Central™
Semiconductor Corp.
145 Adams Avenue, Hauppauge, NY 11788 USA
Tel: (631) 435-1110 • Fax: (631) 435-1824

Manufacturers of World Class Discrete Semiconductors

CMXT3906

SURFACE MOUNT
DUAL PNP SILICON TRANSISTOR

SOT-26 CASE

DESCRIPTION:

The CENTRAL SEMICONDUCTOR CMXT3906 type is a dual PNP silicon transistor manufactured by the epitaxial planar process, epoxy molded in a surface mount package, designed for small signal general purpose amplifier and switching applications. Marking Code is **X2A**.

MAXIMUM RATINGS: (T_A=25°C)

	SYMBOL		UNITS
Collector-Base Voltage	V_{CBO}	40	V
Collector-Emitter Voltage	V_{CEO}	40	V
Emitter-Base Voltage	V_{EBO}	5.0	V
Collector Current	I_C	200	mA
Power Dissipation	P_D	350	mW
Operating and Storage Junction Temperature	T_J,T_{stg}	-65 to +150	°C
Thermal Resistance	Θ_{JA}	357	°C/W

ELECTRICAL CHARACTERISTICS PER TRANSISTOR: (T_A=25°C unless otherwise noted)

SYMBOL	TEST CONDITIONS	MIN	MAX	UNITS
I_{CEV}	V_{CE}=30V, V_{EB}=3.0V		50	nA
BV_{CBO}	I_C=10μA	40		V
BV_{CEO}	I_C=1.0mA	40		V
BV_{EBO}	I_E=10μA	5.0		V
$V_{CE(SAT)}$	I_C=10mA, I_B=1.0mA		0.25	V
$V_{CE(SAT)}$	I_C=50mA, I_B=5.0mA		0.40	V
$V_{BE(SAT)}$	I_C=10mA, I_B=1.0mA	0.65	0.85	V
$V_{BE(SAT)}$	I_C=50mA, I_B=5.0mA		0.95	V
h_{FE}	V_{CE}=1.0V, I_C=0.1mA	60		
h_{FE}	V_{CE}=1.0V, I_C=1.0mA	80		
h_{FE}	V_{CE}=1.0V, I_C=10mA	100	300	
h_{FE}	V_{CE}=1.0V, I_C=50mA	60		
h_{FE}	V_{CE}=1.0V, I_C=100mA	30		

ELECTRICAL CHARACTERISTICS PER TRANSISTOR: continued

SYMBOL	TEST CONDITIONS	MIN	MAX	UNITS
f_T	V_{CE}=20V, I_C=10mA, f=100MHz	250		MHz
C_{ob}	V_{CB}=5.0V, I_E=0, f=1.0MHz		4.5	pF
C_{ib}	V_{BE}=0.5V, I_C=0, f=1.0MHz		10	pF
h_{ie}	V_{CE}=10V, I_C=1.0mA, f=1.0kHz	2.0	12	kΩ
h_{re}	V_{CE}=10V, I_C=1.0mA, f=1.0kHz	0.1	10	$x10^{-4}$
h_{fe}	V_{CE}=10V, I_C=1.0mA, f=1.0kHz	100	400	
h_{oe}	V_{CE}=10V, I_C=1.0mA, f=1.0kHz	3.0	60	μmhos
NF	V_{CE}=5.0V, I_C=100μA, R_S=1.0kΩ f=10Hz to 15.7kHz		4.0	dB
t_d	V_{CC}=3.0V, V_{BE}=0.5V, I_C=10mA, I_{B1}=1.0mA		35	ns
t_r	V_{CC}=3.0V, V_{BE}=0.5V, I_C=10mA, I_{B1}=1.0mA		35	ns
t_s	V_{CC}=3.0V, I_C=10mA, I_{B1}=I_{B2}=1.0mA		225	ns
t_f	V_{CC}=3.0V, I_C=10mA, I_{B1}=I_{B2}=1.0mA		75	ns

SOT-26 CASE - MECHANICAL OUTLINE

TOP VIEW

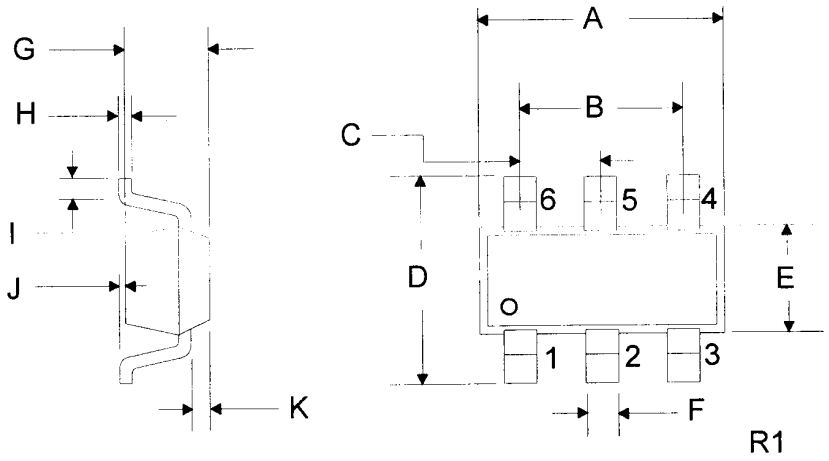

R1

DIMENSIONS				
	INCHES		MILLIMETERS	
SYMBOL	MIN	MAX	MIN	MAX
A	0.110	0.118	2.80	3.00
B	0.074	0.075	1.88	1.92
C	0.037	0.038	0.93	0.97
D	0.102	0.118	2.60	3.00
E	0.059	0.067	1.50	1.70
F	0.016	0.018	0.40	0.45
G	0.039	0.047	1.00	1.20
H	0.004	0.007	0.11	0.19
I	0.016	-	0.40	-
J	-	0.004	-	0.10
K	0.010	0.014	0.25	0.35

SOT-26 (REV: R1)

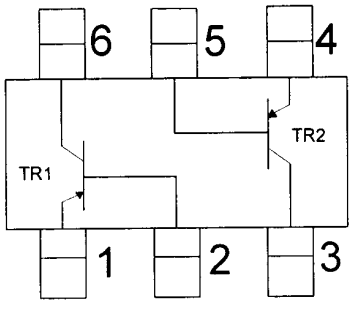

R1

Lead Code:
1) TR1 Emitter
2) TR1 Base
3) TR2 Collector
4) TR2 Emitter
5) TR2 Base
6) TR1 Collector

Central™
Semiconductor Corp.
www.centralsemi.com