CMUT4401 NPN
CMUT4403 PNP

SURFACE MOUNT
COMPLEMENTARY
SILICON TRANSISTORS

ULTRAmini™

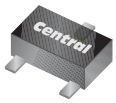

SOT-523 CASE

Central Semiconductor Corp.

www.centralsemi.com

DESCRIPTION:

The CENTRAL SEMICONDUCTOR CMUT4401 and CMUT4403 are complementary silicon transistors manufactured by the epitaxial planar process, epoxy molded in a ULTRAmini™ surface mount package, designed for small signal general purpose amplifier and switching applications.

MARKING CODE: CMUT4401: PC1
CMUT4403: FC2

MAXIMUM RATINGS: (T_A=25°C)	**SYMBOL**	**CMUT4401**	**CMUT4403**	**UNITS**
Collector-Base Voltage	V_{CBO}	60	40	V
Collector-Emitter Voltage	V_{CEO}	40	40	V
Emitter-Base Voltage	V_{EBO}	6.0	5.0	V
Continuous Collector Current	I_C	600		mA
Power Dissipation	P_D	250		mW
Operating and Storage Junction Temperature	T_J, T_{stg}	-65 to +150		°C
Thermal Resistance	Θ_{JA}	500		°C/W

ELECTRICAL CHARACTERISTICS: (T_A=25°C)		**CMUT4401**		**CMUT4403**		
SYMBOL	**TEST CONDITIONS**	**MIN**	**MAX**	**MIN**	**MAX**	**UNITS**
I_{CEV}	V_{CE}=35V, V_{EB}=0.4V	-	0.1	-	0.1	µA
I_{BEV}	V_{CE}=35V, V_{EB}=0.4V	-	0.1	-	0.1	µA
BV_{CBO}	I_C=100µA	60	-	40	-	V
BV_{CEO}	I_C=1.0mA	40	-	40	-	V
BV_{EBO}	I_E=100µA	6.0	-	5.0	-	V
$V_{CE(SAT)}$	I_C=150mA, I_B=15mA	-	0.40	-	0.40	V
$V_{CE(SAT)}$	I_C=500mA, I_B=50mA	-	0.75	-	0.75	V
$V_{BE(SAT)}$	I_C=150mA, I_B=15mA	0.75	0.95	0.75	0.95	V
$V_{BE(SAT)}$	I_C=500mA, I_B=50mA	-	1.2	-	1.3	V
h_{FE}	V_{CE}=1.0V, I_C=0.1mA	20	-	30	-	
h_{FE}	V_{CE}=1.0V, I_C=1.0mA	40	-	60	-	
h_{FE}	V_{CE}=1.0V, I_C=10mA	80	-	100	-	
h_{FE}	V_{CE}=1.0V, I_C=150mA	100	300	-	-	
h_{FE}	V_{CE}=2.0V, I_C=150mA	-	-	100	300	
h_{FE}	V_{CE}=2.0V, I_C=500mA	40	-	20	-	
f_T	V_{CE}=10V, I_C=20mA, f=100MHz	250	-	200	-	MHz
C_{ob}	V_{CB}=5.0V, I_E=0, f=1.0MHz	-	6.5	-	8.5	pF
C_{ib}	V_{BE}=0.5V, I_C=0, f=1.0MHz	-	30	-	30	pF

R1 (9-February 2010)

CMUT4401 NPN
CMUT4403 PNP

SURFACE MOUNT
COMPLEMENTARY
SILICON TRANSISTORS

ELECTRICAL CHARACTERISTICS - Continued: (T_A=25°C)

SYMBOL	TEST CONDITIONS	CMUT4401 MIN	CMUT4401 MAX	CMUT4403 MIN	CMUT4403 MAX	UNITS
h_{ie}	V_{CE}=10V, I_C=1.0mA, f=1.0kHz	1.0	15	1.5	15	kΩ
h_{re}	V_{CE}=10V, I_C=1.0mA, f=1.0kHz	0.1	8.0	0.1	8.0	$x10^{-4}$
h_{fe}	V_{CE}=10V, I_C=1.0mA, f=1.0kHz	40	500	60	500	
h_{oe}	V_{CE}=10V, I_C=1.0mA, f=1.0kHz	1.0	30	1.0	100	μS
t_d	V_{CC}=30V, V_{BE}=2.0V, I_C=150mA, I_{B1}=15mA	-	15	-	15	ns
t_r	V_{CC}=30V, V_{BE}=2.0V, I_C=150mA, I_{B1}=15mA	-	20	-	20	ns
t_s	V_{CC}=30V, I_C=150mA, I_{B1}=I_{B2}=15mA	-	225	-	225	ns
t_f	V_{CC}=30V, I_C=150mA, I_{B1}=I_{B2}=15mA	-	30	-	30	ns

SOT-523 CASE - MECHANICAL OUTLINE

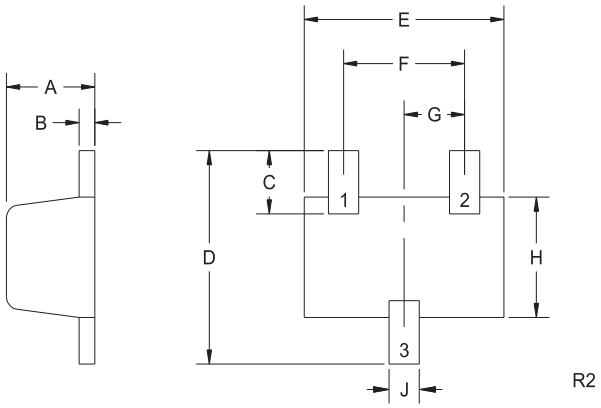

R2

(Bottom View)

DIMENSIONS				
	INCHES		MILLIMETERS	
SYMBOL	MIN	MAX	MIN	MAX
A	0.023	0.031	0.58	0.78
B	0.002	0.008	0.04	0.20
C	0.013	0.021	0.34	0.54
D	0.059	0.067	1.50	1.70
E	0.059	0.067	1.50	1.70
F	0.035	0.043	0.90	1.10
G	0.020		0.50	
H	0.031	0.039	0.78	0.98
J	0.010	0.014	0.25	0.35

SOT-523 (REV: R2)

LEAD CODE:
1) Base
2) Emitter
3) Collector

MARKING CODES:
CMUT4401: PC1
CMUT4403: FC2

R1 (9-February 2010)