PRODUCT BRIEF

CMSH3-100MHV | CMSH3-200MHV
CMSH3-150MHV

3.0A, 100V thru 200V Schottky Rectifiers in the SMB package



SMB

Central Semiconductor's CMSH3-100MHV series of 100V, 150V and 200V high efficiency 3 amp surface mount Schottky rectifiers provide high reverse voltage capability. This makes these devices ideal for use in applications where energy efficiency, power density and small package size are critical design elements.

Features:
- High reverse voltage capability
- Low reverse leakage
- Very low forward voltage
- High surge capability

Applications:
- Reverse polarity protection
- DC-DC output rectification
- Voltage clamping

Benefits:
- Energy effciency
- High reliability
- Space savings
- Industry standard package

Samples:



To order samples of these devices visit:
www.centralsemi.com/info/CMSH3

Typical Electrical Characteristics

Typical Forward Voltage

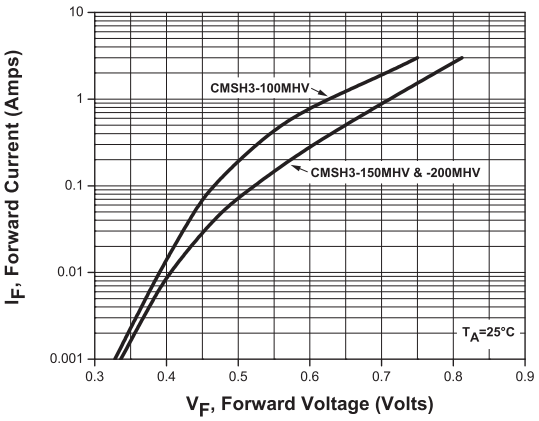

Typical Leakage Current

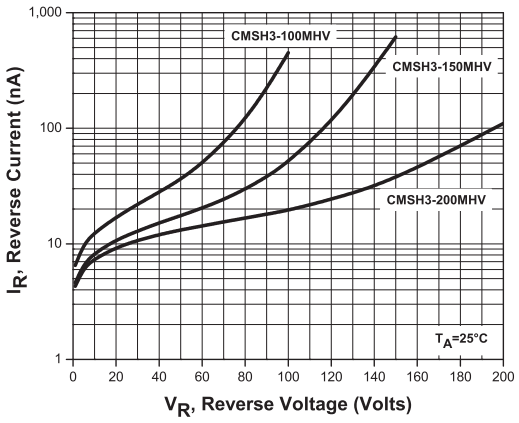

	Maximum Ratings (T_A = 25°C unless otherwise noted)				Electrical Characteristics (T_A = 25°C unless otherwise noted)				
	V_{RRM}	I_O T_L = 125°C	T_J, T_{stg}	I_{FSM}	V_F		@ I_F	I_R *T_J = 100°C	@ V_R
	(V) MAX	(A) MAX	(°C) MAX	(A) MAX	(V) TYP	(V) MAX	(A)	MAX	(V)
CMSH3-100MHV	100	3.0	-65 to +175	80	0.75	0.80	3.0	50µA *20mA	100 100
CMSH3-150MHV	150	3.0	-65 to +175	80	0.81	0.90	3.0	50µA *20mA	150 150
CMSH3-200MHV	200	3.0	-65 to +175	80	0.81	0.90	3.0	50µA *20mA	200 200

Use QR reader for direct link to product web page.
weblink scan

CMSH3-100MHV | CMSH3-200MHV
CMSH3-150MHV

3.0A, 100V thru 200V Schottky Rectifiers in the SMB package

Mechanical Drawing - SMB

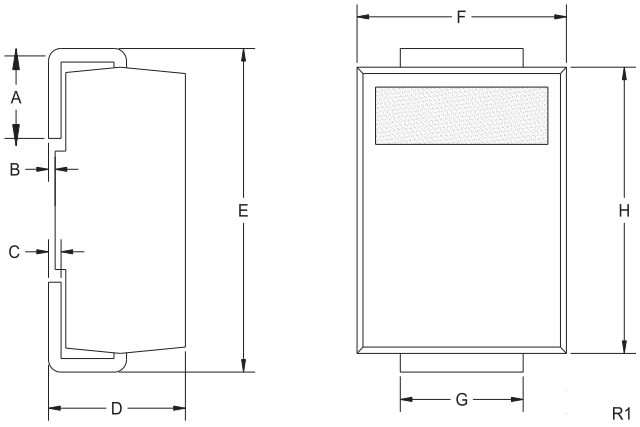

DIMENSIONS				
	INCHES		MILLIMETERS	
SYMBOL	MIN	MAX	MIN	MAX
A	0.030	0.060	0.76	1.52
B	0.004	0.008	0.10	0.20
C	0.006	0.012	0.15	0.30
D	0.086	0.096	2.18	2.44
E	0.200	0.220	5.08	5.59
F	0.130	0.150	3.30	3.81
G	0.077	0.083	1.96	2.11
H	0.160	0.180	4.06	4.57

SMB (REV: R1)

Part Marking

DEVICE	MARKING CODE
CMSH3-100MHV	CS310MHV
CMSH3-150MHV	CS315MHV
CMSH3-200MHV	CS320MHV

Mounting Pad Geometry
(Dimensions in mm)

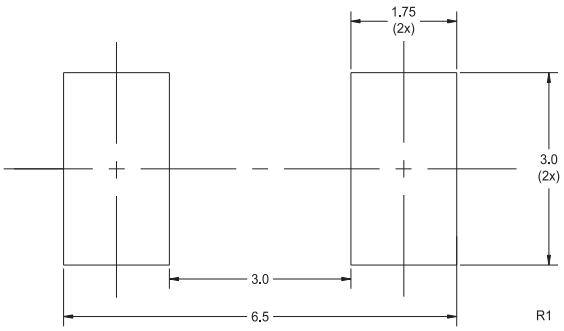

Tape Dimensions and Orientation
(Dimensions in mm)

Tape Width: 12mm

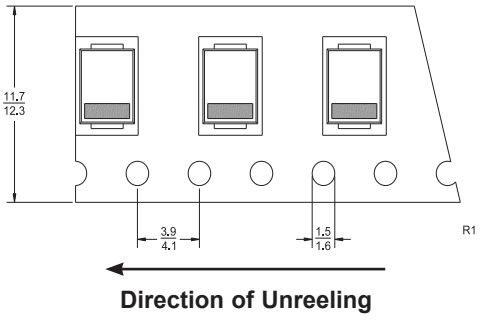

Devices are taped in accordance with Electronic Industries Association Standard EIA-481-1-A

Packaging Base / Ordering Information

Reel Size	Quantity	Central Item No.
13”	3,000 pcs.	CMSH3-100MHV TR13
		CMSH3-150MHV TR13
		CMSH3-200MHV TR13

Reel Packing Information

Reel Size	Reels per Box (Maximum)	Parts per Box (Maximum)	Box Dimensions		Shipping Weight (Max.)	
			INCH	CM	LB	KG
13”	5	15,000	15x4x15	38x10x38	8	4
	14	42,000	15x15x9	38x38x23	21	10
	26	78,000	15x15x18	38x38x46	39	18

Literature



New
SMD SELECTION GUIDE

Order your selection guide today.
Visit: web.centralsemi.com/search/sample.php

Stay up to date on Central’s latest new products:



www.centralsemi.com/subscribe

Central Semiconductor Corp.™ *Innovative Discrete Semiconductors*

For further information contact:
Sales at Central Semiconductor Corp.
(631) 435-1110 or visit:
www.centralsemi.com

145 Adams Avenue • Hauppauge • New York • 11788 • USA • Tel:(631) 435-1110 • Fax:(631) 435-1824