**CMPSH1-4L**

**SURFACE MOUNT**
**SILICON HIGH CURRENT**
**ULTRA LOW $V_F$**
**SCHOTTKY BARRIER RECTIFIER**



**SOT-23F CASE**

**Central™**
**Semiconductor Corp.**

**DESCRIPTION:**

The CENTRAL SEMICONDUCTOR CMPSH1-4L is a high current, ultra low $V_F$, Schottky Barrier Rectifier in a surface mount SOT-23F package. It is suitable for all applications requiring a high current, small sized, operationally efficient Schottky rectifier.

**MARKING CODE: CSL**

**APPLICATIONS:**

- Load/Power Switches
- Power Supply Converter Circuits
- Battery powered equipment including Cell Phones, Digital Cameras, Pagers, PDAs, etc.

**FEATURES:**

- Current ($I_F$=1.0A)
- Low Forward Voltage Drop ($V_F$=0.39V MAX @ 1.0A)
- Low Reverse Current (300μA TYP @ $V_R$=20V)
- Small, surface mount, power SOT-23F package

| **MAXIMUM RATINGS:** ($T_A$=25°C) | **SYMBOL** | | **UNITS** |
|---|---|---|---|
| Continuous Reverse Voltage | $V_R$ | 40 | V |
| Average Peak Forward Current | $I_O$ | 1.0 | A |
| Non Repetitive Forward Current (tp=8.3ms) | $I_{FSM}$ | 20 | A |
| Power Dissipation | $P_D$ | 350 | mW |
| Operating and Storage Junction Temperature | $T_J$, $T_{stg}$ | -65 to +125 | °C |
| Thermal Resistance | $\Theta_{JA}$ | 286 | °C/W |

**ELECTRICAL CHARACTERISTICS:** ($T_A$=25°C unless otherwise noted)

| **SYMBOL** | **TEST CONDITIONS** | **MIN** | **TYP** | **MAX** | **UNITS** |
|---|---|---|---|---|---|
| $I_R$ | $V_R$=20V | | 150 | 900 | μA |
| $I_R$ | $V_R$=30V | | 0.25 | 1.5 | mA |
| $BV_R$ | $I_R$=1.0mA | 40 | | | V |
| $V_F$ | $I_F$=100mA | | 230 | 270 | mV |
| $V_F$ | $I_F$=500mA | | 300 | 340 | mV |
| $V_F$ | $I_F$=1.0A | | 340 | 390 | mV |
| $V_F$ | $I_F$=1.5A | | 390 | 420 | mV |
| $C_T$ | $V_R$=10V, f=1.0MHz | | 50 | | pF |

**Central™**
**Semiconductor Corp.**

**CMPSH1-4L**

**SURFACE MOUNT**
**SILICON HIGH CURRENT**
**ULTRA LOW $V_F$**
**SCHOTTKY BARRIER RECTIFIER**

## SOT-23F CASE - MECHANICAL OUTLINE

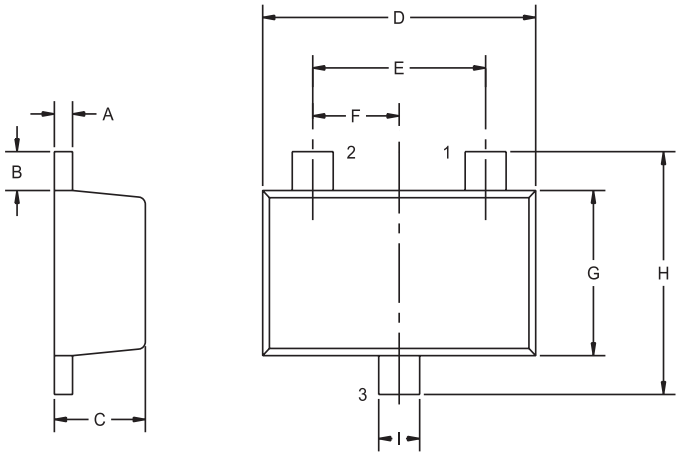


R1

| DIMENSIONS | | | | |
|---|---|---|---|---|
| | INCHES | | MILLIMETERS | |
| SYMBOL | MIN | MAX | MIN | MAX |
| A | 0.004 | 0.008 | 0.10 | 0.20 |
| B | 0.012 | 0.020 | 0.30 | 0.50 |
| C | 0.031 | 0.039 | 0.80 | 1.00 |
| D | 0.110 | 0.118 | 2.80 | 3.00 |
| E | 0.075 | | 1.90 | |
| F | 0.037 | | 0.95 | |
| G | 0.059 | 0.067 | 1.50 | 1.70 |
| H | 0.091 | 0.098 | 2.30 | 2.50 |
| I | 0.014 | 0.018 | 0.35 | 0.45 |

SOT-23F (REV: R1)

## PIN CONFIGURATION

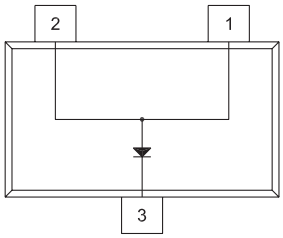


**LEAD CODE:**
1) ANODE
2) ANODE
3) CATHODE

**MARKING CODE: CSL**

## OPTIONAL MOUNTING PADS

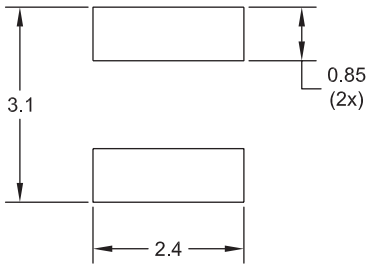


R0

(For standard mounting pads
see SOT-23F Package Details)

R2 (30-September 2008)