CMD236C4

DC-18 GHz SP6T Non-reflective Switch

Features

- Low loss broadband performance
- High isolation
- Non-reflective design
- Integrated 3:8 TTL decoder
- Pb-free RoHs compliant 4x4 SMT package

Description

The CMD236C4 is a broadband MMIC SP6T switch housed in a leadless 4x4 mm surface mount package. The CMD236C4 covers DC to 18 GHz and offers a low insertion loss of 2.5 dB and high isolation of 42 dB at 10 GHz. The switch also includes an on board binary decoder circuit which reduces the number of required logic control lines from five to three. The CMD236C4 operates using complementary control voltage logic lines of 0/-5 V and consumes little DC current.

Functional Block Diagram

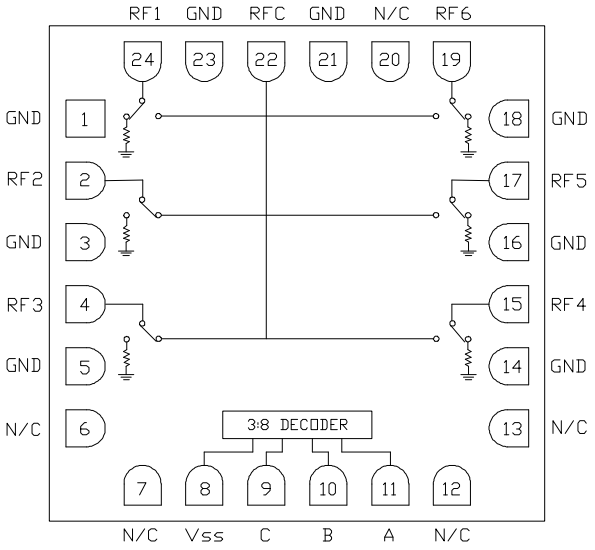

Electrical Performance - V_{ctl} = 0/-5 V, Vss = -5 V, T_A = 25 °C, F = 10 GHz

Parameter	Min	Typ	Max	Units
Frequency Range		DC - 18		GHz
Insertion Loss		2.5		dB
Isolation		42		dB
Return Loss - On State		9		dB
Return Loss RF1, 2, 3, 4, 5, 6 - Off State		9		dB
Input P0.1dB		18		dBm
Switching Speed		60		ns

ver 1.0 0318

Custom MMIC
300 Apollo Drive Chelmsford, MA 01824 Phone (978) 467-4290 Fax (978) 467-4294
Visit us online at www.custommmic.com

CMD236C4

DC-18 GHz SP6T Non-reflective Switch

Specifications

Absolute Maximum Ratings

Parameter	Rating
RF Input Power	+27 dBm
Bias Voltage (Vss)	-7V
Control Voltage Range (A,B)	+0.5V to -7.5V
Channel Temperature, Tch	150 °C
Thermal Resistance, Θjc	64.1 °C/W
Operating Temperature	-40 to 85 °C
Storage Temperature	-55 to 150 °C

Exceeding any one or combination of the maximum ratings may cause permanent damage to the device.

Bias Voltage & Current

Vss Range = -5.0V ± 10%		
Vss (V)	Iss (Typ) (mA)	Iss (Max) (mA)
-5	9	18

TTL/CMOS Control Voltages

State	Bias Condition
Low	-1V to 0V @ 1 mA Typ
High	-7V to -3V @ 1 uA Typ

Truth Table

Control Input			Signal Path State
A	B	C	RFC to:
High	High	High	RF1
Low	High	High	RF2
High	Low	High	RF3
Low	Low	High	RF4
High	High	Low	RF5
Low	High	Low	RF6
Low	Low	Low	All OFF *

* RFC is reflective in All Off state

Electrical Specifications - V_{ctl} = 0/-5 V, Vss = -5 V T_A = 25 °C

Parameter	Min	Typ	Max	Min	Typ	Max	Min	Typ	Max	Units
Frequency Range	DC - 6			DC - 14			DC - 18			GHz
Insertion Loss		2.5	3		2.8	3.3		3.5	4.3	dB
Isolation	42	47		31	36		29	35		dB
Return Loss - On State		12			9			10		dB
Return Loss - Off State		12			9			8		dB
Input P0.1dB		16			16			16		dBm
Input IP3		34			34			34		dBm
Switching Speed		60			60			60		ns

Custom MMIC
300 Apollo Drive Chelmsford, MA 01824 Phone (978) 467-4290 Fax (978) 467-4294
Visit us online at www.custommmic.com

Typical Performance

Insertion Loss vs. Temperature

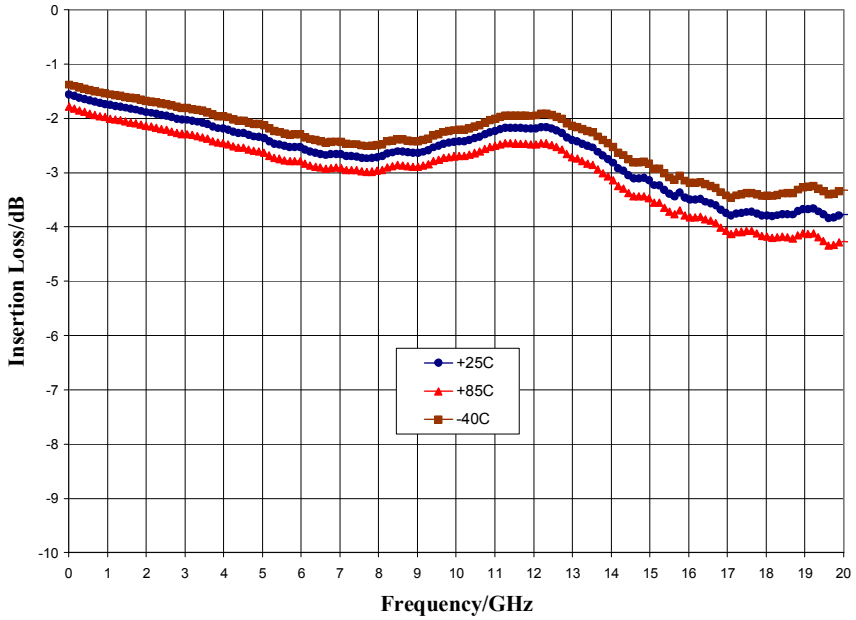

Return Loss

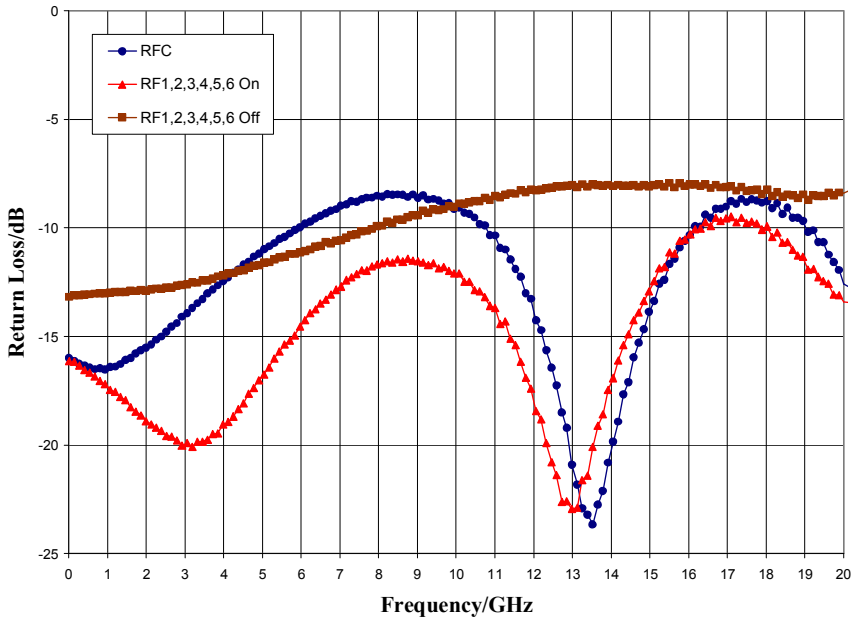

Custom MMIC
300 Apollo Drive Chelmsford, MA 01824 Phone (978) 467-4290 Fax (978) 467-4294
Visit us online at www.custommmic.com

Typical Performance

Isolation Between Ports RFC and RF1/RF2/RF3/RF4/RF5/RF6

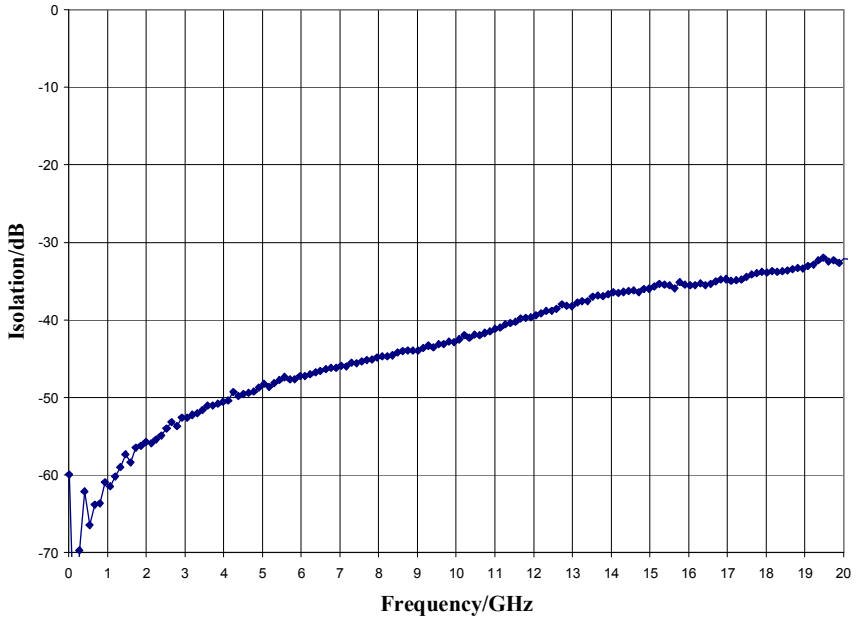

Input P0.1dB Compression Point vs. Temperature

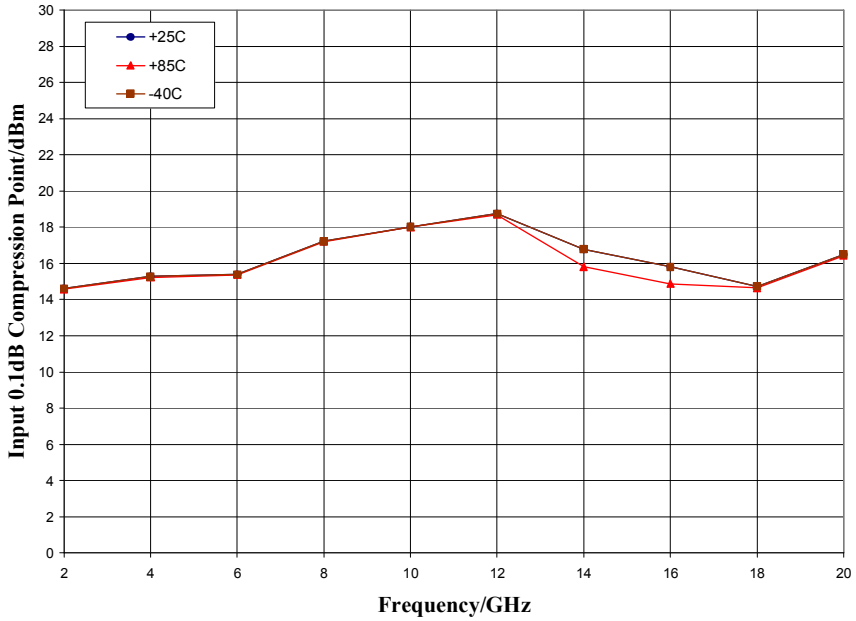

Custom MMIC
300 Apollo Drive Chelmsford, MA 01824 Phone (978) 467-4290 Fax (978) 467-4294
Visit us online at www.custommmic.com

Typical Performance

Input Third Order Intercept Point vs. Temperature

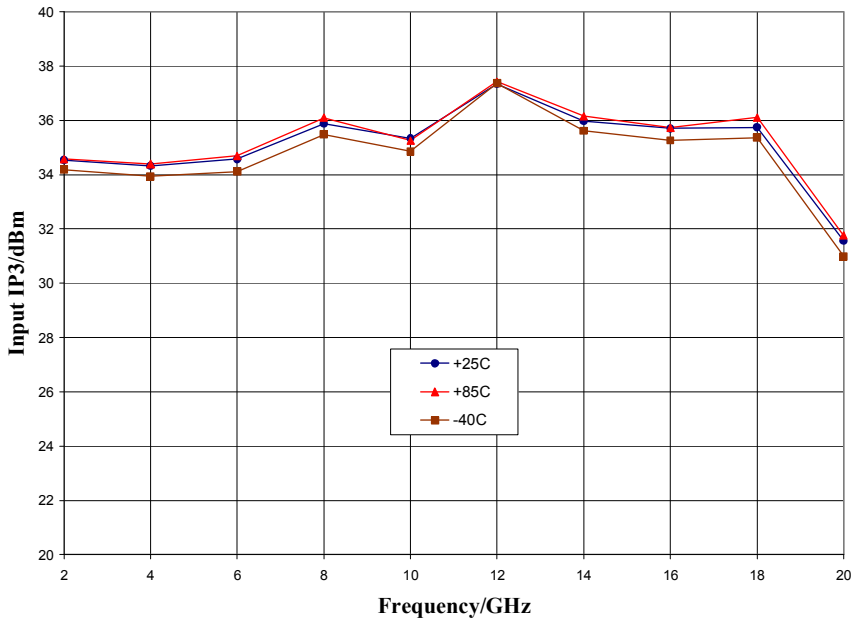

Return Loss, All Off State

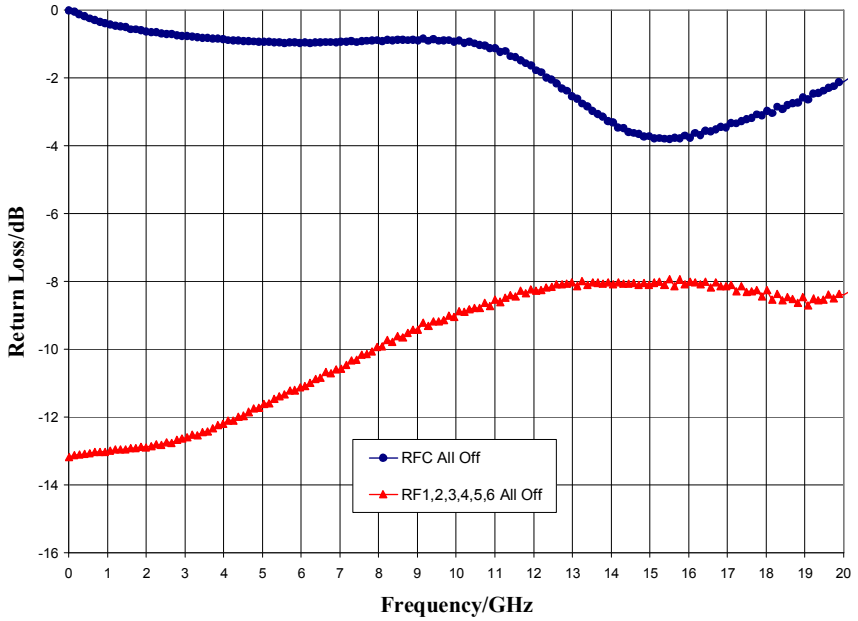

Custom MMIC
300 Apollo Drive Chelmsford, MA 01824 Phone (978) 467-4290 Fax (978) 467-4294
Visit us online at www.custommmic.com

Mechanical Information

Package Information and Dimensions

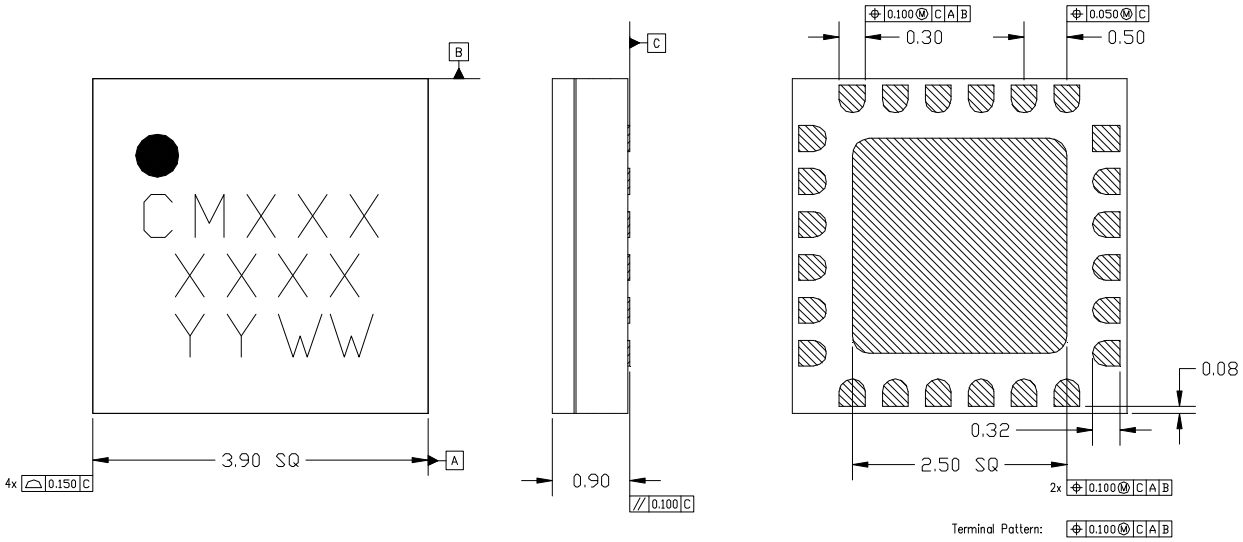

NOTES:
1. ALL DIMENSIONS SHOWN IN mm.
2. MATERIAL: BLACK ALUMINA
3. LEAD FINISH:
   3.1. Ni: 8.89um MAX, 1.27um MIN
   3.2. Pd: 0.17um MAX, 0.07um MIN
   3.3. Au: 0.254um MAX, 0.03um MIN
4. MARKING
   4.1. LINE 1: PART NUMBER
      4.1.1. EXAMPLE: CMD191C4 SHALL BE MARKED AS CM191
   4.2. LINE 2: LOT NUMBER
   4.3. LINE 3: DATE CODE - LAST 2 DIGITS OF THE YEAR OF MANUFACTURE FOLLOWED BY A 2 DIGIT WEEK CODE
5. ALTERNATE PIN #1 IDENTIFIER IS A SINGLE SQUARE PAD
6. ALTERNATE DIE PADDLE MAY HAVE CHAMFERED CORNERS

Recommended PCB Land Pattern

Custom MMIC Design Services recommends that the user develop the land pattern that will provide the best design for proper solder reflow and device attach for their specific application. Please review Custom MMIC Application Note AN 105 for a recommended land pattern approach.

Recommended Solder Reflow Profile

Custom MMIC Design Services recommends screen printing with belt furnace reflow to ensure proper solder reflow and device attach. Please review Custom MMIC Application Note AN 102 for a recommended solder reflow profile.

Custom MMIC
300 Apollo Drive Chelmsford, MA 01824 Phone (978) 467-4290 Fax (978) 467-4294
Visit us online at www.custommmic.com

Pin Description

Pin Diagram

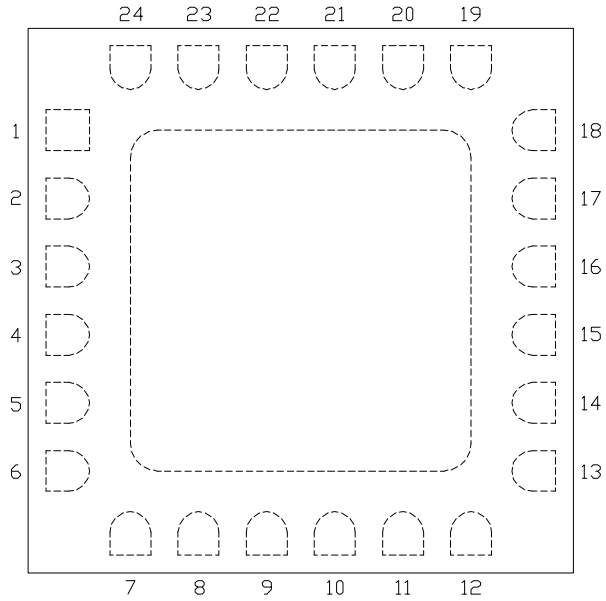

Functional Description

Pin	Function	Description	Schematic
1,3,5,14,16, 18,21,23 and die paddle	Ground	Connect to RF/DC ground	
6, 7,12,13,20	N/C	No connection required. These pins may be connected to RF/DC ground	
2,4,15,17, 19,22,24	RF2, RF3, RF4, RF5, RF6, RFC, RF1	These pins are DC coupled and matched to 50 Ohm. Blocking capacitors are required if RF line potential is not equal to 0V	
8	Vss	Power supply voltage	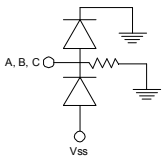
9	CTLC	See truth table and control voltage table	
10	CTLB	See truth table and control voltage table	
11	CTLA	See truth table and control voltage table	

Custom MMIC
300 Apollo Drive Chelmsford, MA 01824 Phone (978) 467-4290 Fax (978) 467-4294
Visit us online at www.custommmic.com

Applications Information

Evaluation Board

The circuit board shown has been developed for optimized assembly at Custom MMIC. A sufficient number of via holes should be used to connect the top and bottom ground planes. As surface mount processes vary, careful process development is recommended.

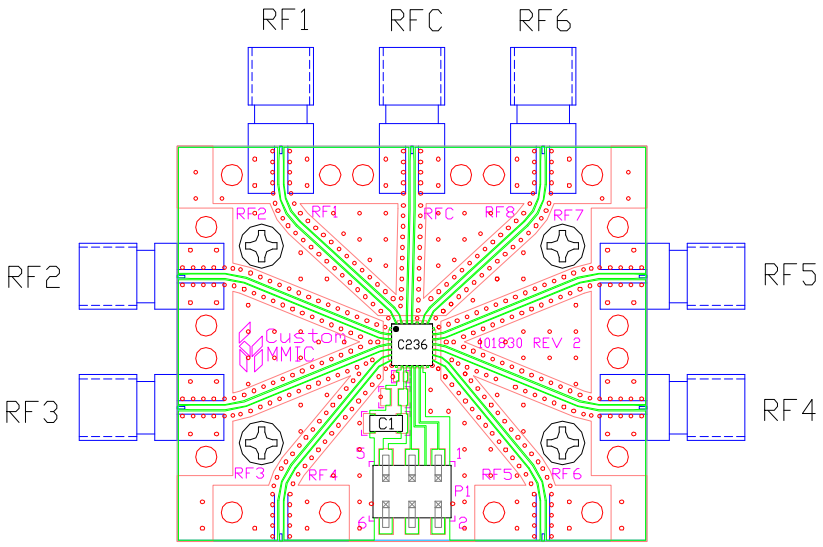

P2	DESCRIPTION
1	A
2	GND
3	C
4	B
5	Vss
6	GND

Bill of Material

Designator	Value	Description
J1 - J7		SMA End Launch Connector
P1		6 Pin Header
C1	0.33 µF	Capacitor, Tantalum
U1		CMD236C4 SP6T Switch
PCB		101830 Evaluation PCB

GaAs MMIC devices are susceptible to damage from Electrostatic Discharge. Proper precautions should be observed during handling, assembly and test.

Custom MMIC
300 Apollo Drive Chelmsford, MA 01824 Phone (978) 467-4290 Fax (978) 467-4294
Visit us online at www.custommmic.com