Type: CMD-6LR

◆ Product Description

- 8.3×8.3mm Max.(L×W), 5.2mm Max. Height.
- In addition to the typical versions of parameters shown here, custom designs are available to meet your exact requirements.

◆ Feature

- Magnetically shielded construction.
- Ideally used in portable devices such as DSC/DVC,MP3,PDA, etc as DC-DC Converter inductors, especially suitable for White LED drive.
- RoHS Compliance

◆ Dimensions (mm)

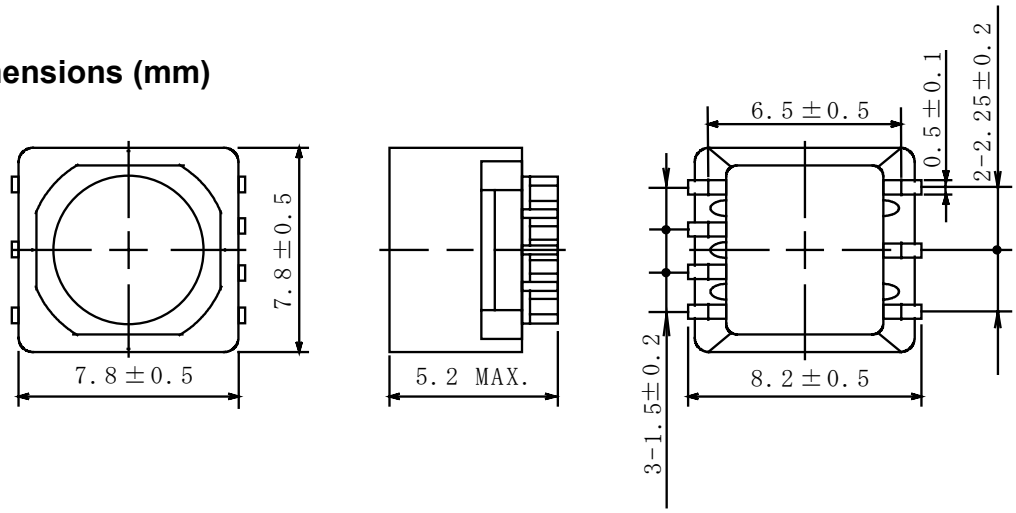

◆ Schematics (Bottom)

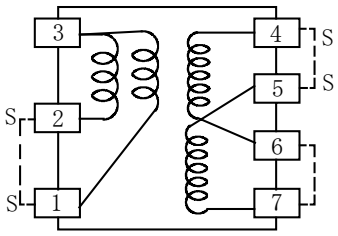

"S" is winding start.

◆ Land Pattern (mm)

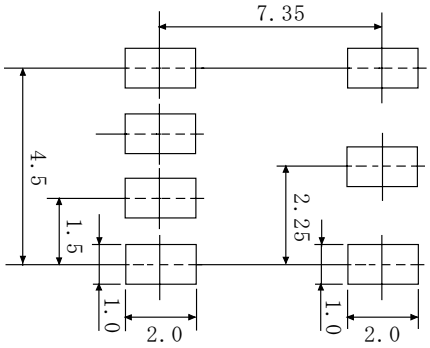

◆ Specification

Sample No.	Inductance (4-6) 1kHz/1V	D.C.R. (4-6)
6316-T002	396μH ± 40%	2.49Ω Max.