SOT-23 Formed SMD Package

CMBTA13
CMBTA14

N–P–N SMALL–SIGNAL DARLINGTON TRANSISTORS

N–P–N transistors

Marking
CMBTA13 = 1M
CMBTA14 = 1N

PACKAGE OUTLINE DETAILS
ALL DIMENSIONS IN mm

Pin configuration
1 = BASE
2 = EMITTER
3 = COLLECTOR

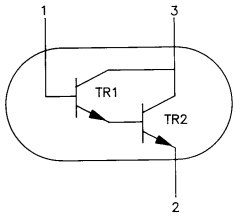

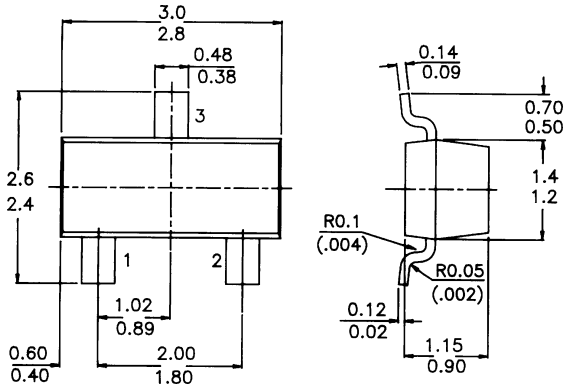

ABSOLUTE MAXIMUM RATINGS

Collector–emitter voltage (open base)					
V_{BE} = 0		V_{CES}	max.	30	V
Collector current (d.c.)		I_C	max.	300	mA
Total power dissipation up to T_{amb} = 25°C		P_{tot}	max.	250	mW
Junction temperature		T_j	max.	150	°C
D.C. current gain					
I_C = 10 mA; V_{CE} = 5 V	CMBTA13	h_{FE}	min.	5000	
	CMBTA14	h_{FE}	min.	10000	
Transition frequency at f = 100 MHz					
I_C = 10 mA; V_{CE} = 5 V		f_T	min.	125	MHz

RATINGS *(at T_A = 25°C unless otherwise specified)*

Limiting values				
Collector–base voltage (open emitter)				
V_{BE} = 0	V_{CBO}	*max.*	*30*	*V*
Collector–emitter voltage (open base)				
V_{BE} = 0	V_{CES}	*max.*	*30*	*V*
Emitter–base voltage (open collector)	V_{EBO}	*max.*	*10*	*V*
Collector current (d.c.)	I_C	*max.*	*300*	*mA*
Total power dissipation up to T_{amb} = 25°C	P_{tot}	*max.*	*250*	*mW*
Storage temperature	T_{stg}	*–55 to +150*		*°C*
Junction temperature	T_j	*max.*	*150*	*°C*

THERMAL RESISTANCE

from junction to ambient	$R_{th\ j-a}$		*500*	K/W

CHARACTERISTICS *(at T_A = 25°C unless otherwise specified)*

Collector–emitter breakdown voltage					
I_C = 100 µA		$V_{(BR)CES}$	*min.*	*30*	*V*
Emitter–base cut–off current					
V_{BE} = 10 V		I_{EBO}	*max.*	*0.1*	µA
Collector–base cut–off current					
V_{CB} = 30 V		I_{CBO}	*max.*	*0.1*	µA
D.C. current gain					
I_C = 10 mA; V_{CE} = 5 V	*CMBTA13*	h_{FE}	*min.*	*5000*	
	CMBTA14	h_{FE}	*min.*	*10000*	
I_C = 100 mA; V_{CE} = 5 V	*CMBTA13*	h_{FE}	*min.*	*10000*	
	CMBTA14	h_{FE}	*min.*	*20000*	
Collector–emitter saturation voltage					
IC = 100 mA; I_B = 0.1 mA		V_{CEsat}	*max.*	*1.5*	*V*
Base–emitter On voltage					
I_C = 100 mA; V_{CE} = 5 V;		$V_{BE(on)}$	*max.*	*2*	*V*
Transition frequency at f = 100 MHz					
I_C = 10 mA; V_{CE} = 5 V		f_T	*min.*	*125*	MHz

Customer Notes

Disclaimer

The product information and the selection guides facilitate selection of the CDIL's Discrete Semiconductor Device(s) best suited for application in your product(s) as per your requirement. It is recommended that you completely review our Data Sheet(s) so as to confirm that the Device(s) meet functionality parameters for your application. The information furnished on the CDIL Web Site/ CD are believed to be accurate and reliable. CDIL however, does not assume responsibility for inaccuracies or incomplete information. Furthermore, CDIL does not assume liability whatsoever, arising out of the application or use of any CDIL product; neither does it convey any license under its patent rights nor rights of others. These products are not designed for use in life saving/support appliances or systems. CDIL customers selling these products (either as individual Discrete Semiconductor Devices or incorporated in their end products), in any life saving/support appliances or systems or applications do so at their own risk and CDIL will not be responsible for any damages resulting from such sale(s).

CDIL strives for continuous improvement and reserves the right to change the specifications of its products without prior notice.

CDIL is a registered Trademark of
Continental Device India Limited
C-120 Naraina Industrial Area, New Delhi 110 028, India.
Telephone + 91-11-2579 6150, 5141 1112 Fax + 91-11-2579 5290, 5141 1119
email@cdil.com www.cdilsemil.com