# CMB120-3 Technical Data Sheet

## On/Off, Floating Point, Non-Spring Return, AC 100…240 V




**Torque min. 18 in-lb, for control of damper surfaces up to 4.5 sq. ft.**

### Application

Damper actuator for operating air control dampers in ventilation and air-conditioning systems for building services installations.

- For air control dampers up to approximately 4.5 sq ft
- Torque 2 Nm
- Nominal voltage AC/DC 100-240 V
- Control: Open-close or 3-point
- Running time 35 sec. @ 90°

### Operation

Simple direct mounting on the damper spindle with a universal spindle clamp or form fit, supplied with an anti-rotation bracket to prevent the actuator from rotating.

Manual operation is possible with a magnet (the gearing latch remains disengaged as long as the magnet is in place).

Adjustable angle of rotation with mechanical end stops, that requires no tools to move or remove.

The actuator is overload-proof, requires no limit switches and automatically stops when the end stops is reached.

The CM actuator uses a brushless DC motor, which is controlled by an Application Specific Integrated Circuit (ASIC). The ASIC monitors and controls the actuator's rotation sensing (DRS) function to prevent damage to the actuator in a stall condition. Power consumption is reduced in holding mode.

Belimo's Halomo sensorless brushless DC motor spins by reversing the poles of stationary electromagnets housed inside rotational permanent magnets. The electromagnetic poles are switched by the an ASIC developed by Belimo. Unlike the conventional DC motor, there are no brushes to wear or commutators to foul. This means the brushless DC motor adds accuracy and reduces power consumption in a holding mode.

| Technical Data | |
|---|---|
| Power Supply | 100...240 VAC, -15% / +10%, 50/60 Hz |
| Power consumption in operation | 1.5 W |
| Power consumption in rest position | 1 W |
| Transformer sizing | 3.5 VA (class 2 power source) |
| Shaft Diameter | 1/4...1/2" round, centers on 3/8" |
| Electrical Connection | 18 GA appliance cable, 3 ft [1 m], with 1/2" conduit connector |
| Overload Protection | electronic throughout full rotation |
| Angle of rotation | 0...287.5°, Without limitation: endless<br>With one end stop clip Z-ESCM: 315° |
| Torque motor | 18 in-lb [2 Nm] |
| Direction of motion motor | by electrical installation |
| Position indication | Mechanically, 30...65 mm stroke |
| Manual override | disengage with magnet |
| Running Time (Motor) | 35 s, constant, independent of load |
| Ambient humidity | max. 95% r.H., non-condensing |
| Ambient temperature | -22...122°F [-30...50°C] |
| Storage temperature | -40...176°F [-40...80°C] |
| Degree of Protection | IP54, NEMA 2, UL Enclosure Type 2 |
| Housing material | UL94-5VA |
| Agency Listing | cULus acc. to UL60730-1A/-2-14, CAN/CSA E60730-1:02, CE acc. to 2014/30/EU and 2014/35/EU |
| Noise level, motor | 45 dB(A) |
| Servicing | maintenance-free |
| Quality Standard | ISO 9001 |
| Weight | 0.61 lb [0.28 kg] |

†Rated Impulse Voltage 2.5kV, Type of Action 1.AA, Control Pollution Degree 3.

**Dimensions (Inches[mm])**

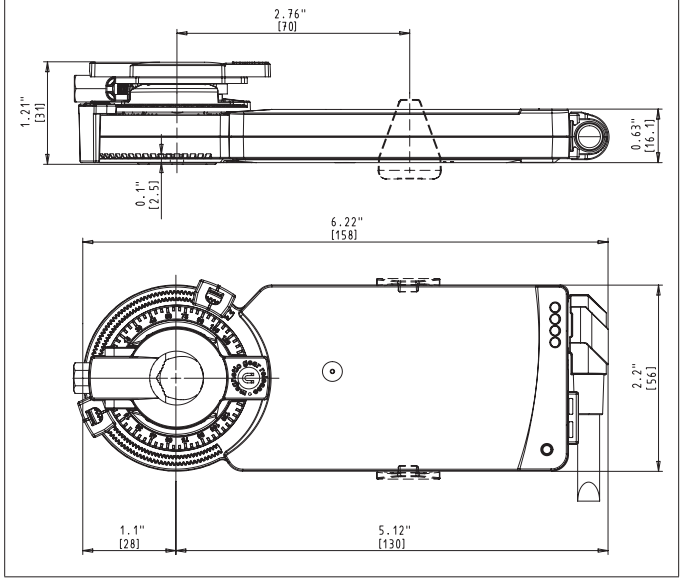


Date created, 02/10/2020 - Subject to change. © Belimo Aircontrols (USA), Inc.

# CMB120-3 Technical Data Sheet

## On/Off, Floating Point, Non-Spring Return, AC 100…240 V

### Typical Specification

Proportional control damper actuators shall be electronic direct-coupled type, which require no crank arm and linkage and be capable of direct mounting to a shaft from 1/4" to 1/2" diameter. Actuators must provide proportional damper control response to a 2 to 10 VDC or, with the addition of a 500Ω resistor, a 4 to 20 mA control input from an electronic controller or positioner. Actuators shall have brushless DC motor technology and be protected from overload at all angles of rotation. Actuators shall have manual override on the cover. Run time shall be constant and independent of torque. Actuators shall be cULus listed, have a 5-year warranty, and be manufactured under ISO 9001 International Quality Control Standards. Actuators shall be as manufactured by Belimo.

### Wiring Diagrams

A Actuators with appliance cables are numbered.

1 Provide overload protection and disconnect as required.

11 Actuators may be connected in parallel if not mechanically linked. Power consumption and input impedance must be observed.

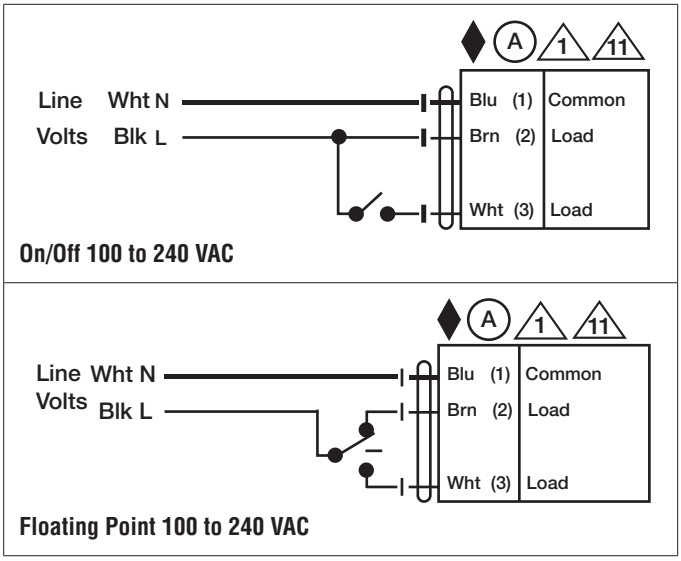


**On/Off 100 to 240 VAC**

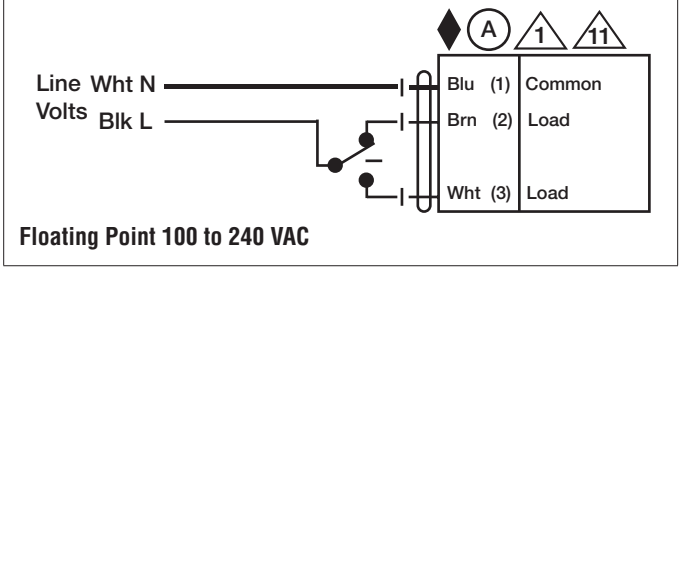


**Floating Point 100 to 240 VAC**

Date created, 02/10/2020 - Subject to change. © Belimo Aircontrols (USA), Inc.