1.0 Amp Dual Mode Low-Dropout CMOS Regulator

Features

- Internally fixed or adjustable output modes
- 250mV dropout at 1.0A load current
- Operates from 1.7V to 5.5V input supply
- Low Ground current (330µA at 1.0A Load)
- Minimal output capacitance required
- Stable with low ESR ceramic output capacitors
- Current limit protection
- Thermal overload protection
- Reverse current protection in shutdown
- Thermally enhanced 8-lead SOIC package
- Lead-free version available

Applications

- Low-voltage "Core" processors
- Set top boxes
- DVD players
- Personal video recorders
- Graphics Cards
- Gigabit NIC Cards
- PC Motherboards
- Notebooks

Product Description

The CM3004 is a very-low-dropout regulator that offers both fixed output and fixed/adjustable operating modes. When the Adjust control pin (ADJ) is grounded, this device automatically enters a fixed voltage mode delivering 2.5V out at 1.0A. When the Adjust pin is connected to an external resistor network the device automatically operates as an adjustable regulator. The Adjust pin can also be tied directly to the OUT pin which configures the CM3004 as a 1.2V regulator.

An Enable control pin (EN) allows the device to be placed in a low-current mode.

The CM3004 is fully protected, offering both overload current limiting, short-circuit protection and high-temperature thermal shutdown. The CM3004 also includes protection against output to input current flow while in shutdown.

The CM3004 is supplied in a space-saving, 8-lead power SOIC package which has been thermally enhanced via an integral leadframe to ensure maximum junction-to-ambient power dissipation. The CM3004 is also available with optional lead-free finishing.

Typical Application Circuits

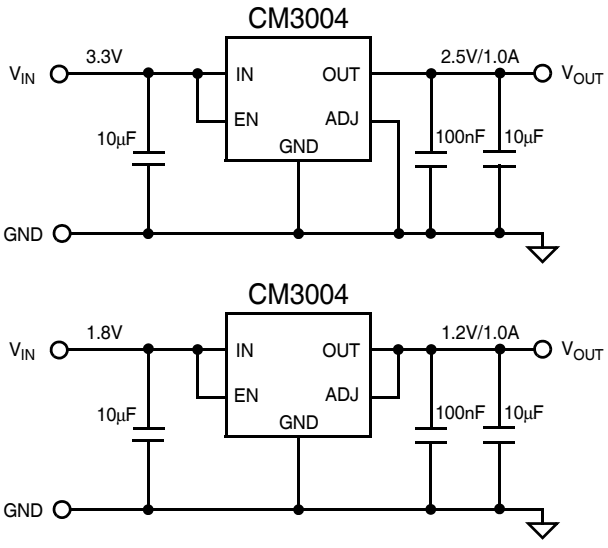

Simplified Electrical Schematic

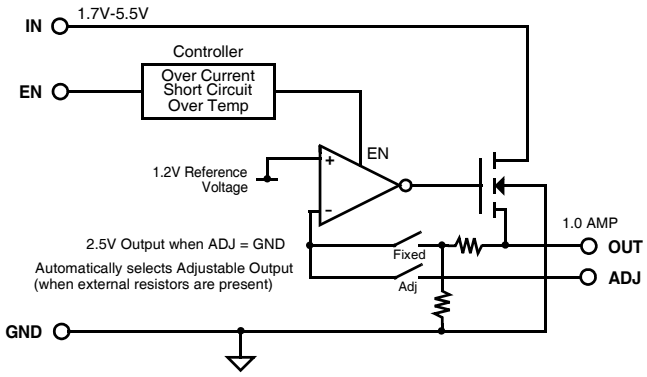

© 2004 California Micro Devices Corp. All rights reserved.

PACKAGE / PINOUT DIAGRAM

TOP VIEW

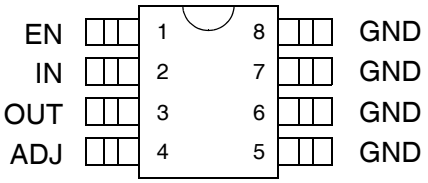

8-Lead Power SOIC

Note: This drawing is not to scale.

PIN DESCRIPTIONS

LEAD(S)	NAME	DESCRIPTION
1	EN	Enable/shutdown input. When EN is asserted high ($V_{EN} \geq 1.2V$), the regulator is enabled. When EN is asserted low ($V_{EN} \leq 0.4V$), the regulator is shut down.
2	IN	Positive input voltage for the regulator. If this input pin is greater than 2 inches from the main input filter, a 10µF ceramic capacitor is recommended for adequate filtering.
3	OUT	The regulated voltage output. An output capacitor of 10µF is recommended to minimize any transient load disturbances under normal operating conditions. Additional output capacitance can be used to further improve transient load response.
4	ADJ	Feedback input. When ADJ is grounded, the device enters fixed voltage mode. When ADJ is connected to an external resistor network, the device operates as an adjustable regulator. The Adjust pin can also be tied directly to the OUT pin which configures the CM3004 as a 1.2V regulator.
5-8	GND	The negative reference for all voltages. Also functions as a thermal path for heat dissipation.

Ordering Information

PART NUMBERING INFORMATION

		Standard Finish		Lead-free Finish	
Leads	Package	Ordering Part Number[1]	Part Marking	Ordering Part Number[1]	Part Marking
8	SOIC-8	CM3004-25SA	CM3004 25SA	CM3004-25SF	CM3004 25SF

Note 1: Parts are shipped in Tape & Reel form unless otherwise specified.

© 2004 California Micro Devices Corp. All rights reserved.

Specifications

ABSOLUTE MAXIMUM RATINGS		
PARAMETER	**RATING**	**UNITS**
ESD Protection (HBM)	± 2000	V
Pin Voltages IN, OUT, ADJ, EN	[GND - 0.4] to +6.0	V
Storage Temperature Range	-40 to +150	°C
Operating Temperature Range Junction	-40 to +150	°C
Power Dissipation (See note 1)	Internally Limited	W

Note 1: The SOIC package used is thermally enhanced through the use of a fused integral leadframe. The power rating is based on a printed circuit board heat spreading capability equivalent to 2 square inches of copper connected to the GND pins. Typical multi-layer boards using power plane construction will provide this heat spreading ability without the need for additional dedicated copper area. (Please consult with factory for thermal evaluation assistance)

STANDARD OPERATING CONDITIONS		
PARAMETER	**VALUE**	**UNITS**
V_{IN}	1.7 to 5.5	V
Ambient Operating Temperature Range	-40 to +85	°C
Load Current	0 to 1000	mA
C_{EXT}	10 ± 20%	µF

© 2005 California Micro Devices Corp. All rights reserved.

Specifications (cont'd)

ELECTRICAL OPERATING CHARACTERISTICS (SEE NOTE 1)						
SYMBOL	**PARAMETER**	**CONDITIONS**	**MIN**	**TYP**	**MAX**	**UNITS**
V_{OUT}	Regulator Output Voltage	0mA < I_{LOAD} < 1.0A, V_{IN}=3.3V, V_{ADJ}=0V	2.40	2.50	2.60	V
		0mA < I_{LOAD} < 1.0A, V_{IN}=1.8V, V_{ADJ}=V_{OUT}	1.15	1.20	1.25	V
I_{LIM}	Overload Current Limit	V_{IN}=3.3V,V_{OUT} = 2.5V	2.2	3.0	3.8	A
I_{SC}	Short Circuit Current Limit	V_{OUT} < 0.2V	0.5	1.2	1.8	A
$V_{R\ LOAD}$	Load Regulation	V_{IN}=3.3V,V_{OUT} = 2.5V, 100mA ≤ I_{LOAD} ≤ 1.0A		5	20	mV
		V_{IN}=1.8V,V_{OUT} = 1.2V, 100mA ≤ I_{LOAD} ≤ 1.0A		5	20	mV
$V_{R\ LINE}$	Line Regulation	3.0V ≤ V_{IN} ≤ to 5.0V, V_{OUT} = 2.5V, I_{LOAD} = 5mA		5	20	mV
		1.7V ≤ V_{IN} ≤ to 3.5V, V_{OUT} = 1.2V, I_{LOAD} = 5mA		5	20	mV
$V_{DROPOUT}$	Dropout Voltage	I_{LOAD} = 100mA I_{LOAD} = 1.0A		25 250	45 450	mV mV
I_{GND}	Ground Current	EN tied to GND, V_{IN}=3.3V EN=V_{IN}=3.3V, V_{OUT} = 2.5V, I_{LOAD}= 0mA EN=V_{IN}=3.3V, V_{OUT} = 2.5V, I_{LOAD}= 1.0A		5 325 330	30 500 550	µA µA µA
I_{ROUT}	Output Reverse Leakage	V_{OUT}=3.3V; V_{IN} = 0V		30	100	µA
$T_{DISABLE}$ T_{HYST}	Shutdown Temperature Thermal Hysteresis			160 25		°C °C
Enable Pin Input						
V_{EN_TH}	EN Input Threshold Voltage	Regulator Enabled	0.4	0.8	1.2	V
I_{EN}	Enable Input Leakage Current	0V < V_{EN} < 5.5V		0.1	5	µA
Adjust Pin Input (output set by external resistors)						
V_{ADJ_TH}	ADJ Input Threshold Voltage		0.1	0.2	0.3	V
I_{ADJ}	ADJ Input Leakage Current	V_{ADJ} > 1.1V		0.1	1	µA

Note 1: Operating Characteristics are over Standard Operating Conditions unless otherwise specified.

© 2004 California Micro Devices Corp. All rights reserved.

Performance Information

Typical DC Characteristics nominal conditions unless specified otherwise)

Nominal Conditions: C_{IN} = 10µF, C_{OUT} = 10µF

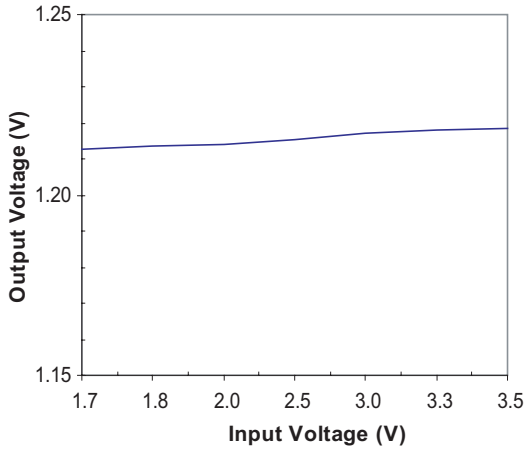

Figure 1. Line Regulation, (I_{LOAD}=5mA)

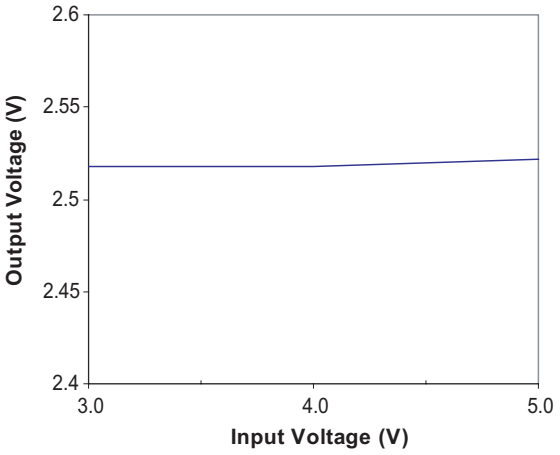

Figure 4. Line Regulation, (I_{LOAD}=5mA)

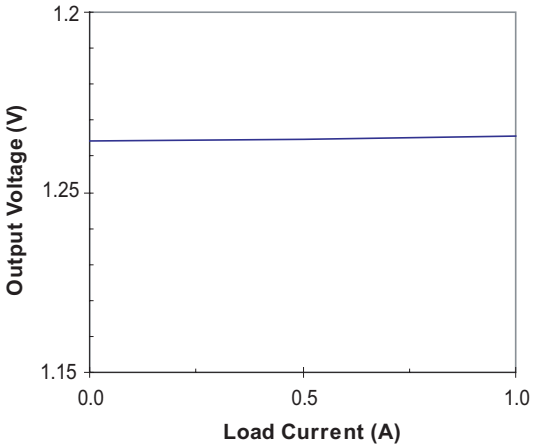

Figure 2. Load Regulation (V_{IN} = 1.8V)

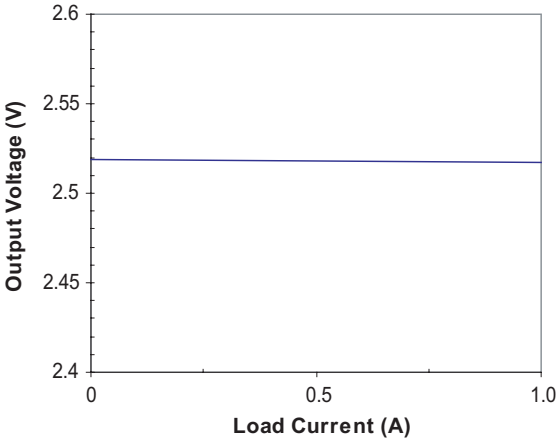

Figure 5. Load Regulation (V_{IN} = 3.3V)

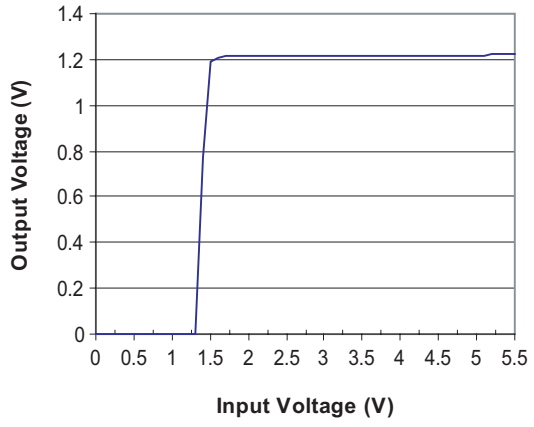

Figure 3. Operating Voltage Range (V_{OUT} = 1.2V)

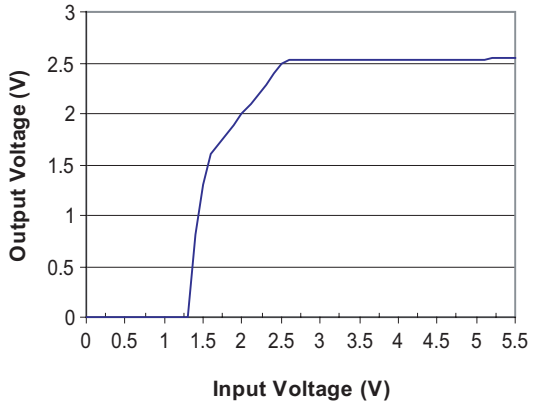

Figure 6. Operating Voltage Range (V_{OUT} = 2.5V)

© 2005 California Micro Devices Corp. All rights reserved.

Performance Information (cont'd)

Typical Transient Characteristics (nominal conditions unless specified otherwise)

Nominal Conditions: C_{IN} = 10µF, C_{OUT} = 10µF

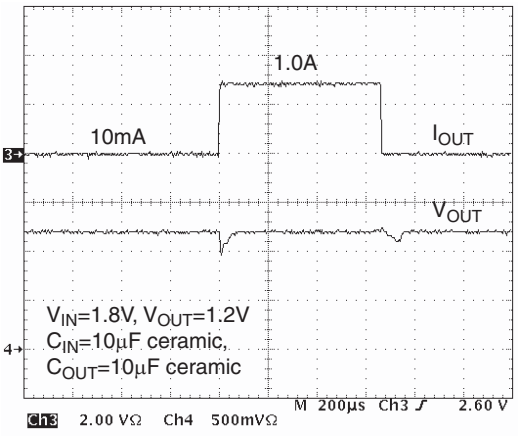

Figure 7. Load Transient Step Response

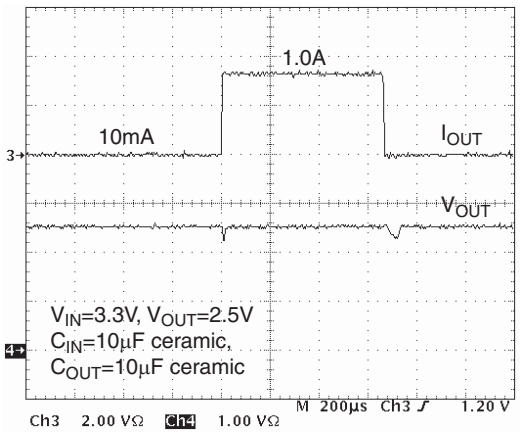

Figure 10. Load Transient Step Response

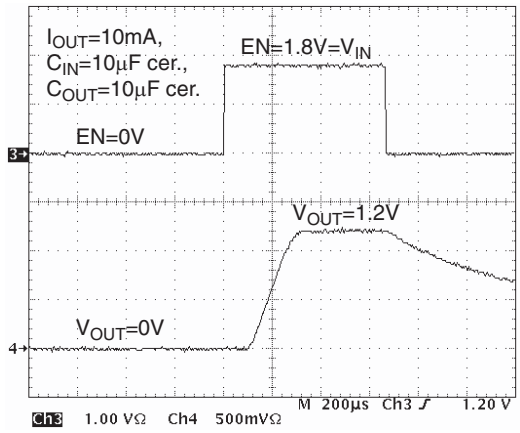

Figure 8. Enable/Disable Response

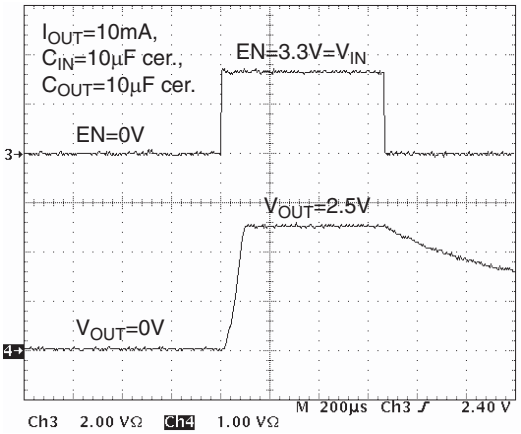

Figure 11. Enable/Disable Response

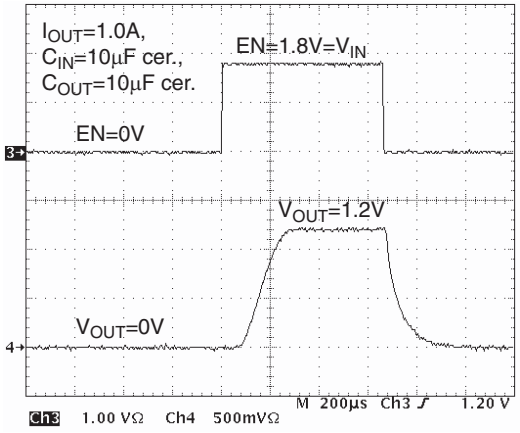

Figure 9. Enable/Disable Response

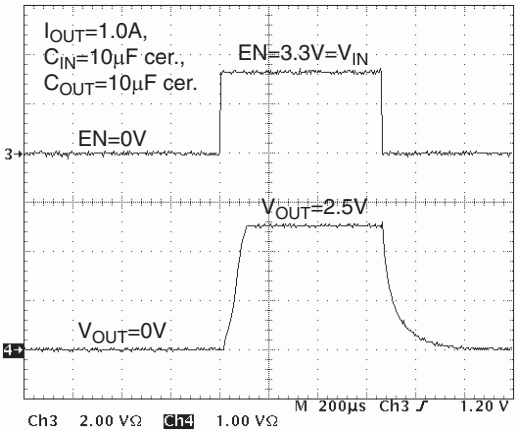

Figure 12. Enable/Disable Response

© 2004 California Micro Devices Corp. All rights reserved.

Performance Information (cont'd)

CM3004 Typical Thermal Characteristics

The overall junction to ambient thermal resistance (θ_{JA}) for device power dissipation (PD) consists primarily of two paths in series. The first path is the junction to the case (θ_{JC}) which is defined by the package style, and the second path is case to ambient (θ_{CA}) thermal resistance which is dependent on board layout. The final operating junction temperature for any set of conditions can be estimated by the following thermal equation:

$$T_{JUNC} = T_{AMB} + P_D (\theta_{JC}) + P_D (\theta_{CA})$$
$$= T_{AMB} + P_D (\theta_{JA})$$

The CM3004 uses a thermally enhanced package where all the GND pins (5 through 8) are integral to the leadframe. When this package is mounted on a double sided printed circuit board with two square inches of copper allocated for "heat spreading", the resulting θ_{JA} is about 50°C/W.

Based on a typical operating power dissipation of 1.0W with an ambient of 85°C, the resulting junction temperature will be:

$$T_{JUNC} = T_{AMB} + P_D (\theta_{JA})$$
$$= 85°C + 1.0W (50°C/W)$$
$$= 85°C + 50°C = 135°C$$

Thermal characteristics were measured using a double sided board with two square inches of copper area connected to the GND pins for "heat spreading". Measurement was performed under light load conditions (5mA).

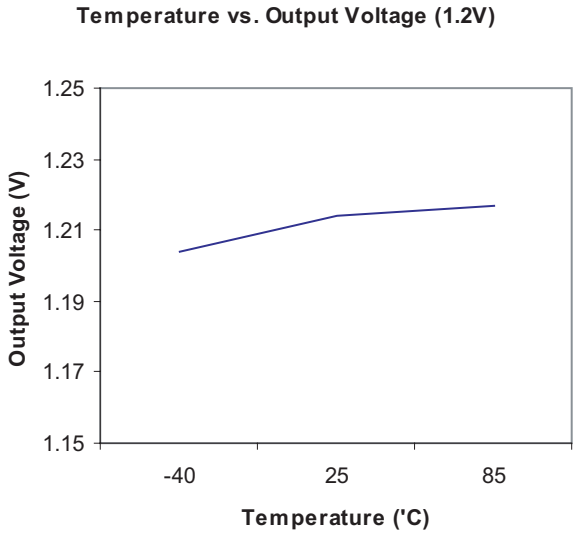

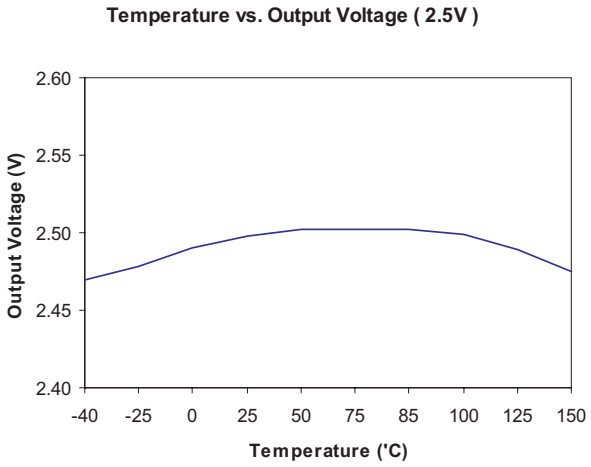

© 2005 California Micro Devices Corp. All rights reserved.

Application Information

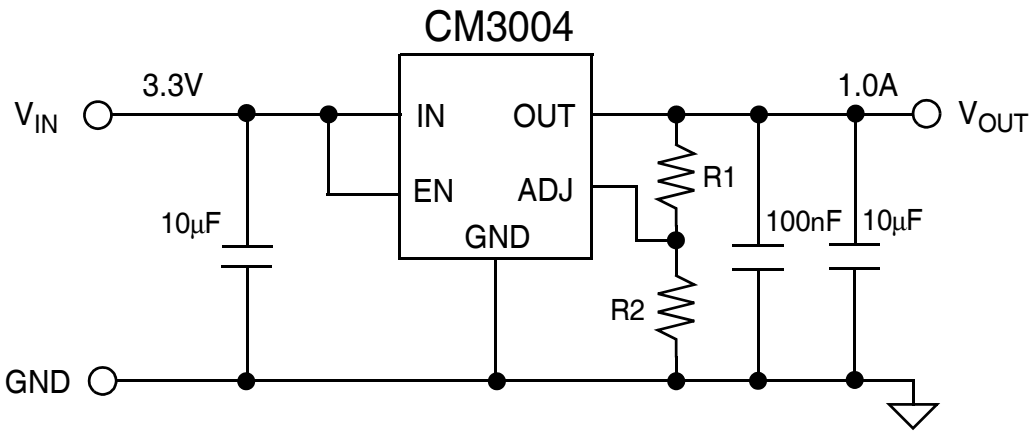

Figure 13. Application Circuit for Adjustable Output Operation.

Output Voltage = 1.20 (R1+R2) / R2 [VOLTS]

© 2004 California Micro Devices Corp. All rights reserved.

Mechanical Details

SOIC-8 Mechanical Specifications

Dimensions for the CM3004 supplied in an 8-lead SOIC package are presented below.

For complete information on the SOIC-8 package, see the California Micro Devices SOIC Package Information document.

PACKAGE DIMENSIONS				
Package	SOIC			
Lead	8			
Dimensions	**Millimeters**		**Inches**	
	Min	**Max**	**Min**	**Max**
A	1.35	1.75	0.053	0.069
A_1	0.10	0.25	0.004	0.010
B	0.33	0.51	0.013	0.020
C	0.19	0.25	0.007	0.010
D	4.80	5.00	0.189	0.197
E	3.80	4.19	0.150	0.165
e	1.27 BSC		0.050 BSC	
H	5.80	6.20	0.228	0.244
L	0.40	1.27	0.016	0.050
# per tube	100 pieces*			
# per tape and reel	2500 pieces			
Controlling dimension: inches				

* This is an approximate number which may vary.

Mechanical Package Diagrams

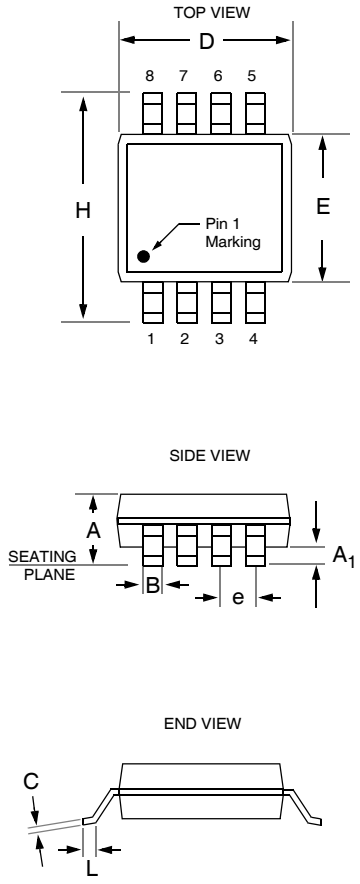

Package Dimensions for SOIC-8

© 2005 California Micro Devices Corp. All rights reserved.