Online data sheet



CLV622-3120

CLV62x

BAR CODE SCANNERS

SICK
Sensor Intelligence.



Ordering information

Type	Part no.
CLV622-3120	1041799

Other models and accessories → www.sick.com/CLV62x

Detailed technical data

Features

Version	Short Range
Connection type	Ethernet
Reading field	Side (105°)
Scanner design	Raster scanner
Focus	Fixed focus
Light source	Visible red light (655 nm)
MTBF	40,000 h
Laser class	2 (EN 60825-1 (A2:2001-03), IEC 60825-1 : 2007-03, Ed. 2.0)
Aperture angle	≤ 50°
Scanning frequency	400 Hz ... 1,200 Hz
Code resolution	0.15 mm ... 0.5 mm
Reading distance	55 mm ... 200 mm [1)]
Raster height, number of lines, at distance	15 mm, 8, 185 mm

[1)] For details see reading field diagram.

Performance

Bar code types	All current code types, Code 39, Code 128, Code 93, Codabar, GS1-128 / EAN 128, UPC / GTIN / EAN, Interleaved 2 of 5, Pharmacode, GS1 DataBar, Telepen, MSI/Plessey
Print ratio	2:1 ... 3:1
No. of codes per scan	1 ... 20 (Standard decoder) 1 ... 6 (SMART620)
No. of codes per reading interval	1 ... 50 (auto-discriminating)
No. of characters per reading interval	1,500 500 (for multiplexer function in CAN operation)
No. of multiple readings	1 ... 99

Interfaces

Ethernet TCP/IP	✓
Function	Host, AUX
Data transmission rate	10/100 MBit/s
PROFINET	✓
Function	PROFINET Single Port, PROFINET Dual Port (optional via external connection module CDF600-2)
Data transmission rate	10/100 MBit/s
EtherNet/IP™	✓
Data transmission rate	10/100 MBit/s
EtherCAT®	✓
Type of fieldbus integration	Optional over external fieldbus module CDF600
Serial	✓, RS-232, RS-422, RS-485
Function	Host, AUX
Data transmission rate	2,400 Baud ... 115.2 kBaud, AUX: 57.6 kBaud (RS-232)
CAN	✓
Function	SICK CAN sensor network (Master/Slave, Multiplexer/Server)
Data transmission rate	20 kbit/s ... 1 Mbit/s
CANopen	✓
Data transmission rate	20 kbit/s ... 1 Mbit/s
PROFIBUS DP	✓
Type of fieldbus integration	Optional over external fieldbus module CDF600-2
DeviceNet™	✓
Type of fieldbus integration	Optional via external connection module CDM + CMF
Switching inputs	3 (“Sensor 1”, 2 inputs via optional parameter storage CMC600 in CDB620/CDM420)
Switching outputs	2 (via CMC600 in CDB620/CDM420)
Reading pulse	Switching inputs, non-powered, serial interface, auto pulse, CAN
Optical indicators	6 LEDs (Ready, Result, laser, Data, CAN, LNK TX)
Acoustic indicators	Beeper/buzzer (can be switched off, can be allocated as a result indication function)
Configuration software	SOPAS ET

Mechanics/electronics

Electrical connection	2 x M12 cylindrical connectors (12-pin male connector, 4-pin female connector) on swivel connector
Operating voltage	10 V DC ... 30 V DC
Power consumption	4.5 W
Housing	Aluminum die cast
Housing color	Light blue (RAL 5012)
Front screen	Glass
Enclosure rating	IP65 (DIN 40 050)
Protection class	III (VDE 0106/IEC 1010-1)
Weight	230 g, without connecting cable

[1] Swivel connector is 15 mm longer.

Dimensions (L x W x H)	80 mm x 66 mm x 38 mm [1]

[1] Swivel connector is 15 mm longer.

Ambient data

Electromagnetic compatibility (EMC)	EN 61000-6-3 (2001-10) / EN 61000-6-2:2005
Vibration resistance	EN 60068-2-6 (1995)
Shock resistance	EN 60068-2-27 (1993)
Ambient operating temperature	0 °C ... +40 °C
Storage temperature	–20 °C ... +70 °C
Permissible relative humidity	90 %, Non-condensing
Ambient light immunity	2,000 lx, on bar code
Bar code print contrast (PCS)	≥ 60 %

Classifications

ECl@ss 5.0	27280102
ECl@ss 5.1.4	27280102
ECl@ss 6.0	27280102
ECl@ss 6.2	27280102
ECl@ss 7.0	27280102
ECl@ss 8.0	27280102
ECl@ss 8.1	27280102
ECl@ss 9.0	27280102
ETIM 5.0	EC002550
ETIM 6.0	EC002550
UNSPSC 16.0901	43211701

Dimensional drawing (Dimensions in mm (inch))

CLV62x Ethernet, side

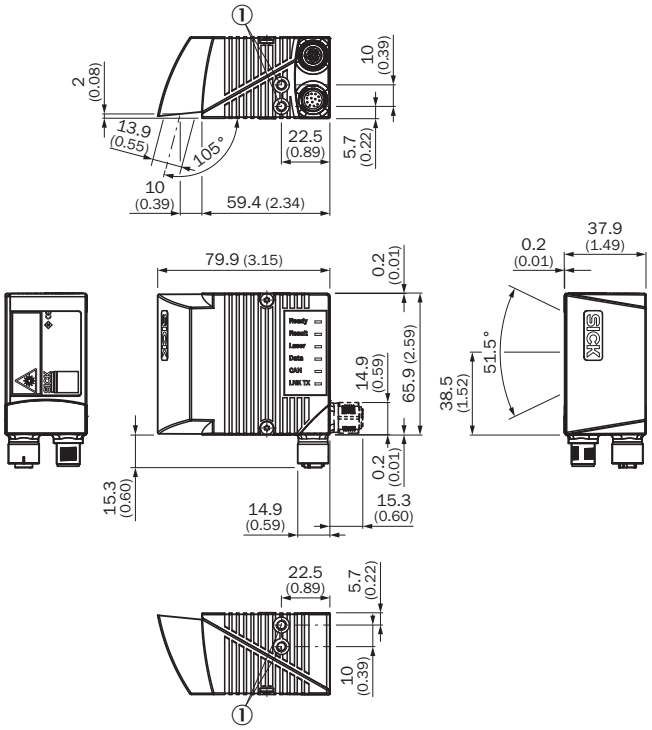

① M5

Reading field diagram

Reading field height in mm (inch)

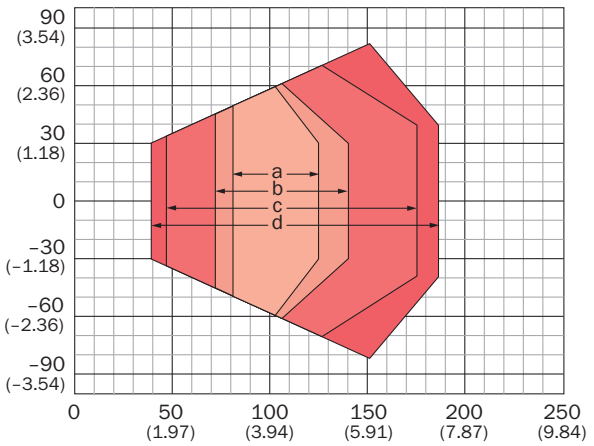

Reading distance in mm (inch)

Resolution

- a: 0.15 mm (5.9 mil)
- b: 0.2 mm (7.9 mil)
- c: 0.35 mm (13.8 mil)
- d: 0.50 mm (19.7 mil)

Recommended accessories

Other models and accessories ➜ www.sick.com/CLV62x

	Brief description	Type	Part no.
Mounting brackets and plates			
	Bracket with adapter board	Mounting bracket	2042902
Modules			
	Small connection module for one sensor, 4 cable glands, base for CMC600	CDB620-001	1042256
	Modular connection module for one sensor	CDM420-0001	1025362
Plug connectors and cables			
	Head A: female connector, M12, 12-pin, straight Head B: male connector, D-Sub-HD, 15-pin, straight Cable: Power, serial, CAN, digital I/Os, shielded, 2 m	Connection cable (male connector - female connector)	2041834
	Head A: male connector, M12, 4-pin, straight, D-coded Head B: male connector, RJ45, 8-pin, straight Cable: Ethernet, drag chain use, PUR, shielded, 2 m	SSL-2J04-G02ME	6034414

SICK AT A GLANCE

SICK is one of the leading manufacturers of intelligent sensors and sensor solutions for industrial applications. A unique range of products and services creates the perfect basis for controlling processes securely and efficiently, protecting individuals from accidents and preventing damage to the environment.

We have extensive experience in a wide range of industries and understand their processes and requirements. With intelligent sensors, we can deliver exactly what our customers need. In application centers in Europe, Asia and North America, system solutions are tested and optimized in accordance with customer specifications. All this makes us a reliable supplier and development partner.

Comprehensive services complete our offering: SICK LifeTime Services provide support throughout the machine life cycle and ensure safety and productivity.

For us, that is “Sensor Intelligence.”

WORLDWIDE PRESENCE:

Contacts and other locations –www.sick.com