Think of Frequency Think of TXC
come visit our site http://www.txccorp.com

SMD LVPECL VCXO - Differential Output 5.0 x 3.2 x 1.2 mm CJ Series

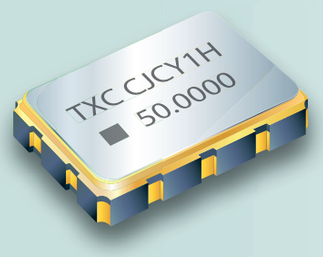

Features

- Voltage Controlled Crystal Oscillator (VCXO).
- Fundamental solution.
- LVPECL output, output frequencies 50 MHz to 200 MHz.
- Excellent low phase noise and jitter.
- Tri-State function available.
- Applications : SDH / SONET, Ethernet, Base Stations.
- RoHS Compliant / Pb Free.

Electrical Specifications

Item / Type	CJ
Output Type	LVPECL
Output Load	50 Ω
Oscillation Mode	Fundamental
Supply Voltage (VDD)	3.3 V
Frequency Range	50 ~ 200 MHz
Operating Temperature Range	- 10 ~ + 70 ℃ , - 40 ~ + 85 ℃ , or specify
Storage Temperature Range	- 55 ~ + 125 ℃
Voltage Vol (Max.) / Voh (Min.)	VDD - 1.62 V / VDD - 1.025 V
Rise (Tr) / Fall (Tf) Time (20 % ~ 80 %)	1 nS Max.
Supply Current	80 mA
Symmetry	45 ~ 55 %
Start-up Time	10 mS Max.
Absolute Pulling Range (APR) *	± 50 ppm Min. , or specify
Nominal Control Voltage	0.5 VDD
Control Voltage Range	0 ~ VDD
Linearity	10 % Max.
Phase Jitter (12 KHz ~ 20 MHz)	1 pS Max.

* APR=(Pull Range) - (Frequency tolerance at 25 ℃, variation over temperature, supply voltage, and aging.)

Dimensions

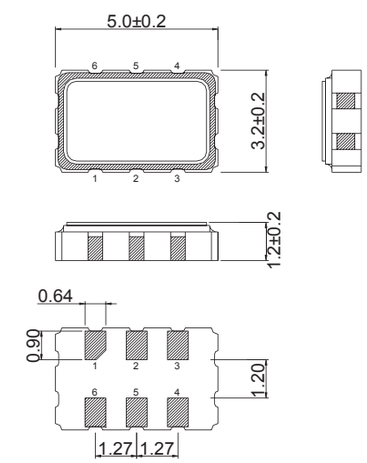

※ Pad dimension tolerance ±0.2 mm

Pin Function:

1. Enable Control or NC
2. Enable Control or NC
3. GND
4. OUT
5. OUTN
6. VDD

Land Pattern:

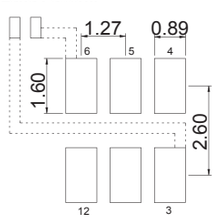

※ Power Supply Decoupling Capacitor is Required.
※ Pad dimension tolerance ±0.2 mm

Units: mm

Remark : Specification subject to change without prior notice. Please confirm with our sales. http://www.txccorp.com