Wheelock CH Series

Electronic Chimes & Chime Strobes



CH70 Series



CH90 Series

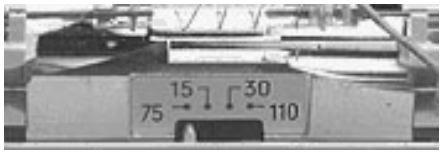

Multi-Candela Indicator
(bottom of Strobe Lens)

Description

Wheelock's Series CH Chimes and Chime Strobes minimize alarm system power supply requirements and wiring costs with a low current draw and a patented chime mounting plate for fast, easy installation. Each model has a built-in level adjustment feature and an aesthetic two (2) screw grille cover.

These unique solid-state chime appliances provide field selectable single-stroke or vibrating operation with Anechoic sound levels adjustable up to 83 dB and tone adjustable from 800 to 1200 Hz.

Strobe options for wall mount models include 15/75cd or Wheelock's patented MCW multi-candela strobe with field selectable candela settings of 15/30/75/110cd.

Ceiling mount models are available in Wheelock's patented MCC multi-candela ceiling strobe with field selectable intensities of 15/30/75/95cd.

The strobe portion of all Series CH Chime Strobes may be synchronized when used in conjunction with the Wheelock SM, DSM Sync Modules or a power supply with patented Wheelock Sync Protocol. Wheelock's synchronized strobes offer an easy way to comply with ADA recommendations concerning photosensitive epilepsy as well as meeting the requirements of NFPA 72 and UFC.

The Series CH Chime Strobes are UL Listed for indoor, wall or ceiling mount applications under Standard 1971 for Signaling Devices for the Hearing-Impaired and under Standard 464 for Private Mode Audible Signal Appliances. They are available in two attractive package styles for flush mounting to standard electrical boxes or convenient surface mounting. All models include IN/OUT wiring terminations that accept two 12 to 18 AWG wires at each terminal. Inputs are polarized for compatibility with industry standard reverse polarity supervision.

Features

- ADA/NFPA/UFC/ANSI compliant
- Complies with OSHA 29 Part 1910.165
- Wall mount models are available with Field

  Selectable Candela Settings of 15/30/75/110cd or 15/75cd (single candela model)
- Ceiling mount models are available with field selectable candela settings of 15/30/75/95cd
- Low current draw with temperature compensation to reduce power consumption and wiring costs
- Strobes produce once per second over the regulated voltage range
- 24 VDC with wide UL "Regulated Voltage" using filtered DC or unfiltered VRMS input voltage
- Synchronize with Wheelock SM, DSM or any power supply with built-in Wheelock sync protocol
- Adjustable Volume and Tone Control
- Single Stroke or Vibrating Operation
- Fast Installation with IN/OUT screw terminals using 12 to 18 AWG wires

Listings

Listings and approvals below apply to the basic CH Series Electronic Chimes and Chime Strobes. In some cases, certain modules may not be listed by certain approval agencies, or listing may be in process. Consult factory for latest listing status.

- UL Listed: files E5946: E5946/S5391
- MEA Listed. file 151-92-E Vol. XXI
- CSFM approved: file 7135-0785:151

Gamewell™
A 150-Year Tradition

A Honeywell Company

General Notes

- Strobes are designed to flash once per second minimum over their "Regulated Voltage Range". Note that NFPA-72 specifies a flash rate of 1 to 2 flashes per second and ADA Guidelines specify a flash rate of 1 to 3 flashes per second.
- All candela ratings represent minimum effective Strobe intensity based on UL Standard 1971.
- Series E Speaker Strobes and Series E Speakers are listed under UL Standard 1971 for indoor use with a temperature range of 32°F to 120°F (0°C to 49°C) and maximum humidity of 85%.
- **"Regulated Voltage Range" is the newest terminology used by UL to identify the voltage range. Prior to this change UL used the terminology "Listed Voltage Range".**

Engineering's Specifications

The chime appliances shall be Wheelock Series CH Chimes and the chime strobe appliances shall be Wheelock Series CH Chime Strobes or approved equals. The chime shall be UL Listed under Standard 464 for Audible Signal Appliances and chimes equipped with strobes shall be listed under UL Standard 1971 for Emergency Devices for the Hearing-Impaired. In addition, the strobes shall be certified to meet the requirements of FCC Part 15, Class B and shall incorporate low temperature compensation to ensure the lowest possible current consumption.

All chimes shall use solid state components and shall provide field selectable single stroke or vibrating operation with volume control and tone control. All models shall have a peak Anechoic sound output of 83 dB at 10 feet and an adjustable frequency range of 800 to 1200 Hz. All inputs shall employ terminals that accept 12 to 18 AWG wire sizes.

The strobe portion of the appliance shall produce a flash rate of one (1) flash per second over the Regulated Voltage Range and shall incorporate a Xenon flashtube enclosed in a rugged Lexan® lens. The strobe shall be of low current design. Where Multi-Candela Chime Strobes are specified, the strobe intensity shall have a minimum of four (4) field selectable settings and shall be rated per UL Standard 1971 at: 15/30/75/110cd or 135/185cd for wall mount and 15/30/75/95cd or 115/177cd for ceiling mount. The selector switch for selecting the candela shall be tamper resistant and not accessible from the front of the appliance. The 1575 candela strobe shall be specified when 15 candela UL Standard 1971 listing with 75 candela on-axis is required (e.g. ADA compliance).

When synchronization is required, the strobe portion of the appliance shall be compatible with Wheelock's SM, DSM sync modules or any power supply with built-in Patented Wheelock Sync Protocol. The strobes shall not drift out of synchronization at any time during operation. If the sync module or Power Supply fails to operate, (i.e., contacts remain closed), the strobe shall revert to a non-synchronized flash rate.

The chime and the chime strobe appliances shall be designed for indoor surface or flush mounting. The chime and chime strobe shall incorporate a chime mounting plate with a grille cover which is secured with two screws for a level, aesthetic finish and shall mount to standard electrical hardware requiring no additional trimplate or adapter.

All chime and chime strobe appliances shall be backward compatible.

Wheelock products must be used within their published specifications and must be PROPERLY specified, applied, installed, operated, maintained and operationally tested in accordance with their installation instructions at the time of installation and at least twice a year or more often and in accordance with local, state and federal codes, regulations and laws. Specification, application, installation, operation, maintenance and testing must be performed by qualified personnel for proper operation in accordance with all of the latest National Fire Protection Association (NFPA), Underwriters' Laboratories (UL), National Electrical Code (NEC), Occupational Safety and Health Administration (OSHA), local, state, county, province, district, federal and other applicable building and fire standards, guidelines, regulations, laws and codes including, but not limited to, all appendices and amendments and the requirements of the local authority having jurisdiction (AHJ).

⚠WARNING! CONTACT WHEELOCK FOR THE CURRENT "INSTALLATION INSTRUCTIONS" AND "GENERAL INFORMATION" SHEET (P82380) ON THESE PRODUCTS. THESE DOCUMENTS UNDERGO PERIODIC CHANGES. IT IS IMPORTANT THAT YOU HAVE CURRENT INFORMATION ON THESE PRODUCTS. THESE MATERIALS CONTAIN IMPORTANT INFORMATION THAT SHOULD BE READ PRIOR TO SPECIFYING OR INSTALLING THESE PRODUCTS, INCLUDING:

- TOTAL CURRENT REQUIRED BY ALL APPLIANCES CONNECTED TO SYSTEM SECONDARY POWER SOURCES.
- FUSE RATINGS ON NOTIFICATION APPLIANCE CIRCUITS TO HANDLE PEAK CURRENTS FROM ALL APPLIANCES ON THOSE CIRCUITS.
- COMPOSITE FLASH RATE FROM MULTIPLE STROBES WITHIN A PERSON'S FIELD OF VIEW.
- ADDING, REPLACING OR CHANGING APPLIANCES OR CHANGING CANDELA SETTINGS WILL AFFECT CURRENT DRAW. RECALCULATE CURRENT DRAW TO INSURE THAT THE TOTAL AVERAGE CURRENT AND TOTAL PEAK REQUIRED BY ALL APPLIANCES DO NOT EXCEED THE RATED CAPACITY OF THE POWER SOURCES OR FUSES.
- THE VOLTAGE APPLIED TO THESE PRODUCTS MUST BE WITHIN THEIR "REGULATED VOLTAGE RANGE".
- INSTALLATION OF 110 CANDELA STROBE PRODUCTS IN SLEEPING AREAS.
- INSTALLATION IN OFFICE AREAS AND OTHER SPECIFICATION AND INSTALLATION ISSUES.
- USE STROBES ONLY ON CIRCUITS WITH CONTINUOUSLY APPLIED OPERATING VOLTAGE. DO NOT USE STROBES ON CODED OR INTERRUPTED CIRCUITS IN WHICH THE APPLIED VOLTAGE IS CYCLED ON AND OFF AS THE STROBES MAY NOT FLASH.
- FAILURE TO COMPLY WITH THE INSTALLATION INSTRUCTIONS OR GENERAL INFORMATION SHEETS COULD RESULT IN IMPROPER INSTALLATION, APPLICATION, AND/OR OPERATION OF THESE PRODUCTS IN AN EMERGENCY SITUATION, WHICH COULD RESULT IN PROPERTY DAMAGE AND SERIOUS INJURY OR DEATH TO YOU AND/OR OTHERS.
- CONDUCTOR SIZE (AWG), LENGTH AND AMPACITY SHOULD BE TAKEN INTO CONSIDERATION PRIOR TO DESIGN AND INSTALLATION OF THESE PRODUCTS, PARTICULARLY IN RETROFIT INSTALLATIONS.

Wiring Diagram

SERIES CH CHIME & STROBE OPERATE INDEPENDENTLY (NON-SYNC OR SYNC)

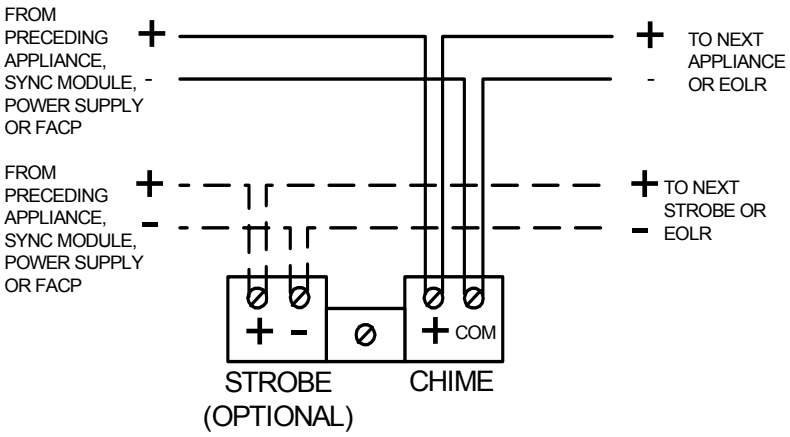

SERIES CH CHIME STROBES SYNCHRONIZED W/ MULTIPLE DSM MODULES

Note: Figure shows interconnection to strobe through sync module. Chime portion requires 2 separate conductors to FACP.

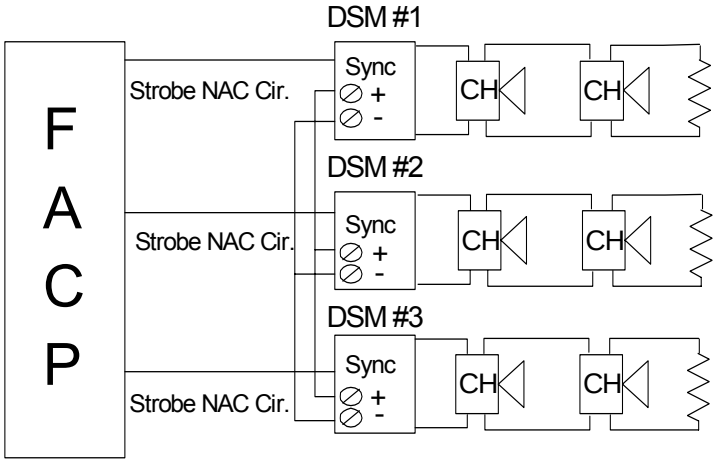

DSM Interconnecting wiring shown. Maximum of twenty (20)

SERIES CH CHIME STROBE APPLIANCES SYNCHRONIZED WITH DSM MODULE SINGLE "CLASS A"

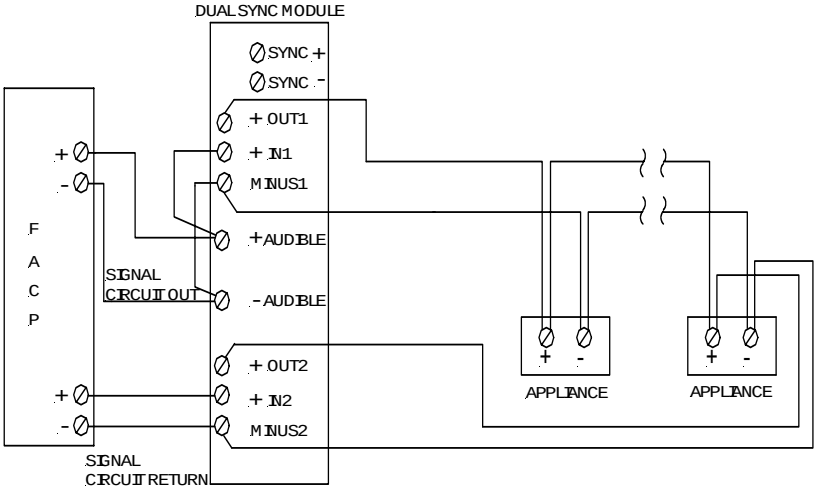

⚠WARNING! **NOTE: All CAUTIONS and WARNINGS are identified by the symbol ⚠. All warnings are printed in bold capital letters. PLEASE READ THESE SPECIFICATIONS AND ASSOCIATED INSTALLATION INSTRUCTIONS CAREFULLY BEFORE USING, SPECIFYING OR APPLYING THIS PRODUCT. FAILURE TO COMPLY WITH ANY OF THESE INSTRUCTIONS, CAUTIONS OR WARNINGS COULD RESULT IN IMPROPER APPLICATION, INSTALLATION AND/OR OPERATION OF THESE PRODUCTS IN AN EMERGENCY SITUATION, WHICH COULD RESULT IN PROPERTY DAMAGE, AND SERIOUS INJURY OR DEATH TO YOU AND/OR OTHERS.**

Ordering Information

MODEL	STROBE CANDELA	NON-SYNC	SYNC W/SM, DSM	MODEL COLOR	WALL/ CEILING MOUNT	MOUNTING OPTIONS**	AGENCY APPROVALS			
							UL	MEA	CSFM	BFP
CH70-24MCW-FR	15/30/75/110	X	X	Red	Wall	L,O,P,Q,U,Y	X	X	X	X
CH70-24MCW-FW	15/30/75/110	X	X	White	Wall	L,O,P,Q,U,Y	X	X	X	X
CH70-241575W-FR	15 (75 on Axis)	X	X	Red	Wall	L,O,P,Q,U,Y	X	X	X	X
CH90-24MCC-FW	15/30/75/95	X	X	White	Ceiling	L,O,P,Q,U,V,Y	X	*	X	*
CH70-24-R	-	X	X	Red	Wall/Ceiling	L,O,P,Q,U,V,Y	X	X	X	X
CH90-24-W	-	X	X	White	Wall/Ceiling	L,O,P,Q,U,V,Y	X	X	X	X

* Average RMS Current is per UL average RMS method and Average Mean Current is per UL average mean method. For rate In Rush and Peak current across the UL listed voltage range for both filtered DC and unfiltered VRMS (FWR), see installation instructions.
** Refer to mounting options data sheet.

TABLE 1: AVERAGE RMS CURRENT*

CH70/C90 CHIMES	CH70 STROBE CURRENT - WALL MOUNT							CH90 STROBE CURRENT - CEILING MOUNT					
	241575W	24MCW				24MCWH		24MCC				24MCCH	
	15/75cd	15cd	30cd	75cd	110cd	135cd	185cd	15cd	30cd	75cd	95cd	115cd	177cd
16 vdc	0.101	0.062	0.102	0.192	0.265	0.300	0.420	0.068	0.112	0.211	0.292	0.300	0.420
24 vdc	0.064	0.041	0.065	0.116	0.155	0.195	0.270	0.045	0.072	0.128	0.171	0.195	0.270
33 vdc	0.047	0.032	0.047	0.081	0.107	0.145	0.190	0.035	0.052	0.089	0.118	0.145	0.190

TABLE 2: CHIME dBA RATINGS

CH70/CH90 SOUND LEVEL	PEAK dBA @ 10 ft. ANECHOIC	dBA @ 10 ft. REVERBERANT	
		Min	Max
	83	52	58

Application

1. The chimes are factory set in single stroke (SS) mode. They can be changed to vibrating (VIB) mode with jumper on PC Board. SINGLE STROKE OPERATION: The minimum input pulse duration must be at least 160 ms "on" time and 160 ms "off" time. The chime will only operate once each time it is pulsed. This mode is recommended for coded systems. VIBRATING OPERATION: Continuous input voltage applied to the chime will activate the chime at one-second intervals.
2. The volume and tone controls have been adjusted at the factory to insure maximum dBA output. However, once the mode is selected, the installer may want to fine-tune the signal to better suit the application.
3. Anechoic dBA is measured in an anechoic chamber with peak meter response. Reverberant dBA is rated per UL Standard 464.
4. Chime inrush current is 0.100 amps maximum with filtered DC input (0.140 amps with VRMS input voltage) with a time duration of 100 milliseconds.

Gamewell™
A 150-Year Tradition
A Honeywell Company

The Gamewell Company
12 Clintonville Road
Northford, CT 06472-1610
Phone: 203-484-7161
Fax: 203-484-7118
www.gamewell.com

A Honeywell Company

© 2004 Gamewell

SYNC MODELS/POWER SUPPLY			
MODEL NUMBER	INPUT VOLTAGE (VDC)	AVERAGE MEAN CURRENT @ 24 VDC	MOUNTING OPTIONS
SM-12/24-R	24	.028	W
DSM-12/24-R	24	.035	W

SM Sync Module is rated for 3.0 amperes @ 24 VDC.

DSM Sync Module is rated for 3.0 amperes per circuit. The maximum number of interconnected DSM modules is twenty (20).

Specifications and wiring information are provided for information only and are believed to be accurate. Gamewell assumes no responsibility for their use. Data and design are subject to change without notice. Installation and wiring instructions shipped with the product shall always be used for actual installation. For more information, contact Gamewell.