CGA8M3X7S2A335M200KB

TDK Item Description : CGA8M3X7S2A335MT****

Lead Free | Halogen Free | REACH | RoHS COMPLIANT

Equivalent C4532X7S2A335M for Automotive

Characterization Sheet (Multilayer Ceramic Chip Capacitors)

Application & Main Feature

Automotive Grade (Mid Voltage (100 to 630V))

Series

CGA8(4532) [EIA CC1812]

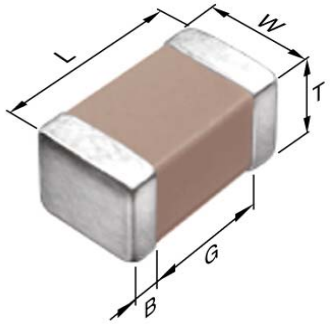

Dimensions

L	4.50mm +/-0.4mm
W	3.20mm +/-0.4mm
T	2.00mm +/-0.2mm
B	0.20mm Min.
G	

Temperature Characteristic

X7S (-55 to 125 degC +/-22%)

Rated Voltage

2A (100Vdc)

Capacitance

3.3uF

Capacitance Tolerance

M (+/-20%)

Dissipation Factor

5% Max.

Insulation Resistance

151Mohm Min.

AEC-Q200

Yes

DC Bias Characteristic

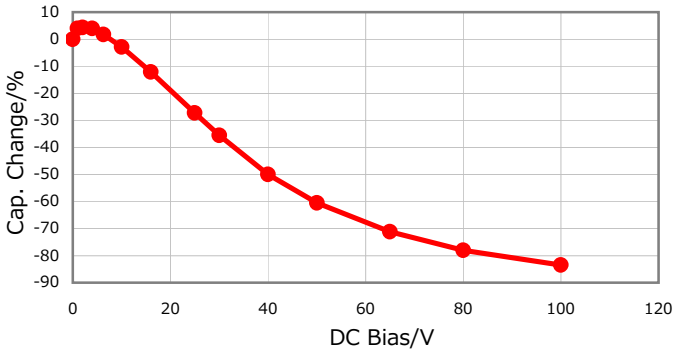

|Z|, ESR vs. Freq. Characteristics

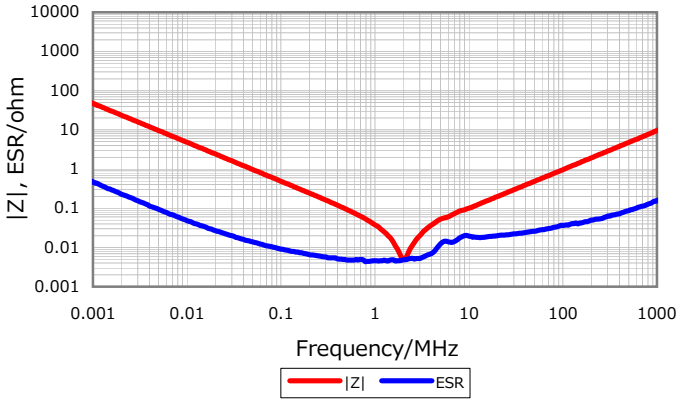

Temperature Characteristics

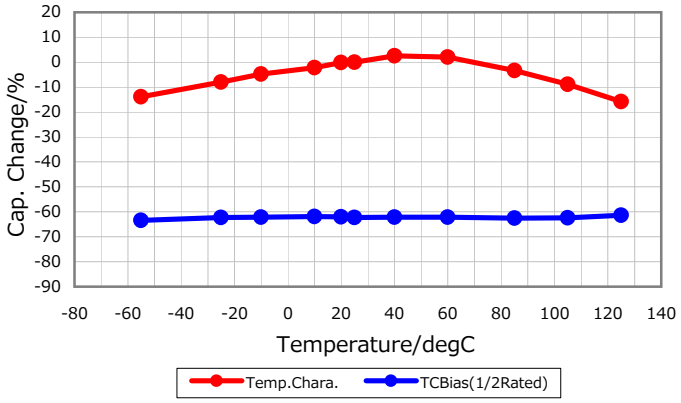

Cap. vs. Freq. Characteristic

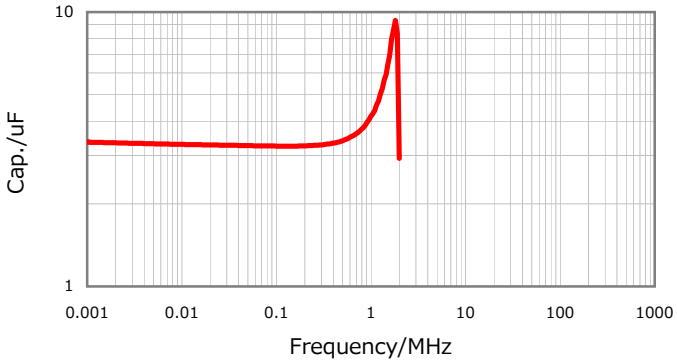

Ripple Temperature Rise Characteristics

