Littelfuse
Expertise Applied | Answers Delivered

CG7 Series



Agency Approvals

AGENCY	AGENCY FILE NUMBER
	E128662
	E320116

Two Electrode GDT Graphical Symbol



Additional Information

Datasheet | Resources | Samples

Description

The Littelfuse CG7 series GDT is a miniature surface mount device with a 1kA 8/20µS surge rating. Its low insertion loss and thus low off-state capacitance makes it compatible with high bandwidth applications up to the GHz RF range. This GDT's crowbarring characteristic protects sensitive ICs from surges as defined in ITU K.20/21/45 Basic and Enhanced Recommendations, GR-1089-CORE first level lightning Port Type 1 and 3, and IEC 61000-4-5 2nd edition. It is hermetically sealed using non-radioactive materials Classes 1-3 and some Class 4 & 5 cases and is thus environmentally safe. Its 2.8mm diameter size makes it the world's smallest two-electrode single chamber GDT available.

Features

- RoHS compliant and Lead-free
- Excellent Surge Withstanding Capability
- Excellent response to fast rising transients.
- Ultra Low Insertion Loss and low off-state capacitance for GHz bandwidth compatibility
- Ultra small devices offered in SMD package
- 1kA 8/20µS surge capability pulse as defined by IEC 61000-4-5 2nd edition
- Ultra Low capacitance (<0.3pF)
- Voltage Range 75V to 470V
- UL recognized

Applications

- Set top box
- Cable Modem
- Embedded Multimedia Terminal Adapter (EMTA)
- RF Connector
- Multimedia over Coax Alliance (MoCA)
- Base Station RF antenna transmitter
- G.Fast 106MHz and 212 MHz bandplans compatible
- CATV/Broadband equipment
- Data lines and Ethernet (up to 10GbE)
- Telecom line protection
- Broadband equipment
- xDSL equipment, including ADSL2, ADSL, VDSL, VDSL2 30a bandplan compatible
- IAD (Integrated Access Device)
- Aerospace and Automotive

© 2017 Littelfuse, Inc.
Specifications are subject to change without notice.
Revised: 12/12/17

Gas Discharge Tubes
CG7 Series

Electrical Characteristics

Part Number	Device Specifications (at 25°C)								Life Ratings			
	DC Breakdown in Volts (@100V/s)			Impulse Break-down in Volts (@100V/µs)	Impulse Break-down In Volts (@1kV/µs)	Insulation Resistance	Capaci-tance (@1MHz)	Max Impulse Discharge Current (8/20µs)	Max Impulse Discharge Current (10/700µs)	AC Dischage Current (9 cycle @50Hz)	DC Holdover Voltage (<150ms)	Impulse Life (8/20µs) (100A)
	MIN	TYP	MAX	MAX		MIN	MAX			MIN		MIN
CG775	60	75	90	600	700	1GΩ@50V	0.3pf	10 Shots (@1kA) [1] 1 Shot at 2kA	10 Shots (@ 100A/4kV) [2]	1A	52V	300 Shots
CG790	72	90	108	600	700						52V	
CG7120	96	120	144	600	700	1GΩ@100V					80V	
CG7150	120	150	180	600	700						80V	
CG7200	160	200	240	600	700						135V	
CG7230	186	230	276	600	700						135V	
CG7250	200	250	300	600	700						135V	
CG7350	280	350	420	750	900						135V	
CG7400	360	400	480	850	1000						135V	
CG7470	376	470	564	900	1100	1GΩ@250V					135V	

Notes:
UL Pending for CG775 and CG7470.
1. 5 x (+) and 5 x (-) applications of 1kA 8/20µs sec.
2. 5 x (+) and 5 x (-) applications of 100A 10/700µs sec.

Product Characteristics

Materials	Device Tin Plated 17.5 ± 12.5 Microns Construction: Ceramic Insulator
Storage and Operational Temperature	-40 to +90°C

Voltage Vs. Time Characteristic

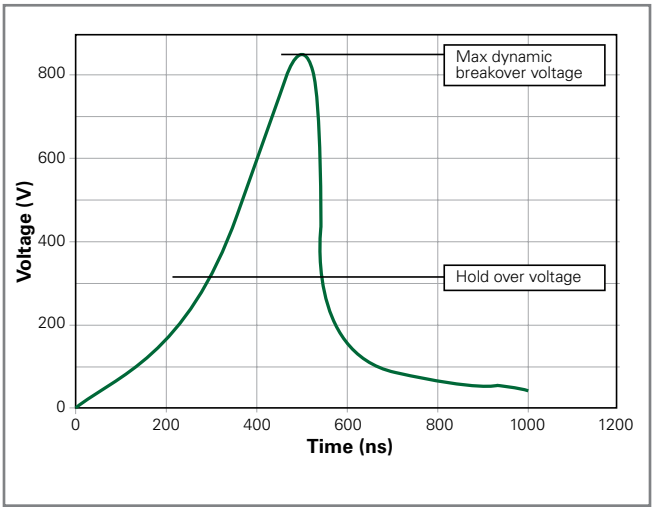

Note: Tested per 1kV/µs waveform

Typical Insertion Loss

@1.0GHz = 0.02dB
@1.4GHz = 0.03dB
@1.8GHz = 0.05dB
@2.0GHz = 0.06dB
@2.4GHz = 0.07dB
@2.8GHz = 0.08dB
@3.1GHz = 0.09dB
@3.5GHz = 0.10dB
@4.0GHz = 0.12dB

Note: Insertion data for customer reference only, application testing needed for verification.

V-I Characteristic Curve

Characteristics of Gas Plasma -response to transient condition

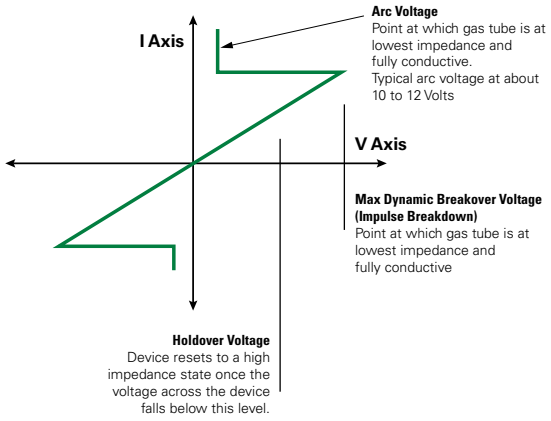

© 2017 Littelfuse, Inc.
Specifications are subject to change without notice.
Revised: 12/12/17

Soldering Parameters - Reflow Soldering (Surface Mount Devices)

Reflow Condition		Pb – Free assembly
Pre Heat	-Temperature Min ($T_{s(min)}$)	150°C
	-Temperature Max ($T_{s(max)}$)	200°C
	-Time (Min to Max) (t_s)	60 – 180 secs
Average ramp up rate (Liquidus Temp (T_L) to peak		3°C/second max
$T_{S(max)}$ to T_L - Ramp-up Rate		5°C/second max
Reflow	-Temperature (T_L) (Liquidus)	217°C
	-Temperature (t_L)	60 – 150 seconds
Peak Temperature (T_P)		$260^{+0/-5}$ °C
Time within 5°C of actual peak Temperature (t_p)		10 – 30 seconds
Ramp-down Rate		6°C/second max
Time 25°C to peak Temperature (T_P)		8 minutes Max.
Do not exceed		260°C

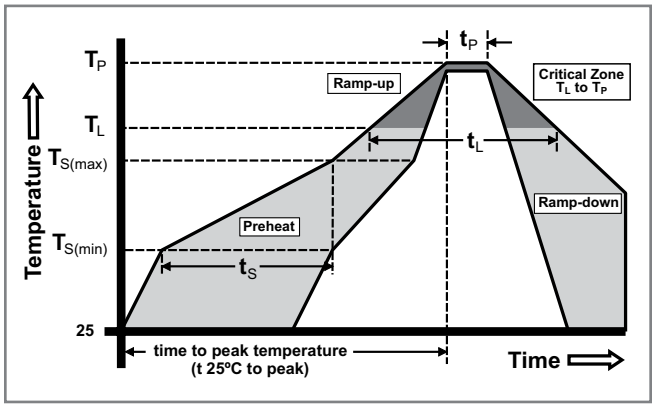

Device Dimensions

Dimensions in millimeters

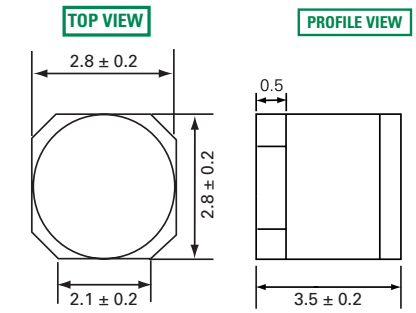

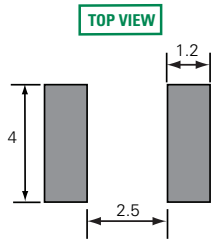

Recommended Soldering Pad Layout

Product Marking

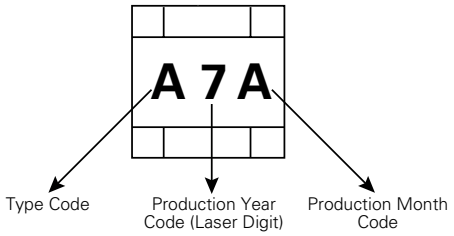

Type Code	
A	CG775
B	CG790
T	CG7120
C	CG7150
O	CG7200
D	CG7230
R	CG7250
G	CG7350
I	CG7400
P	CG7470

Month Code	
A	January
B	February
C	March
D	April
E	May
F	June
G	July
H	August
I	September
J	October
K	November
L	December

© 2017 Littelfuse, Inc.
Specifications are subject to change without notice.
Revised: 12/12/17

Taping and Reel Specifications

Unit = mm

Item	Spec	Item	Spec
P	8.0 ± 0.1	E	1.75 ± 0.1
P0	4.0 ± 0.1	D	1.50 + 0.1/-0.0
P2	2.0 ± 0.1	B0	3.9 ± 0.1
W	12.0 ± 0.3	K0	3.2 ± 0.1
F	5.5 ± 0.1	T	0.4 ± 0.1
A0	3.2 ± 0.1	10P0	4.0 ± 0.2

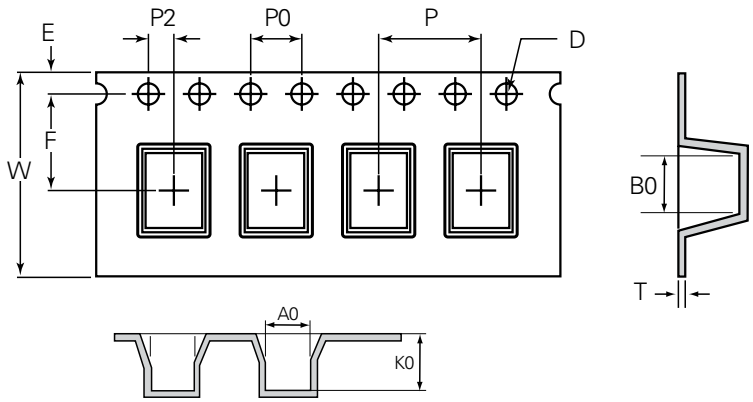

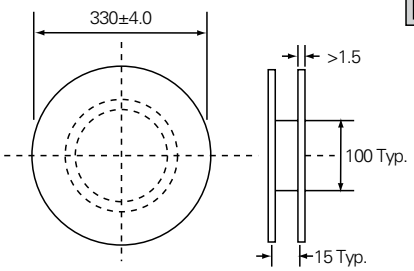

Packaging Quantity:
2500 pcs per reel (13")
1 reels per inner box
10 inners box per carton
25,000 pcs per full carton

Part Numbering System and Ordering Information

CG7 XXX MS

Series
CG7

Breakdown Voltage
70 = 70V
90 = 90V
120 = 120V
150 = 150V
200 = 200V
230 = 230V
350 = 350V
400 = 400V
470 = 470V

Surface Mount

Disclaimer Notice - Information furnished is believed to be accurate and reliable. However, users should independently evaluate the suitability of and test each product selected for their own applications. Littelfuse products are not designed for, and may not be used in, all applications. Read complete Disclaimer Notice at: www.littelfuse.com/disclaimer-electronics.

© 2017 Littelfuse, Inc.
Specifications are subject to change without notice.
Revised: 12/12/17