Top View

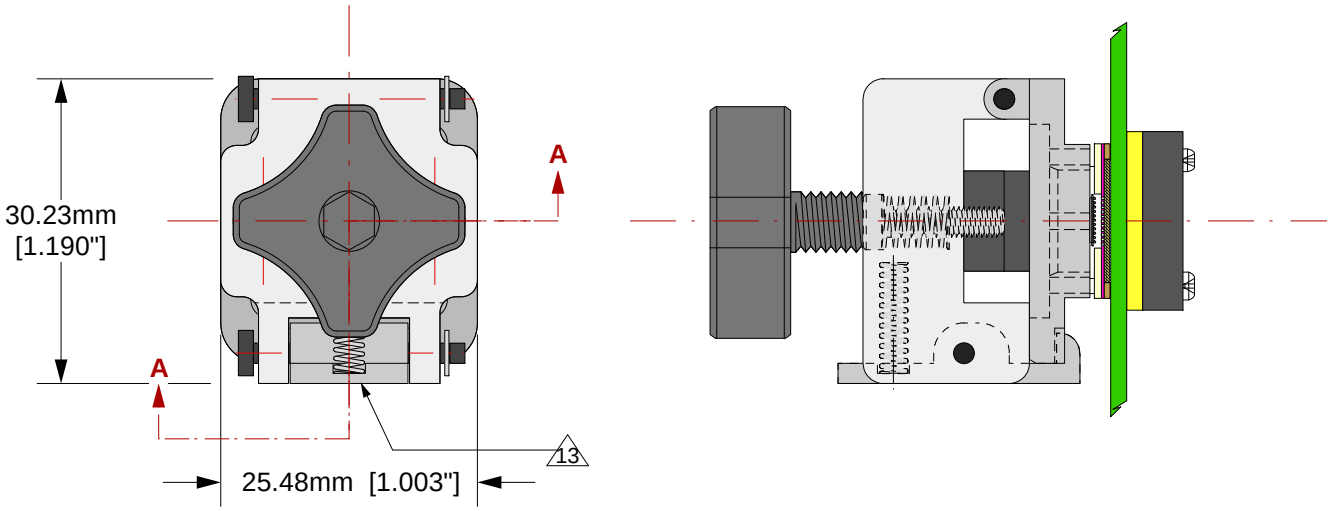

Side View
(Section AA)

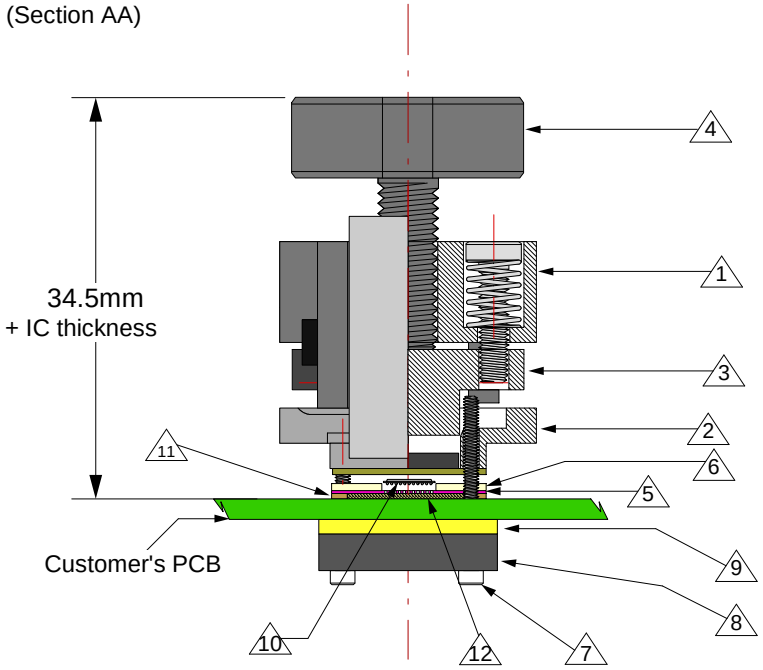

Features

Directly mounts to target PCB (needs tooling holes) with hardware

Minimum real estate required

Compression plate distributes forces evenly

Clamshell lid

Materials:

1	Clam Shell Lid: Black anodized Aluminum. Height = 16.5 mm.
2	Socket Base: Black anodized Aluminum. Height = 6 mm.
3	Compression Plate: Black anodized Aluminum. Thickness = 8.5 mm.
4	Compression Screw: Clear anodized Aluminum. Height = 25 mm, Fluted Knob
5	Ball Guide: Kapton polyimide.
6	IC Guide: Torlon
7	Socket Base Screw: Socket Head Cap Screw, alloy steel with black oxide finish, 0-80 Thread, 5/8" long.
8	Backing Plate: Black anodized Aluminum. Thickness= 4mm
9	Insulation Plate: FR4/G10
10	Customer's BGA IC
11	Elastomer Guide: Non-clad FR4. Thickness = 0.475mm.
12	Elastomer: 20 micron dia gold plated brass filaments arranged symmetrically in a silicone rubber (63.5 degree angle). Thickness = 0.5mm.
13	Latch: Black anodised Aluminum.

CG-BGA-5004 Drawing	Status: Released	Scale: 1.33:1	Rev: B
© 2010 IRONWOOD ELECTRONICS, INC. Tele: (952) 229-8200 www.ironwoodelectronics.com	Drawing: S. Natarajan	Date: 04/02/2010	
	File: CG-BGA-5004 Dwg.mcd	Modified: 09/17/14	

All Tolerances: ±0.125mm (unless stated otherwise). Materials and specifications are subject to change without notice.

Recommended PCB Layout
Top View

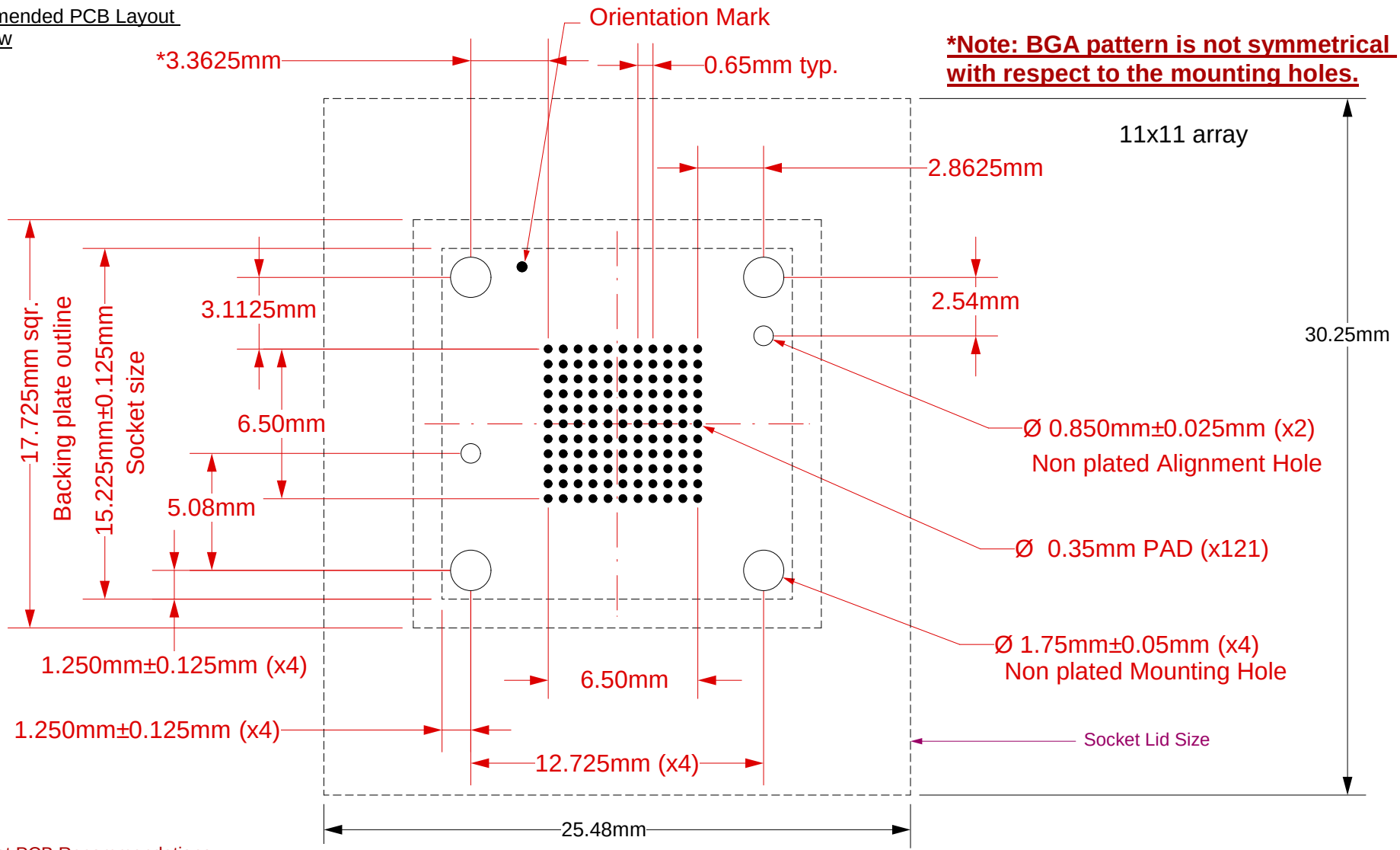

Target PCB Recommendations
Total thickness: 1.6mm min.
Plating: Gold or Solder finish
PCB Pad height: Same or higher than solder mask

All dimensions are in mm unless stated otherwise

Recommended PCB Layout Tolerances: ±0.025mm [±0.001"] unless stated otherwise.

CG-BGA-5004 Drawing	Status: Released	Scale: 4:1	Rev: B
© 2010 IRONWOOD ELECTRONICS, INC. Tele: (952) 229-8200 www.ironwoodelectronics.com	Drawing: S.Natarajan	Date: 04/02/2010	
	File: CG-BGA-5004 Dwg.mcd	Modified: 09/17/14	

Recommended PCB Layout Tolerances: ±0.025mm [±0.001"] unless stated otherwise.

Compatible BGA Spec.

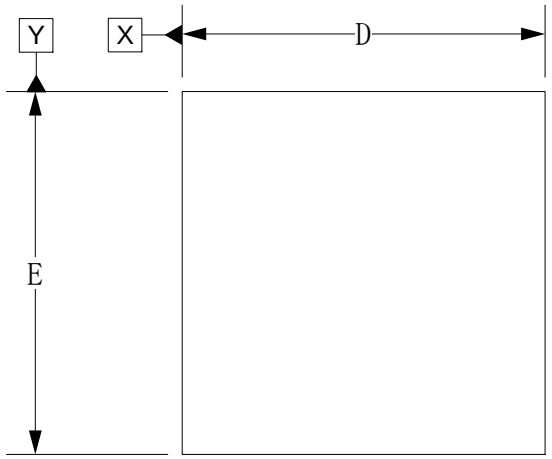

Top View

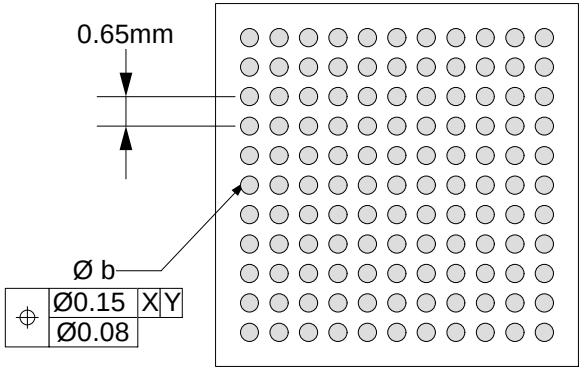

Bottom View

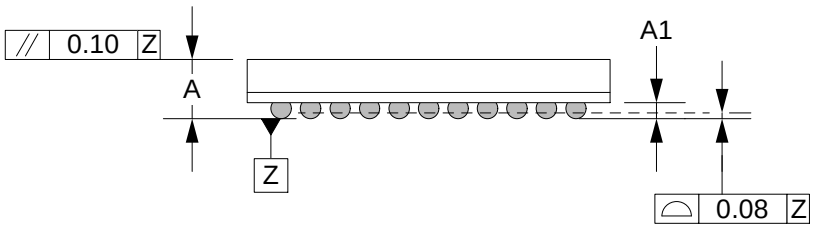

Side View

1. Dimensions are in millimeters.
2. Interpret dimensions and tolerances per ASME Y14.5M-1994.
3. Dimension b is measured at the maximum solder ball diameter, parallel to datum plane Z.
4. Datum Z (seating plane) is defined by the spherical crowns of the solder balls.
5. Parallelism measurement shall exclude any effect of mark on top surface of package.

DIM	MIN	MAX
A		1.2
A1	0.27	0.37
b	0.35	0.45
D	8.0 BSC	
E	8.0 BSC	
e	0.65 BSC	

Array: 11x11

CG-BGA-5004 Drawing	Status: Released	Scale: 8:1	Rev: B
© 2010 IRONWOOD ELECTRONICS, INC. Tele: (952) 229-8200 www.ironwoodelectronics.com	Drawing: S.Natarajan	Date: 04/02/2010	
	File: CG-BGA-5004 Dwg.mcd	Modified: 09/17/14	

Top View

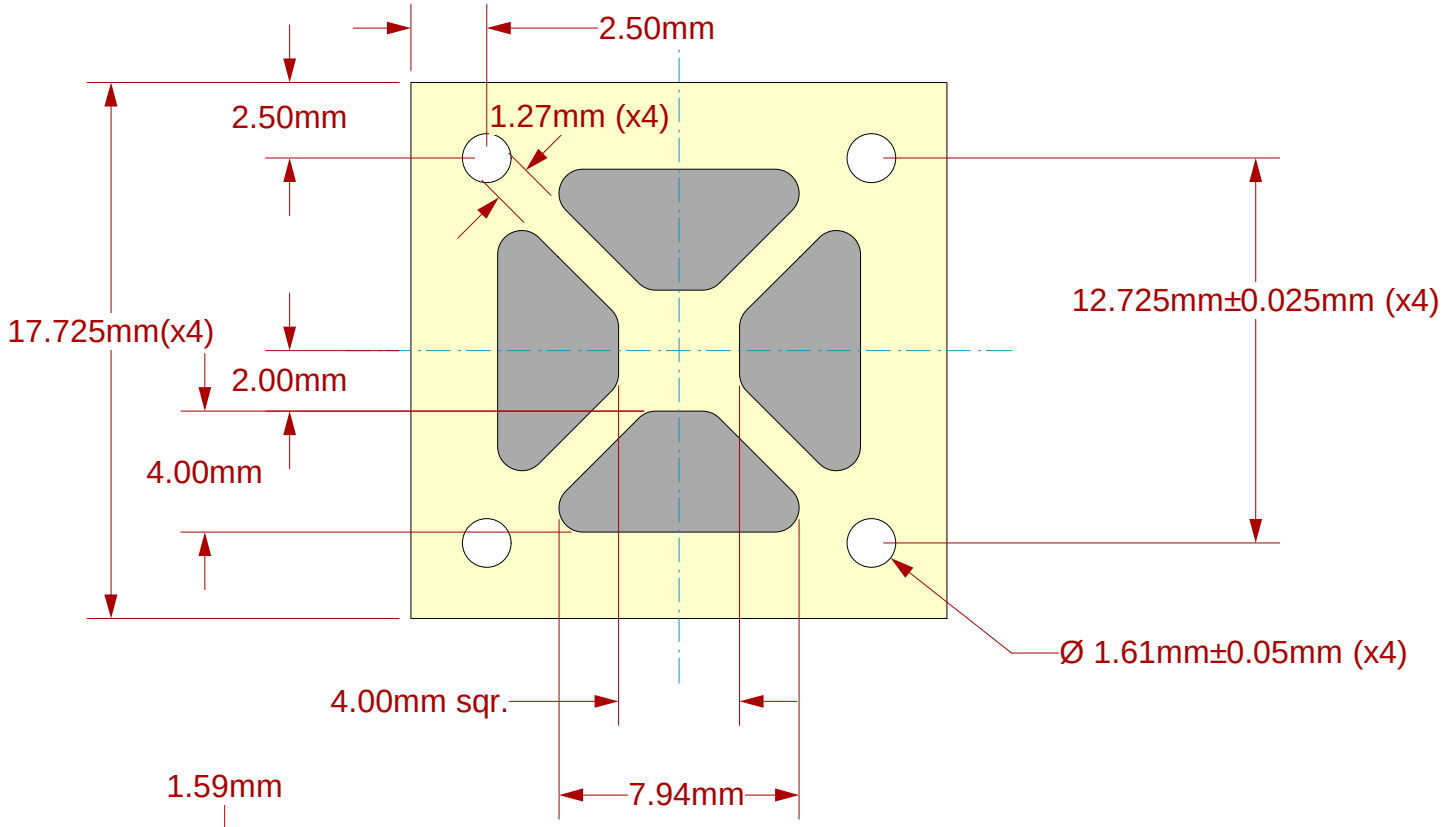

Top View

Side View

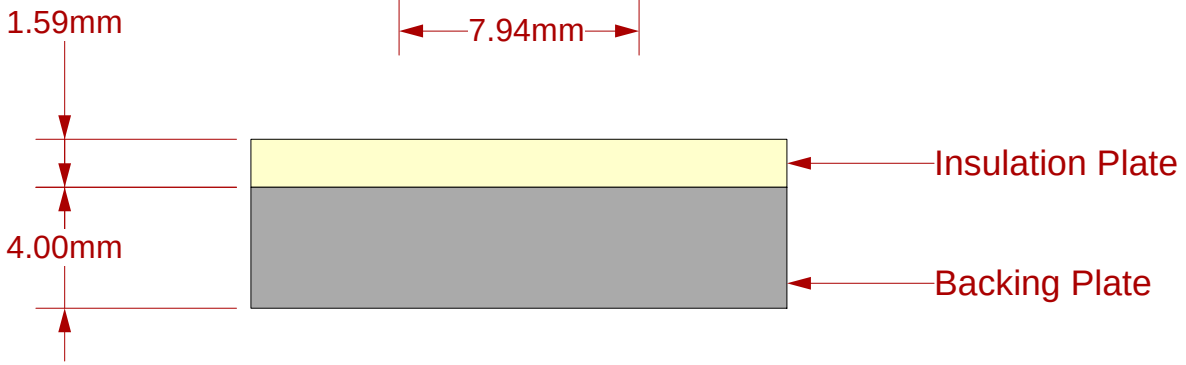

Side View

Description: Backing Plate with Insulation Plate

CG-BGA-5004 Drawing	Status: Released	Scale: 4:1	Rev: B
© 2010 IRONWOOD ELECTRONICS, INC. Tele: (952) 229-8200 www.ironwoodelectronics.com	Drawing: S.Natarajan	Date: 04/02/2010	
	File: CG-BGA-5004 Dwg.mcd	Modified: 09/17/14	

All dimensions are in mm.
All tolerences are +/- 0.125mm.
(Unless stated otherwise)