Low Profile SMD Fast Recovery Rectifiers

COMCHIP
SMD Diodes Specialist

CFRMT101-HF Thru. CFRMT107-HF

Reverse Voltage: 50 to 1000 Volts
Forward Current: 1.0 Amp
RoHS Device
Halogen Free

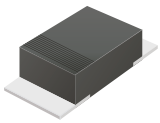

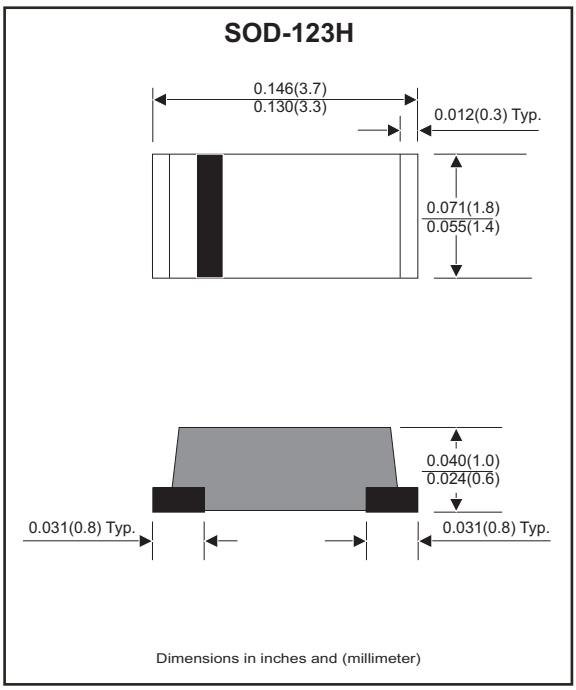

Features

-Excellent power dissipation offers better reverse leakage current and thermal resistance.
-Low profile package is 40% thinner than standards SOD-123.
-Tiny plastic SMD package.
-High current capability.
-Fast switching for high efficiency.
-High surge current capability.
-Glass passivated chip junction.
-Lead-free parts meet RoHS requirments.

Mechanical data

-Epoxy: UL94-V0 rated flame retardant.
-Case: Molded plastic, SOD-123H/MINI SMA
-Terminals: Solderable per MIL-STD-750, Method 2026.
-Polarity: Indicated by cathode band.
-Mounting Position: any
-Weight: 0.011 grams approx.

Maximum Ratings (at T_A=25°C unless otherwise noted)

Parameter		Symbol	CFRMT 101-HF	CFRMT 102-HF	CFRMT 103-HF	CFRMT 104-HF	CFRMT 105-HF	CFRMT 106-F	CFRMT 107-HF	Unit
Max. Repetitive peak reverse voltage		V_{RRM}	50	100	200	400	600	800	1000	V
Max. Continuous reverse voltage		V_R	50	100	200	400	600	800	1000	V
Max. RMS voltage		V_{RMS}	35	70	140	280	420	560	700	V
Max. Forward rectified current Ambient temperature=55°C		I_O	1.0							A
Max. Forward voltage @ I_F=1.0A		V_F	1.3							V
Max. Reverse recovery time (note 1)		T_{RR}	150			250	500			ns
Max. Forward surge current 8.3ms singe half sine-wave superimposed on rated load (JEDEC method)		I_{FSM}	25							A
Max. Reverse current	V_R=V_{RRM} T_J=25°C	I_R	5.0							μA
	V_R=V_{RRM} T_J=100°C		100							
Typ. Thermal resistance Junction to ambient air		$R_{\theta JA}$	42							°C/W
Typ. Diode Junction capacitance f=1MHz and applied 4V DC reverse voltage		C_J	15							pF
Operating junction temperature		T_J	-55 to +150							°C
Storage temperature range		T_{STG}	-65 to +175							°C

Note 1. Reverse recovery time test condition,I_F=0.5A,I_R=1.0A,I_{RR}=0.25A

Rating and Characteristic Curves (CFRMT101-HF Thru. CFRMT107-HF)

Fig.1- Typical Forward Current Derating Curve

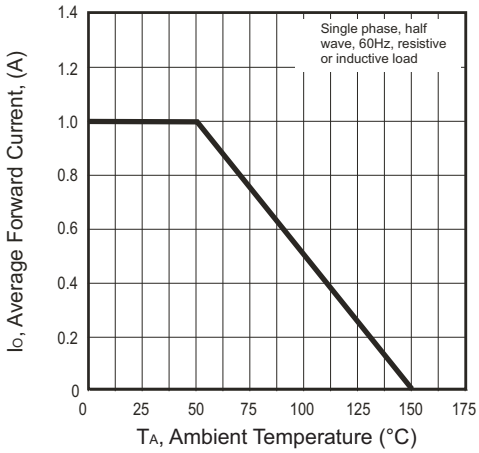

Fig.2- Typical Forward Characteristics

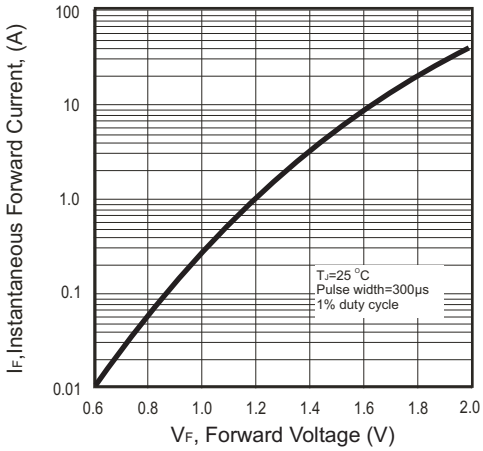

Fig.3- Test Circuit Diagram and Reverse Recovery Time Characteristics

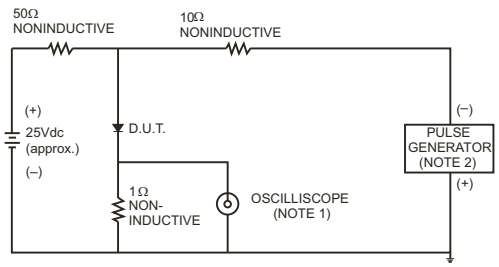

NOTES: 1. Rise Time= 7ns max., Input Impedance= 1 megohm.22pF.

2. Rise Time= 10ns max., Source Impedance= 50 ohms.

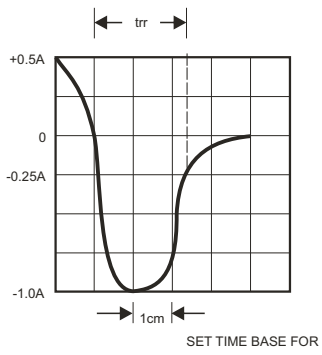

SET TIME BASE FOR

50 / 10ns / cm

Fig.4- Maximum Non-repetitive Forward Surge Current

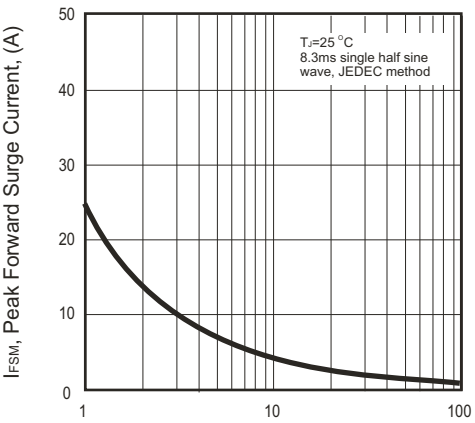

Fig.5- Typical Junction Capacitance

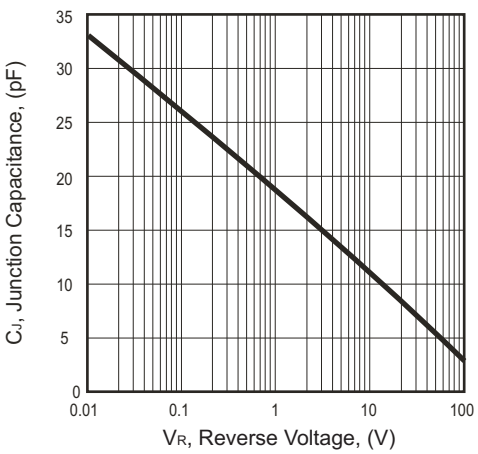

Reel Taping Specification

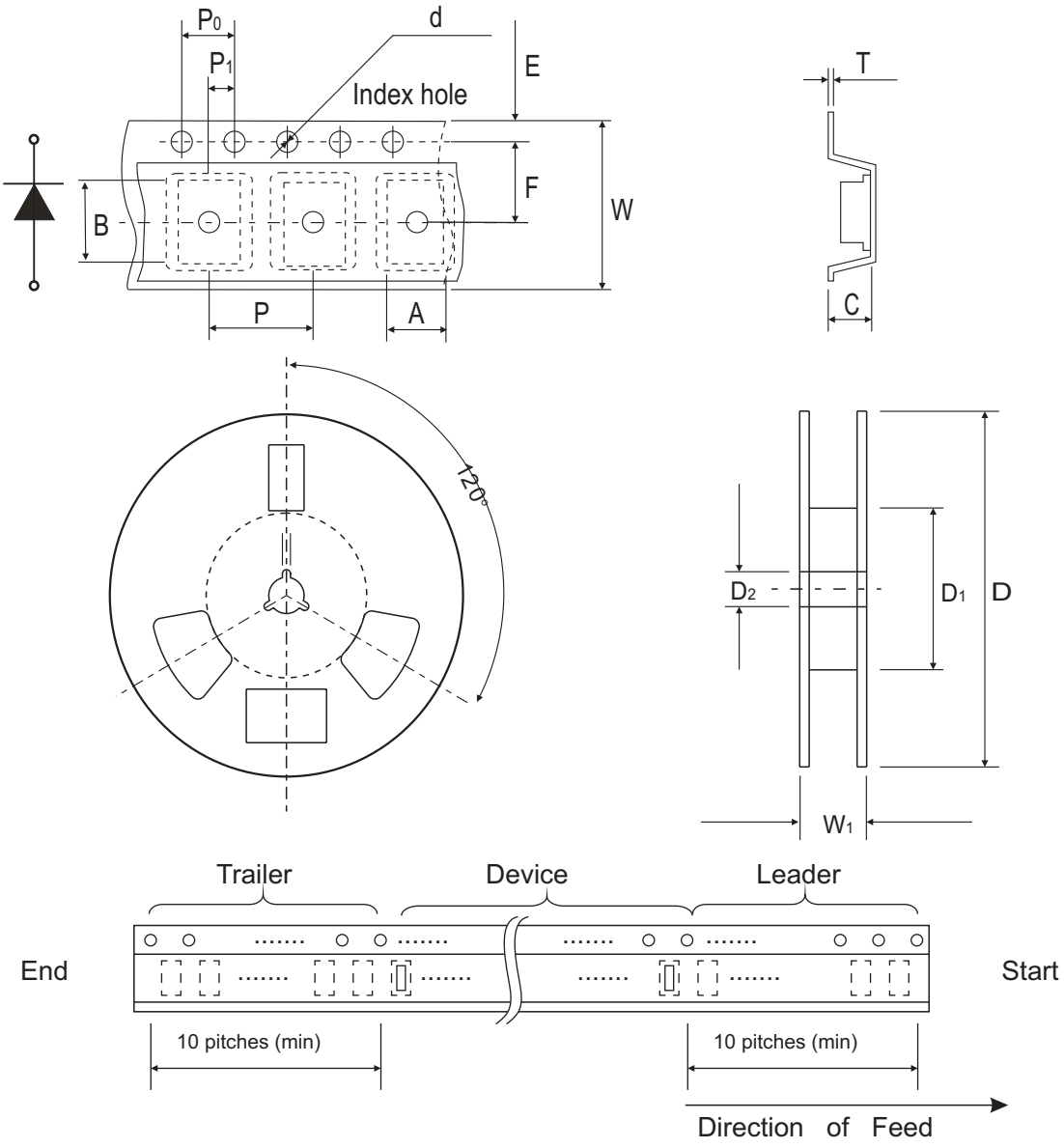

	SYMBOL	A	B	C	d	D	D_1	D_2
SOD-123H	(mm)	2.00 ± 0.10	3.85 ± 0.10	1.10 ± 0.10	1.50 ± 0.10	178 ± 2.00	62.0 MIN.	13.0 ± 0.50
	(inch)	0.079 ± 0.004	0.152 ± 0.004	0.043 ± 0.004	0.059 ± 0.004	7.00 ± 0.079	2.440 MIN.	0.512 ± 0.020

	SYMBOL	E	F	P	P_0	P_1	T	W	W_1
SOD-123H	(mm)	1.75 ± 0.10	3.50 ± 0.10	4.00 ± 0.10	4.00 ± 0.10	2.00 ± 0.10	0.23 ± 0.10	8.00 ± 0.30	11.40 ± 1.0
	(inch)	0.069 ± 0.004	0.138 ± 0.004	0.157 ± 0.004	0.157 ± 0.004	0.079 ± 0.004	0.009 ± 0.004	0.315 ± 0.012	0.449 ± 0.039

Pinning information

Pin	Simplified outline	Symbol
PIN 1 Cathode PIN 2 Anode		

Marking Code

Part Number	Marking Code
CFRMT101-HF	F1
CFRMT102-HF	F2
CFRMT103-HF	F3
CFRMT104-HF	F4
CFRMT105-HF	F5
CFRMT106-HF	F6
CFRMT107-HF	F7



xx = Product type marking code

Suggested PAD Layout

SIZE	SOD-123H	
	(mm)	(inch)
A	3.00	0.118
B	1.30	0.051
C	1.80	0.071
D	4.30	0.169
E	1.70	0.067

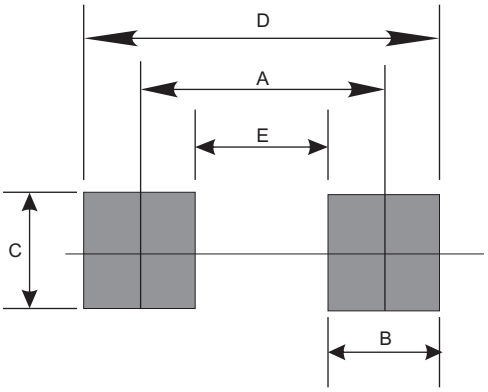

Standard Package

Case Type	REEL PACK (T/R)				
	REEL (EA)	BOX (EA)	CARTON (EA)	Reel Size (inch)	Type Mat'l
SOD-123H	3000	30000	240000	7	Plastic