Rev	AWO #	Description	Date	Appr
-		RELEASED	11/04/10	

APPROVED: _____

DATE: _____ TITLE: _____

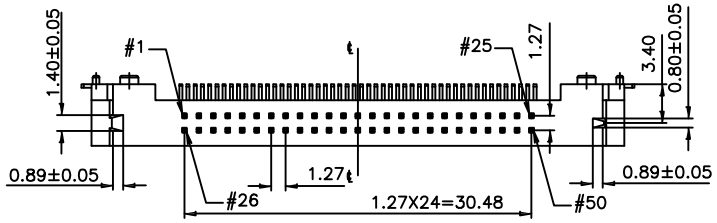

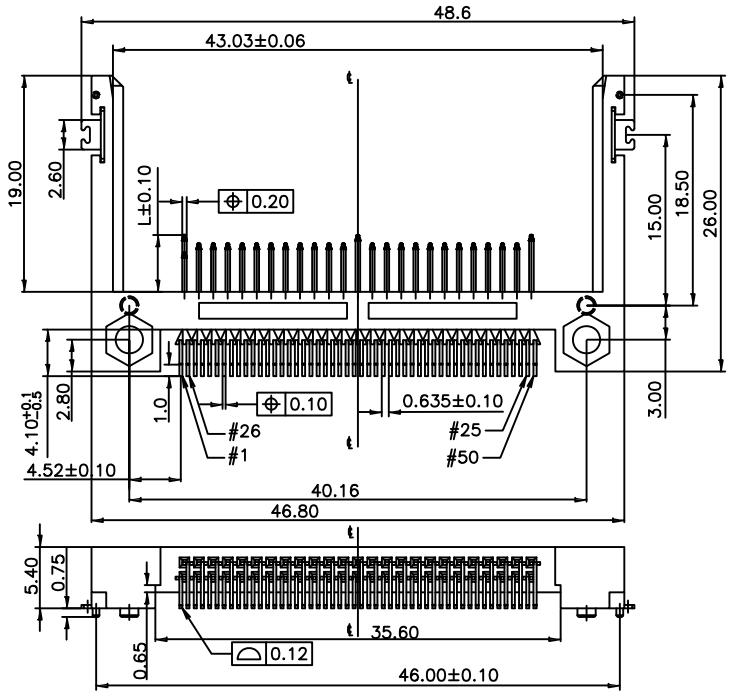

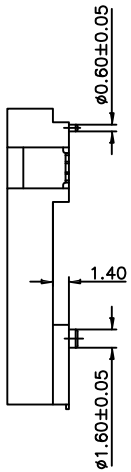

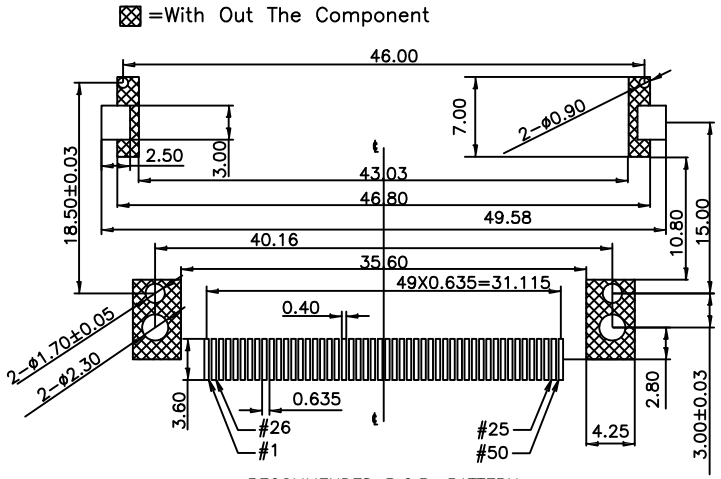

RECOMMENDED P.C.B. PATTERN
TOLERANCES: ±0.05mm

POWER	5.00mm	1,13,38,50
GENERAL	4.25mm	all other pins
DETECT	3.50mm	25,26
Pin type	Interface Dim. L	Pin No.

SPECIFICATIONS:
Material:
Insulator: Hi-temp thermoplastic, rated UL 94V-0
Insulator color: White
Contacts: Copper Alloy
Mount Ear: Copper Alloy
Plating:
Gold flash over Nickel underplate on contact area,
Tin over Copper underplate on SMT tails.
Electrical:
Operating voltage: 100 VAC max
Current rating: 0.5 Amps max
Contact resistance: 40 mohms
Insulation resistance: 1000 Mohms min
Dielectric withstanding voltage: 500 VAC for 1 minute
Temperature Rating:
Operating temperature: -20°C to +90°C
Environmental:
Lead free, RoHS compliant.
Recommended soldering temp: 260°C for 5 sec.

RoHS COMPLIANT

UNLESS OTHERWISE SPECIFIED
ALL DIMENSIONS ARE MM
TOLERANCES: EXCEPT AS NOTED

INCHES		HOLES	
.X	± .10	Ø.X	±.10
.XX	± .020	Ø.XX	±.015
.XXX	± .015	Ø.XXX	±.010

APPROVALS		DATE
DRAWN	DY	10/04/10
CHECKED		
APPROVED		

ADAM TECH
909 Rahway Avenue, Union, NJ 07083
Phone: 908-687-5000 Fax: 908-687-5710

TITLE
CF SOCKET, SLIM TYPE, REVERSE MOUNT
STAND OFF 1.4MM

SIZE	PART NO.	REV.
X	CFR-50-A-SG-C-1	-

REF: S00009T | SCALE: NTS | SHEET 1 OF 1