0.8-1.0 GHz
+34 dBm Power GaAs FET

November 2007 - Rev 15-Nov-07

CFK2162-P1

Features

- High Gain
- +34 dBm Power Output
- Proprietary Power FET Process
- >45% Linear Power Added Efficiency
- +29 dBm with 30 dBc Third Order Products
- Surface Mount SO-8 Power Package

Description

The CFK2162-P1 is a high-gain FET intended for driver amplifier applications in high-power systems, and output stage usage in medium power applications at power levels up to +34 dBm. The device is easily matched and provides excellent linearity at 2 Watts. Manufactured in Mimix's power FET process, this device is assembled in an industry standard surface mount SO-8 power package that is compatible with high volume, automated board assembly techniques.

Specifications (TA = 25 °C)

The following specifications are guaranteed at room temperature in Mimix test fixtures at 850 MHz.

Parameters	Conditions	Min	Typ	Max	Units
V_d = 8V, I_d = 800 mA (Quiescent)					
P_{-1dB}		33.0	34.0	—	dBm
SSG		19.0	20.0	—	dB
3rd Order Products (1)		26	30	—	dBc
Efficiency	@ P1dB	—	43	—	%
V_d = 5V, I_d = 350 mA (Quiescent)					
P_{-1dB}		—	30.0	—	dBm
SSG		—	18.0	—	dB
V_d = 5V, I_d = 1200 mA (Quiescent)					
P_{-1dB}		—	33.0	—	dBm
SSG		—	19.0	—	dB

Parameters	Conditions	Min	Typ	Max	Units
g_m	Vds = 2.0V, Vgs = 0V	—	1700	—	mS
I_{dss}	Vds = 2.0V, Vgs = 0V	—	2.8	—	A
V_p	Vds = 3.0V, Ids = 65 mA	—	-1.8		Volts
BV_{GD} (3)	Igd = 6.5 mA	18	20	—	Volts
Θ_{JL} (2)	@150°C TCH	—	10	—	°C/W

Notes:
1. Sum to two tones with 1 MHz spacing = 29 dBm.
2. See thermal considerations information on page 4.
3. Max ($+V_d$) and ($-V_g$) under linear operation. Max potential difference across the device in RF compression ($2V_d + |-V_g|$) not to exceed the minimum breakdown voltage (V_{br}) of +18V.

Package Diagram

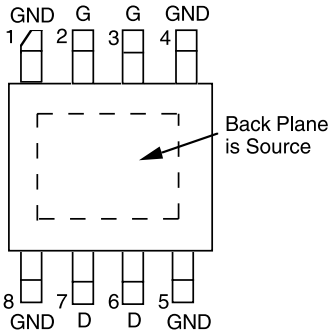

Applications

- ISM Band Base Stations and Terminals
- Cellular Base Stations and Terminals
- Wireless Local Loop

Absolute Maximum Ratings

Parameter	Symbol	Rating
Drain-Source Voltage	V_{DS}	12V (3)
Gate-Source Voltage	V_{GS}	-5V
Drain Current	I_{DS}	Idss
Continuous Dissipation	P_T	10W
Channel Temperature	T_{CH}	175°C
Storage Temperature	T_{STG}	-65°C to +175°C

Package Physical Dimensions

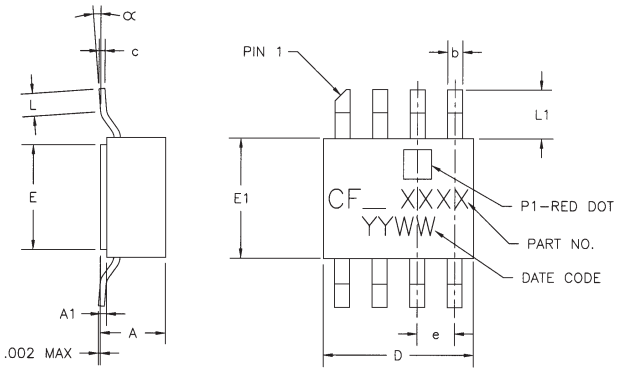

DIMENSION	MINIMUM	NOMINAL	MAXIMUM
A		.086[2.184]	.100[2.540]
A1	.005[.1270]	.008[.2032]	.011[.2794]
b	.017[.4318]	.020[.5080]	.023[.5842]
c	.007[.1778]	.008[2032]	.009[.2286]
D	.195[4.953]	.200[5.080]	.205[5.207]
E	.135[3.429]	.140[3.556]	.145[3.683]
E1	.155[3.937]	.160[4.064]	.165[4.191]
e		.050[1.270]	
L	.020[.5080]		.040[1.016]
L1	.055[1.397]	.065[1.651]	.075[1.905]
α	0°		8°

DIMENSIONS IN INCHES [MILIMETERS]

Characteristic Data and Specifications are subject to change without notice. ©2007 Mimix Broadband, Inc.
Export of this item may require appropriate export licensing from the U.S. Government. In purchasing these parts, U.S. Domestic customers accept their obligation to be compliant with U.S. Export Laws.

Typical Scattering Parameters

Frequency (GHz)	S_{11} Mag	S_{11} Ang	S_{21} Mag	S_{21} Ang	S_{12} Mag	S_{12} Ang	S_{22} Mag	S_{22} Ang
(TA = 25°C, Vds = 5 V, Ids = 350 mA)								
0.6	0.946	-162.45	4.973	86.73	0.017	11.14	0.739	172.95
0.7	0.945	-162.45	4.973	86.73	0.017	11.14	0.739	172.95
0.8	0.946	-171.49	3.657	79.26	0.019	8.47	0.746	170.91
0.9	0.947	-174.16	3.22	76.4	0.018	7.15	0.749	170.28
1.0	0.946	-176.06	2.885	73.75	0.018	9.37	0.748	169.73
1.1	0.946	-177.58	2.623	71.82	0.018	6.8	0.747	169.56
1.2	0.945	-178.58	2.424	69.66	0.019	6.59	0.746	169.16
1.3	0.944	-179.55	2.27	67.7	0.019	6.53	0.742	168.8
1.4	0.942	179.53	2.154	65.68	0.02	7.04	0.739	168.03
1.5	0.938	178.31	2.055	63.25	0.02	4.93	0.73	167.15
2.0	0.918	166.09	1.777	46.63	0.025	-1.23	0.694	155.54
2.5	0.915	144.67	1.448	24.9	0.025	-19.64	0.703	137.27
3.0	0.941	132.34	1.033	10.11	0.022	-27.73	0.76	128.69
3.5	0.957	134.66	0.803	6.12	0.02	-21.78	0.787	132.92
4.0	0.94	138.76	0.803	1.66	0.023	-20.57	0.74	136.51
(TA = 25°C, Vds = 5 V, Ids = 1200 mA)								
0.6	0.95	-165	5.311	84.94	0.014	13.61	0.747	17.19
0.7	0.951	-169.94	4.491	80.91	0.013	15.25	0.75	170.93
0.8	0.951	-173.53	3.878	77.66	0.014	13.21	0.75	170.03
0.9	0.952	-176.07	3.406	74.74	0.013	13.59	0.75	169.43
1.0	0.951	-177.94	3.044	72.23	0.014	14.39	0.749	168.92
1.1	0.951	-179.34	2.767	70.37	0.014	13.01	0.749	168.72
1.2	0.951	179.72	2.561	68.34	0.014	14.6	0.745	168.29
1.3	0.951	178.92	2.391	66.48	0.015	13.62	0.741	167.98
1.4	0.949	177.92	2.272	64.41	0.015	14.21	0.734	167.24
1.5	0.946	176.83	2.169	61.99	0.016	14.13	0.728	166.28
2.0	0.929	165.15	1.88	45.76	0.02	7.43	0.69	154.9
2.5	0.925	144.23	1.529	24.16	0.022	-7.75	0.698	136.7
3.0	0.947	131.72	1.09	9.25	0.018	-17.77	0.757	127.79
3.5	0.961	133.41	0.853	4.59	0.017	-13.03	0.779	131.26
4.0	0.945	137.83	0.85	0.36	0.021	-8.72	0.73	134.73
(TA = 25°C, Vds = 8 V, Ids = 800 mA)								
0.6	0.941	-164.65	5.654	83.55	0.015	10.74	0.676	174.61
0.7	0.944	-169.57	4.772	79.47	0.014	10.38	0.682	173.44
0.8	0.946	-172.92	4.131	75.86	0.015	9.99	0.685	172.69
0.9	0.947	-175.57	3.625	72.68	0.014	10.72	0.687	172.32
1.0	0.947	-177.32	3.25	70.11	0.015	8.2	0.688	171.96
1.1	0.946	-178.65	2.944	67.96	0.015	8.47	0.688	172.02
1.2	0.947	-179.63	2.717	65.66	0.015	9.51	0.687	171.82
1.3	0.945	179.49	2.535	63.48	0.015	7.84	0.684	171.67
1.4	0.944	178.52	2.397	61.32	0.016	8.5	0.68	171.06
1.5	0.941	177.34	2.85	58.65	0.016	9.62	0.674	170.41
2.0	0.923	165.04	12.949	41.52	0.019	-1.07	0.639	159.85
2.5	0.92	143.82	1.579	19.18	0.02	-12.64	0.653	141.46
3.0	0.944	131.73	1.116	3.58	0.018	-21.43	0.722	132.33
3.5	0.96	134.09	0.857	-1.39	0.016	-16.54	0.762	136.36
4.0	0.942	137.96	0.841	-6.32	0.02	-10.57	0.723	140.71

RF Match Data shown in the performance graphs was taken in the test circuits shown at right and on page 3. Layout is important for proper operation. Phase length of input and output 50Ω line varies as a function of exact desired frequency of operation. Output shunt inductor effects output performance. Mimix recommends the use of a high impedance printed inductor Lambda/4 in length. Please contact the factory for an evaluation board and/or more detailed application support.

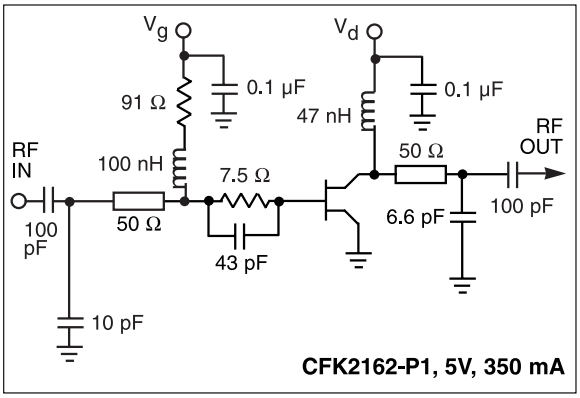

CFK2162-P1, 5V, 350 mA

Characteristic Data and Specifications are subject to change without notice. ©2007 Mimix Broadband, Inc.
Export of this item may require appropriate export licensing from the U.S. Government. In purchasing these parts, U.S. Domestic customers accept their obligation to be compliant with U.S. Export Laws.

Typical Performance

Power Output & Power Added Efficiency vs Power Input
850 MHz, V_{DS} = 8 V, I_{DS} = 800 mA

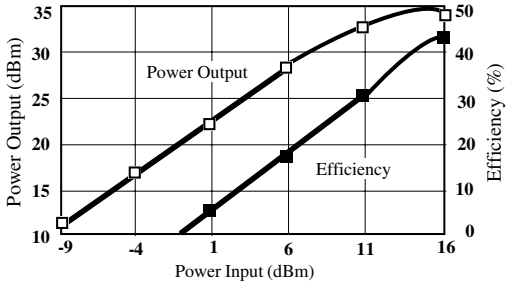

Power Output & Power Added Efficiency vs Power Input
850 MHz, V_{DS} = 5 V, I_{DS} = 1.2 A

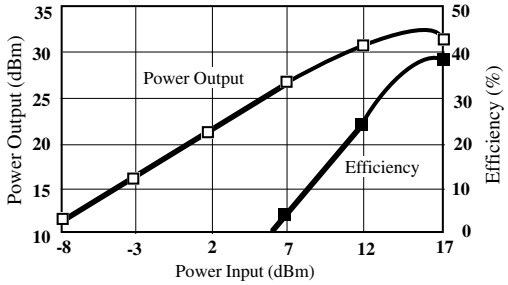

Power Output and Gain vs Frequency
V_{DS} =8V, I_{DS} = 800 mA

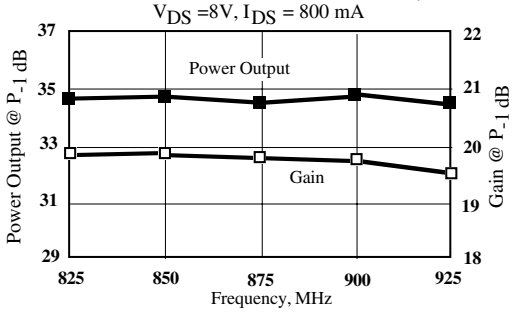

Power Output and Gain vs Frequency
V_{DS} =5V, I_{DS} = 1200 mA

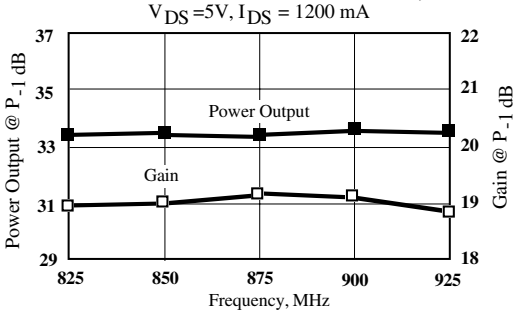

Power Output & 3rd Order Products vs Power Input
850 MHz, V_{DS} = 8 V, I_{DS} = 800 mA

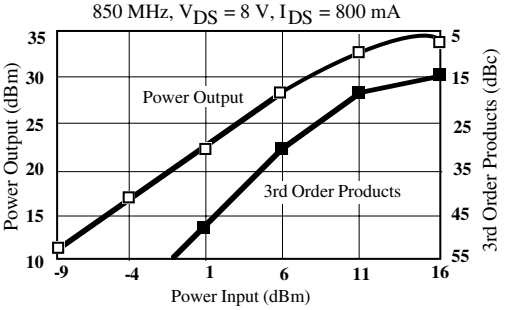

Power Output & 3rd Order Products vs Power Input
850 MHz, V_{DS} = 5 V, I_{DS} = 1.2 A

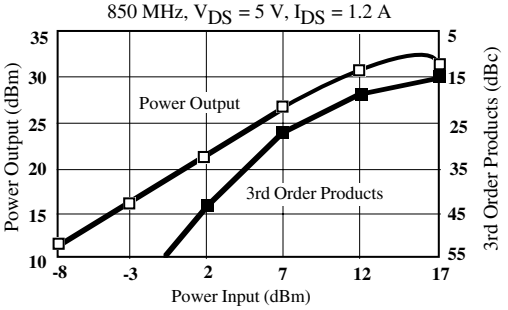

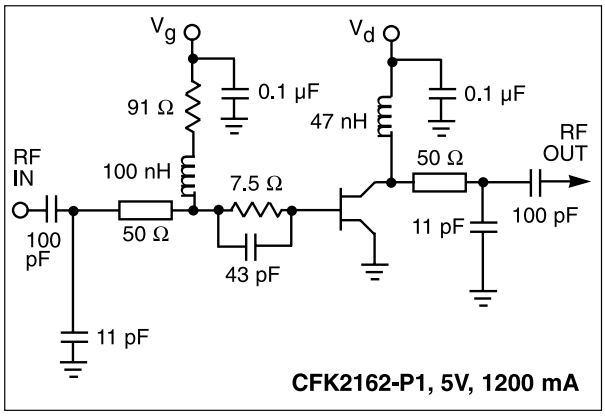

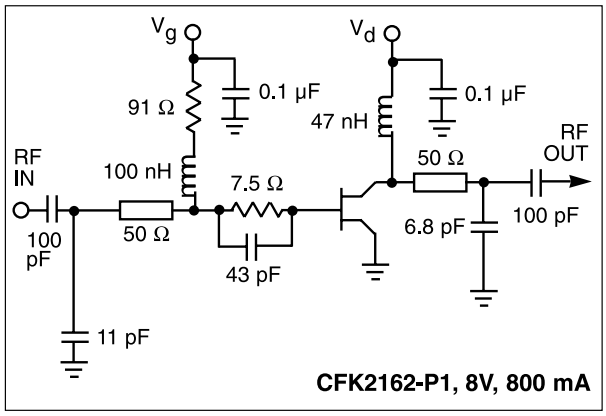

Characteristic Data and Specifications are subject to change without notice. ©2007 Mimix Broadband, Inc.
Export of this item may require appropriate export licensing from the U.S. Government. In purchasing these parts, U.S. Domestic customers accept their obligation to be compliant with U.S. Export Laws.

Thermal Conditions

The data shown was taken on a 31 mil thick FR-4 board with 1 ounce copper on both sides. The board was mounted to a base plate with 3 screws as shown.The screws bring the top side copper temperature to the same value as the baseplate. The thermal resistance to the indicated reference lead, Θ_{JL}, is 10 °C/W. The thermal resistance to the reference screw is 12 °C/W.

1. Use 1 or 2 ounce copper if possible.

2. Solder all eight leads of the CFK2162-P1 package to the appropriate electrical connection.

3. Solder the copper pad on the backside of the CFK2162-P1 package to the ground plane.

4. Use a large ground pad area with many plated through-holes as shown.

5. If possible, use at least one screw no more than 0.2 inches from the CFK2162-P1 package to provide a low thermal resistance path to the baseplate of the package.

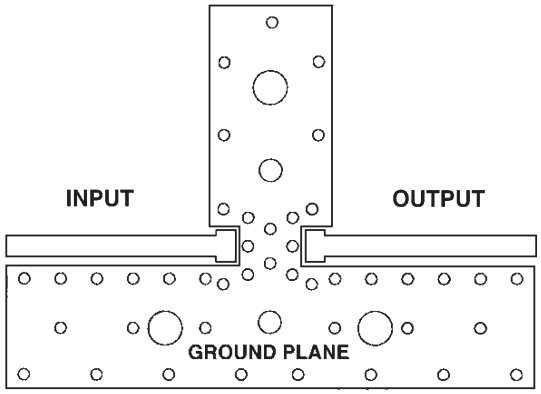

BOARD LAYOUT

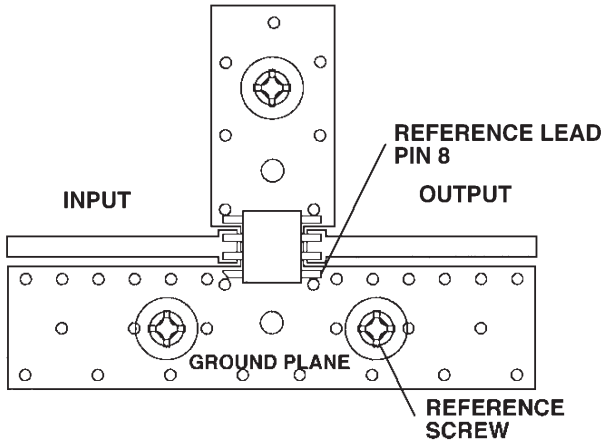

THERMAL MOUNTING DIAGRAM

Ordering Information

The CFK2162-P1 power stage is available in an SO-8 surface mount package. Devices are available in tape and reel. Ordering part numbers are listed.

Part Number for Ordering	Function	Package
CFK2162-P1	800 - 900 MHz Power Stage	SO-8 surface mount power package
CFK2162-P1-000T	800 - 900 MHz Power Stage	SO-8 surface mount power package in tape and reel

Characteristic Data and Specifications are subject to change without notice. ©2007 Mimix Broadband, Inc.
Export of this item may require appropriate export licensing from the U.S. Government. In purchasing these parts, U.S. Domestic customers accept their obligation to be compliant with U.S. Export Laws.

Handling and Assembly Information

CAUTION! - Mimix Broadband MMIC Products contain gallium arsenide (GaAs) which can be hazardous to the human body and the environment. For safety, observe the following procedures:

- Do not ingest.
- Do not alter the form of this product into a gas, powder, or liquid through burning, crushing, or chemical processing as these by-products are dangerous to the human body if inhaled, ingested, or swallowed.
- Observe government laws and company regulations when discarding this product. This product must be discarded in accordance with methods specified by applicable hazardous waste procedures.

Life Support Policy - Mimix Broadband's products are not authorized for use as critical components in life support devices or systems without the express written approval of the President and General Counsel of Mimix Broadband. As used herein: (1) Life support devices or systems are devices or systems which, (a) are intended for surgical implant into the body, or (b) support or sustain life, and whose failure to perform when properly used in accordance with instructions for use provided in the labeling, can be reasonably expected to result in a significant injury to the user. (2) A critical component is any component of a life support device or system whose failure to perform can be reasonably expected to cause the failure of the life support device or system, or to affect its safety or effectiveness.

Package Attachment - This packaged product from Mimix Broadband is provided as a rugged surface mount package compatible with high volume solder installation. Care should be taken not to apply heavy pressure to the top or base material to avoid package damage. Vacuum tools or other suitable pick and place equipment may be used to pick and place this part. Care should be taken to ensure that there are no voids or gaps in the solder connection so that good RF, DC and ground connections are maintained. Voids or gaps can eventually lead not only to RF performance degradation, but reduced reliability and life of the product due to thermal stress.

Mimix Lead-Free RoHS Compliant Program - Mimix has an active program in place to meet customer and governmental requirements for eliminating lead (Pb) and other environmentally hazardous materials from our products. All Mimix RoHS compliant components are form, fit and functional replacements for their non-RoHS equivalents. Lead plating of our RoHS compliant parts is 100% matte tin (Sn) over copper alloy and is backwards compatible with current standard SnPb low-temperature reflow processes as well as higher temperature (260°C reflow) "Pb Free" processes.

Characteristic Data and Specifications are subject to change without notice. ©2007 Mimix Broadband, Inc.
Export of this item may require appropriate export licensing from the U.S. Government. In purchasing these parts, U.S. Domestic customers accept their obligation to be compliant with U.S. Export Laws.