NPN SILICON POWER TRANSISTOR

CFC4662

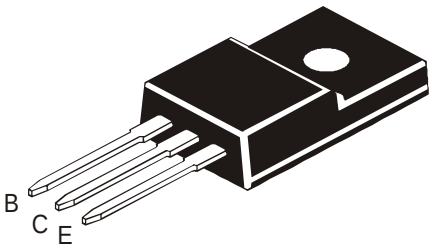

TO-220FP Fully Isolated Plastic Package

ABSOLUTE MAXIMUM RATINGS

DESCRIPTION	SYMBOL	VALUE	UNIT
Collector Base Voltage	V_{CBO}	500	V
Collector Emitter Voltage	V_{CEO}	400	V
Emitter Base Voltage	V_{EBO}	10	V
RMS Isolation Voltage (for 1sec, R.H. <30%, T_a = 25°C)	** V_{ISOL} (a) (b)	3500 1500	V_{RMS} V_{RMS}
Collector Current (DC)	I_C	5	A
Collector Current (Pulse)	I_C	10	A
Base Current	I_B	2	A
Power Dissipation upto T_c=25°C	P_C	30	W
Junction Temperature	T_j	150	°C
Storage Temperature	T_{stg}	- 55 to +150	°C

**** RMS Isolation Voltage: (a) 3500 V_{RMS} with Package in Clip Mounting Position (b) 1500 V_{RMS} with Package in Screw Mounting Position (for 1sec, R.H.<30%, T_a=25°C; Pulse Test: Pulse Width ≤300ms, Duty Cycle≤2%)**

ELECTRICAL CHARACTERISTICS (T_a=25°C unless specified otherwise)

DESCRIPTION	SYMBOL	TEST CONDITION	MIN	MAX	UNIT
Collector Cut Off Current	I_{CBO}	V_{CB}=500V, I_E=0		100	µA
Emitter Cut Off Current	I_{EBO}	V_{EB}=10V, I_C=0		100	µA
Collector Emitter Voltage	V_{CEO}	I_C=25mA, I_B=0	400		V
DC Current Gain	h_{FE}	I_C=1.5A, V_{CE}=4V	10	30	
Collector Emitter Saturation Voltage	$V_{CE\ (sat)}$	I_C=1.5A, I_B=0.3A		0.5	V
Base Emitter Saturation Voltage	$V_{BE\ (sat)}$	I_C=1.5A, I_B=0.3A		1.3	V
Transition Frequency	f_T	I_C=0.3A, V_{CE}=12V	TYP 20		MHz
Collector Capacitance	C_{ob}	I_E=0, V_{CB}=10V, f=1MHz	TYP 30		pF

SWITCHING TIMES

Turn On Time	t_{on}	V_{CC}=200V, R_L=133Ω, I_C=1.5A		1.0	µs
Storage Time	t_{stg}	V_{BB1}=10V, V_{BB2}= -5V		2.5	µs
Fall Time	t_f	I_{B1} =0.15A, I_{B2} = -0.3A		0.5	µs

TO-220FP Fully Isolated Plastic Package

TO-220FP Fully Isolated Plastic Package

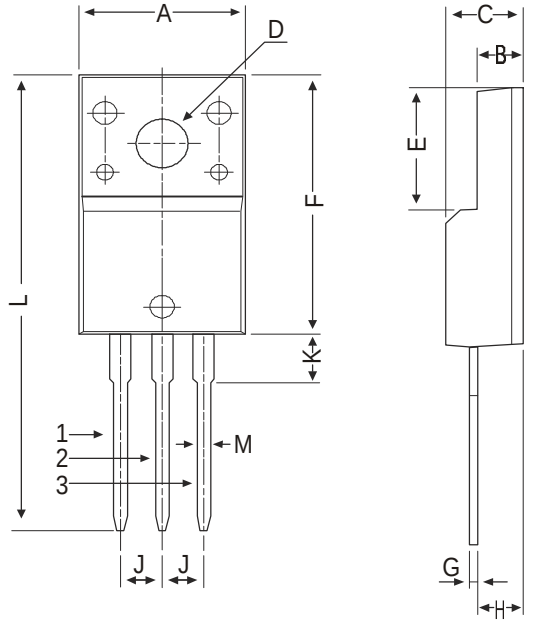

DIM	MIN	MAX
A	9.96	10.36
B	2.60	3.00
C	4.50	4.90
D	3.10	3.30
E	7.90	8.20
F	16.87	17.27
G	0.45	0.50
H	2.56	2.96
J	2.34	2.74
K	—	3.08
L	—	30.05
M	—	0.80

All diminsions in mm.

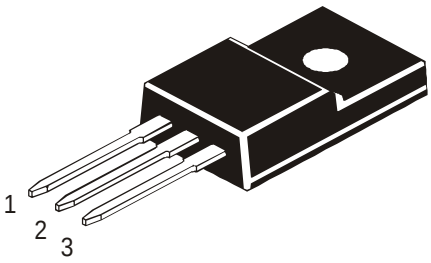

Pin Configuration

1. Base
2. Collector
3. Emitter

TO-220 FP Tube Packing

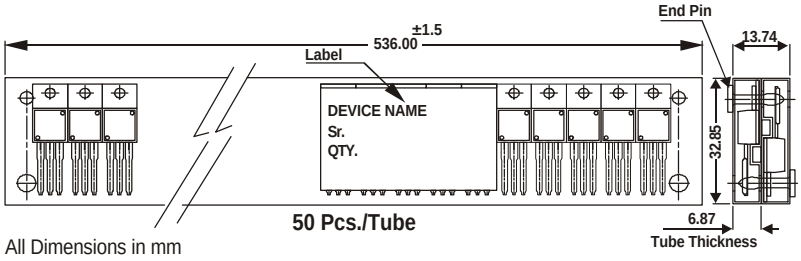

All Dimensions in mm

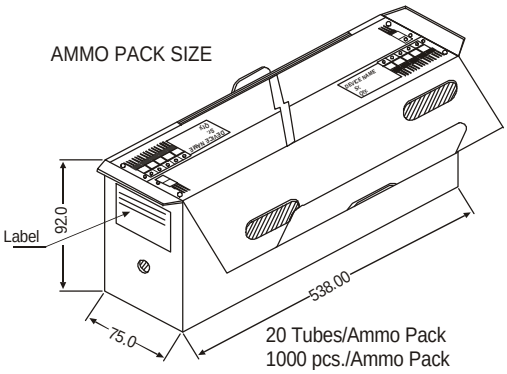

20 Tubes/Ammo Pack
1000 pcs./Ammo Pack

Mounting Option for TO-220FP

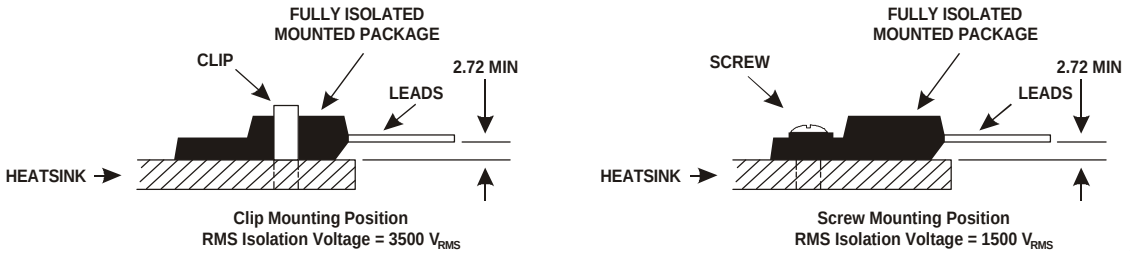

All dimensions in mm

Packing Detail

PACKAGE	STANDARD PACK		INNER CARTON BOX		OUTER CARTON BOX		
	Details	Net Weight/Qty	Size	Qty	Size	Qty	Gr Wt
TO-220FP	200 pcs/polybag	396 gm/200 pcs	3" x 7.5" x 7.5"	1K	17" x 15" x 13.5"	16K	36 kgs
	50 pcs/tube	135 gm/50 pcs	3.5" x 3.7" x 21.5"	1K	19" x 19" x 19"	10K	28 kgs

TO-220FP Fully Isolated Plastic Package

Disclaimer

The product information and the selection guides facilitate selection of the CDIL's Discrete Semiconductor Device(s) best suited for application in your product(s) as per your requirement. It is recommended that you completely review our Data Sheet(s) so as to confirm that the Device(s) meet functionality parameters for your application. The information furnished in the Data Sheet and on the CDIL Web Site/CD is believed to be accurate and reliable. CDIL however, does not assume responsibility for inaccuracies or incomplete information. Furthermore, CDIL does not assume liability whatsoever, arising out of the application or use of any CDIL product; neither does it convey any license under its patent rights nor rights of others. These products are not designed for use in life saving/support appliances or systems. CDIL customers selling these products (either as individual Discrete Semiconductor Devices or incorporated in their end products), in any life saving/support appliances or systems or applications do so at their own risk and CDIL will not be responsible for any damages resulting from such sale(s).

CDIL strives for continuous improvement and reserves the right to change the specifications of its products without prior notice.

CDIL is a registered Trademark of
Continental Device India Limited
C-120 Naraina Industrial Area, New Delhi 110 028, India.
Telephone + 91-11-2579 6150, 5141 1112 Fax + 91-11-2579 5290, 5141 1119
email@cdil.com www.cdilsemi.com