OVERVIEW

The CF5761 series are analog clock ICs with alarm functions that derive their timing from a standard 32.768kHz oscillator element. Two kinds of alarm output are available and can be selected using a control pin. The series lineup comprises devices with various alarm patterns and motor outputs for a wide range of clock specifications. They support convenient functions, such as input chattering elimination circuit and power-on clear functions. They are fabricated using Molybdenum-gate CMOS process, realizing low power consumption.

FEATURES

- 32.768kHz fundamental frequency oscillator
- Feedback resistor and oscillator capacitor C_D built-in
- Supports various alarms: piezo-alarm, electromagnetic speaker
- Snooze function
- Switchable alarm function using SEL pin
- Alarm auto-stop function (see series lineup)
- Input chattering elimination circuit (SEL, AI, SN)
- Test function
- 1.2 to 3.6V operating supply voltage
- Molybdenum-gate CMOS process
- Chip form (CF5761××)

PAD LAYOUT

(Unit: µm)

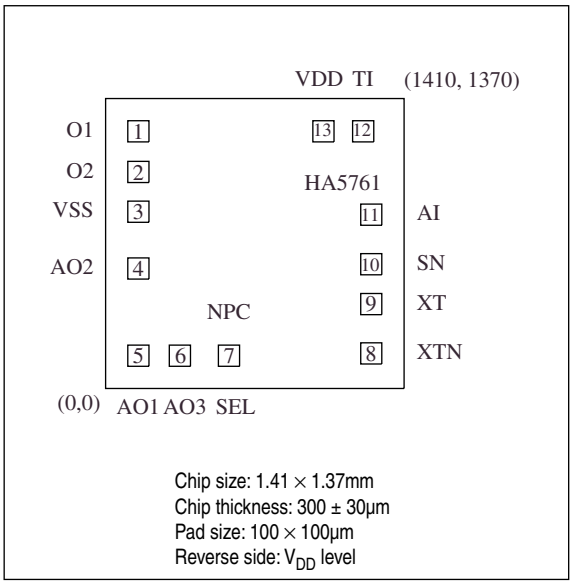

Chip size: 1.41 × 1.37mm
Chip thickness: 300 ± 30µm
Pad size: 100 × 100µm
Reverse side: V_{DD} level

ORDERING INFORMATION

Device	Package
CF5761××	Chip form

SERIES LINEUP

		CF5761CA						CF5761EA						CF5761HA					
Built-in capacitance[1]	C_G [pF]	4						4						4					
	C_D [pF]	27						27						27					
Motor output	Active level	–						LOW						LOW					
	Needle period t_{CY} [s]	0.0625 (8Hz sweep)						1						10					
	Pulsewidth t_{PW} [ms]	62.5 (50% duty)						23.4						13.7					
AI input	Active level	HIGH (pull-down)						HIGH (pull-down)						HIGH (pull-down)					
	Bounce delay [ms]	62.5						62.5						62.5					
SN input	Active level	HIGH (pull-down)						HIGH (pull-down)						HIGH (pull-down)					
	Snooze time t_{SNZ} [s]	300						300						300					
	Bounce delay [ms]	62.5						62.5						62.5					
Alarm output	SEL pin	LOW			HIGH			LOW			HIGH			LOW			HIGH		
	Application	Simple alarm			Simple alarm			Step tone alarm			Simple alarm			Simple alarm			Simple alarm		
		AO1, AO3: tone AO2: motor bell			AO1, AO3: tone AO2: Magnet speaker			AO1, AO2: motor bell			AO1, AO2: motor bell			AO1, AO3: tone			AO1, AO3: tone		
	Pin	AO1	AO2	AO3	AO1	AO2	AO3	AO1	AO2	AO3	AO1	AO2	AO3	AO1	AO2	AO3	AO1	AO2	AO3
	Active level	H	H	L	64Hz clock output	H	32Hz clock output	H	L	32kHz F output	H	L	32kHz F output	H	H	L	See special timing in functional description.	H	See special timing in functional description.
	Frequency f_{PW} [kHz]	4	DC	4		2		–	–		DC	DC		4	–	4		–	
	Modulation f_{CY} [Hz] Step 1	8	–	8		8		1+2+4+8	1+2+4+8		–	–		1+16	1+16	1+16		–	
	Modulation f_{CY} [Hz] Step 2	–	–	–		–		1+2+8	1+2+8		–	–		–	–	–		–	
	Modulation f_{CY} [Hz] Step 3	–	–	–		–		1+8	1+8		–	–		–	–	–		–	
	Modulation f_{CY} [Hz] Step 4	–	–	–		–		DC	DC		–	–		–	–	–		–	
	Duty [%] Step 1	50	–	50		50		50	50		–	–		50	–	50		–	
	Duty [%] Step 2	–	–	–		–		50	50		–	–		–	–	–		–	
	Duty [%] Step 3	–	–	–		–		50	50		–	–		–	–	–		–	
	Duty [%] Step 4	–	–	–		–		–	–		–	–		–	–	–		–	
	Step time [s] Step 1	–	–	–		–		0–8	0–8		–	–		–	–	–		–	
	Step time [s] Step 2	–	–	–		–		8–16	8–16		–	–		–	–	–		–	
	Step time [s] Step 3	–	–	–		–		16–24	16–24		–	–		–	–	–		–	
	Step time [s] Step 4	–	–	–		–		24–	24–		–	–		–	–	–		–	
	Auto-stop [s]	None						None						None					
	I_{OH} [mA] min.	–0.9	–0.9	–0.9	–0.9	–0.9	–0.9	–0.9	–0.01	–0.01	–0.9	–0.01	–0.01	–0.9	–0.9	–0.9	–0.9	–0.9	–0.9
	I_{OL} [mA] min.	0.9	0.01	0.9	0.9	0.01	0.9	0.01	0.9	0.01	0.01	0.9	0.01	0.9	0.01	0.9	0.9	0.01	0.9

1. C_G and C_D built-in parasitic capacitance (C_G = C_D = 4pF)

		CF5761LB						CF5761MB						CF5761NB					
Built-in capacitance[1]	C_G [pF]	4						4						4					
	C_D [pF]	34						34						34					
Motor output	Active level	LOW						–						LOW					
	Needle period t_{CY} [s]	1						0.0625 (8Hz sweep)						1					
	Pulsewidth t_{PW} [ms]	31.3						62.5 (50% duty)						23.4					
AI input	Active level	LOW (pull-up)						LOW (pull-up)						LOW (pull-up)					
	Bounce delay [ms]	62.5						62.5						62.5					
SN input	Active level	LOW (pull-up)						LOW (pull-up)						LOW (pull-up)					
	Snooze time t_{SNZ} [s]	300						300						300					
	Bounce delay [ms]	62.5						62.5						62.5					
Alarm output	SEL pin	LOW			HIGH			LOW			HIGH			LOW			HIGH		
	Application	Step volume alarm			Simple alarm			Step volume alarm			Simple alarm			Step volume alarm			Step volume alarm		
		AO1, AO2: tone			AO1, AO2: motor bell			AO1, AO2: tone			AO1, AO2: motor bell			AO1, AO2: tone			AO1, AO2: tone		
	Pin	AO1	AO2	AO3	AO1	AO2	AO3	AO1	AO2	AO3	AO1	AO2	AO3	AO1	AO2	AO3	AO1	AO2	AO3
	Active level	H	L	Not used	H	H	Not used	H	L	Not used	H	H	Not used	H	L	Not used	H	L	Not used
	Frequency f_{PW} [kHz]	2	2		DC	DC		2	2		DC	DC		4	4		2	2	
	Modulation f_{CY} [Hz] Step 1	1+8	1+8		–	–		1+8	1+8		–	–		1+8	1+8		1+8	1+8	
	Modulation f_{CY} [Hz] Step 2	1+8	1+8		–	–		1+8	1+8		–	–		1+8	1+8		1+8	1+8	
	Modulation f_{CY} [Hz] Step 3	1+8	1+8		–	–		1+8	1+8		–	–		1+8	1+8		1+8	1+8	
	Modulation f_{CY} [Hz] Step 4	–	–		–	–		1+8	1+8		–	–		–	–		–	–	
	Duty [%] Step 1	6.25	6.25		–	–		6.25	6.25		–	–		6.25	6.25		12.5	12.5	
	Duty [%] Step 2	12.5	12.5		–	–		12.5	12.5		–	–		12.5	12.5		25	25	
	Duty [%] Step 3	50	50		–	–		25	25		–	–		50	50		50	50	
	Duty [%] Step 4	–	–		–	–		50	50		–	–		–	–		–	–	
	Step time [s] Step 1	0–8	0–8		–	–		0–4	0–4		–	–		0–8	0–8		0–8	0–8	
	Step time [s] Step 2	8–16	8–16		–	–		4–8	4–8		–	–		8–16	8–16		8–16	8–16	
	Step time [s] Step 3	16–	16–		–	–		8–12	8–12		–	–		16–	16–		16–	16–	
	Step time [s] Step 4	–	–		–	–		12–	12–		–	–		–	–		–	–	
	Auto-stop [s]	300						300						300					
	I_{OH} [mA] min.	–0.9	–0.9	–0.9	–0.9	–0.9	–0.9	–0.9	–0.9	–0.9	–0.9	–0.9	–0.9	–0.9	–0.9	–0.9	–0.9	–0.9	–0.9
	I_{OL} [mA] min.	0.9	0.9	0.9	0.9	0.9	0.9	0.9	0.9	0.9	0.9	0.9	0.9	0.9	0.9	0.9	0.9	0.9	0.9

1. C_G and C_D built-in parasitic capacitance (C_G = C_D = 4pF)

BLOCK DIAGRAM

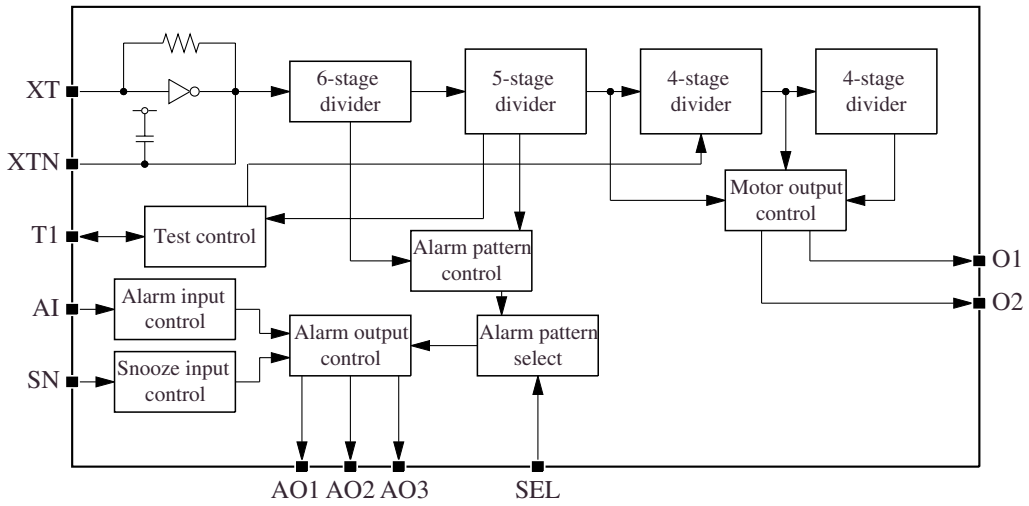

PAD DESCRIPTION and DIMENSIONS

Number	Name	I/O	Function	Pad dimensions	
				X [µm]	Y [µm]
1	O1	O	Movement motor drive output 1 (CMOS output)	155	1215
2	O2	O	Movement motor drive output 2 (CMOS output)	155	1023
3	VSS	–	Ground	155	835
4	AO2	O	Alarm output 2	155	567
5	AO1	O	Alarm output 1	155	155
6	AO3	O	Alarm output 3	351	155
7	SEL	I	Alarm function select. Pull-down resistor built-in	583	155
8	XTN	O	Crystal oscillator output. Oscillator capacitance C_D built-in	1255	166
9	XT	I	Crystal oscillator input. Crystal connected between XT and XTN	1255	399
10	SN	I	Snooze input Pull-down resistor built-in (CF5761CA, EA, HA) Pull-up resistor built-in (CF5761LB, MB, NB)	1255	587
11	AI	I	Alarm input Pull-down resistor built-in (CF5761CA, EA, HA) Pull-up resistor built-in (CF5761LB, MB, NB)	1255	821
12	T1	I/O	Test pin	1217	1215
13	VDD	–	Supply	1029	1215

SPECIFICATIONS

Absolute Maximum Ratings

Parameter	Symbol	Condition	Rating	Unit
Supply voltage range	$V_{DD} - V_{SS}$		–0.3 to 5.0	V
Input voltage range	V_{IN}		V_{SS} to V_{DD}	V
Operating temperature range	T_{opr}		–30 to 80	°C
Storage temperature range	T_{stg}		–65 to 150	°C

Electrical Characteristics

1.5V operation

Ta = 25°C, V_{SS} = 0V, V_{DD} = 1.5V, X'tal (f_0 = 32.768kHz, C_I = 35kΩ max, C_G = 20pF) unless otherwise noted

Parameter	Symbol	Condition	Rating			Unit
			min	typ	max	
Operating voltage	V_{DD}		1.2	1.5	3.6	V
Oscillator startup time[1]	t_1	V_{DD} = 1.2V	–	–	5.0	s
Frequency voltage characteristic	Δf/f		–	–	1.0	ppm/0.1V
Current consumption[1]	I_{DD}	No output load	–	0.5	1.0	μA
		No output load, F output	–	0.9	1.8	
O1, O2 motor output current[2]	I_{OUT}	V_{DD} = 1.2V, R_L = 400Ω	2.40	2.55	–	mA
AI HIGH-level input current	I_{IH1}	V_{DD} = 1.5V, V_{IH} = 1.5V	0.6	3	7.5	μA
AI LOW-level input current	I_{IL1}	V_{DD} = 1.5V, V_{IL} = 0V	0.6	3	7.5	μA
SN, SEL HIGH-level input current	I_{IH2}	V_{DD} = 1.5V, V_{IH} = 1.5V	0.2	1	2	μA
	I_{IH3}	V_{DD} = 1.5V, V_{IH} = 0.5V	9	18	36	
SN LOW-level input current	I_{IL2}	V_{DD} = 1.5V, V_{IL} = 0V	0.2	1	2	μA
	I_{IL3}	V_{DD} = 1.5V, V_{IL} = 1.0V	9	18	36	
AO1, AO2, AO3 LOW-level output current[3]	I_{OL1}	V_{DD} = 1.5V, V_{OL} = 0.75V	900	2000	–	μA
	I_{OL2}	V_{DD} = 1.5V, V_{OL} = 0.75V	10	30	100	
AO1, AO2, AO3 HIGH-level output current[3]	I_{OH1}	V_{DD} = 1.5V, V_{OH} = 0.75V	900	2000	–	μA
	I_{OH2}	V_{DD} = 1.5V, V_{OH} = 0.75V	10	30	100	
T1 LOW-level output current	I_{OLT}	V_{DD} = 1.5V, V_{OL} = 1.5V	5	10	20	μA
T1 HIGH-level output current	I_{OHT}	V_{DD} = 1.5V, V_{OH} = 0V	5	10	20	μA
F output voltage[4]	V_F	V_{DD} = 1.2V, output capacitance C_L = 50pF	0.4	–	–	V
Built-in capacitance	C_D		See series lineup			pF

1. Measured using standard circuits.
2. R_L is the resistance of the motor coil connected between O1 and O2.
3. The rating varies depending on the device selected. Please refer to the series lineup table for details.
4. F output voltage is the difference voltage, with load capacitor C_L connected between F and VSS pins, between $0.5V_{DD}$ and the peak voltage.

3.0V operation

Ta = 25°C, V_{SS} = 0V, V_{DD} = 3.0V, X'tal (f_0 = 32.768kHz, C_I = 35kΩ max, C_G = 20pF) unless otherwise noted

Parameter	Symbol	Condition	Rating			Unit
			min	typ	max	
Operating voltage	V_{DD}		1.2	3.0	3.6	V
Oscillator startup time[1]	t_1	V_{DD} = 2.4V	–	–	5.0	s
Frequency voltage characteristic	Δf/f		–	–	1.0	ppm/0.1V
Current consumption[1]	I_{DD}	No output load	–	0.6	1.2	μA
		No output load, F output	–	1.3	2.6	
O1, O2 motor output current[2]	I_{OUT}	V_{DD} = 2.4V, R_L = 1kΩ	2.26	–	–	mA
AI HIGH-level input current	I_{IH1}	V_{DD} = 3.0V, V_{IH} = 3.0V	0.6	3	7.5	μA
AI LOW-level input current	I_{IL1}	V_{DD} = 3.0V, V_{IL} = 0V	0.6	3	7.5	μA
SN, SEL HIGH-level input current	I_{IH2}	V_{DD} = 3.0V, V_{IH} = 3.0V	0.2	1	2	μA
	I_{IH3}	V_{DD} = 3.0V, V_{IH} = 0.5V	25	50	100	
SN LOW-level input current	I_{IL2}	V_{DD} = 3.0V, V_{IL} = 0V	0.2	1	2	μA
	I_{IL3}	V_{DD} = 3.0V, V_{IL} = 2.5V	25	50	100	
AO1, AO2, AO3 LOW-level output current[3]	I_{OL1}	V_{DD} = 3.0V, V_{OL} = 1.5V	900	–	–	μA
	I_{OL2}	V_{DD} = 3.0V, V_{OL} = 1.5V	10	–	–	
AO1, AO2, AO3 HIGH-level output current[3]	I_{OH1}	V_{DD} = 3.0V, V_{OH} = 1.5V	900	–	–	μA
	I_{OH2}	V_{DD} = 3.0V, V_{OH} = 1.5V	10	–	–	
T1 LOW-level output current	I_{OLT}	V_{DD} = 3.0V, V_{OL} = 3.0V	–	20	–	μA
T1 HIGH-level output current	I_{OHT}	V_{DD} = 3.0V, V_{OH} = 0V	–	20	–	μA
F output voltage[4]	V_F	V_{DD} = 2.4V, output capacitance C_L = 50pF	0.8	–	–	V
Built-in capacitance	C_D		See series lineup			pF

1. Measured using standard circuits.
2. R_L is the resistance of the motor coil connected between O1 and O2.
3. The rating varies depending on the device selected. Please refer to the series lineup table for details.
4. F output voltage is the difference voltage, with load capacitor C_L connected between F and VSS pins, between $0.5V_{DD}$ and the peak voltage.

Measurement Circuit

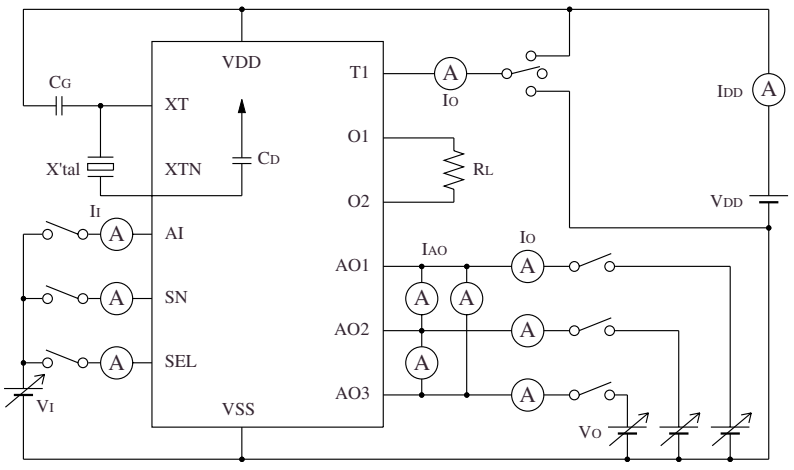

X'tal f_0 = 32.768kHz, C_I = 35kΩ max, C_L = 12.5pF, C_0 = 1.3pF, C_1 = 2.6pF, C_G = 20pF, R_L = 400Ω or 1kΩ

FUNCTIONAL DESCRIPTION

Motor Output

The CF5761 series comprise devices with different step movement and sweep movement cycles and pulse-widths.

Parameter	CF5761CA	CF5761EA	CF5761HA	CF5761LB	CF5761MB	CF5761NB
Active level	–	LOW	LOW	LOW	–	LOW
Movement cycle t_{CY} [s]	0.0625	1	10	1	0.0625	1
Pulsewidth t_{PW} [ms]	62.5	23.4	13.7	31.3	62.5	23.4
Movement	Sweep	Step	Step	Step	Sweep	Step

Step movement

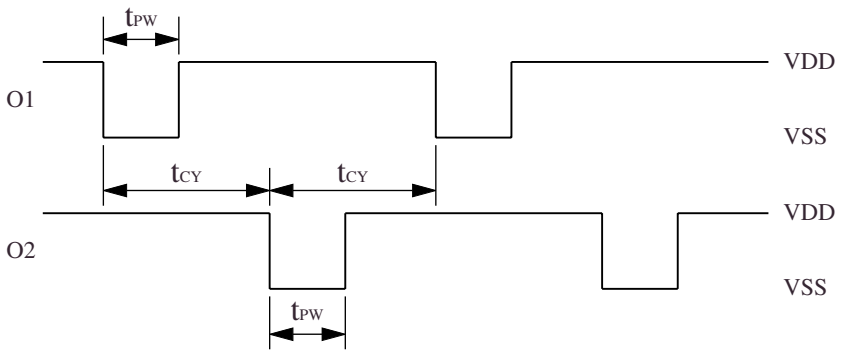

Sweep movement

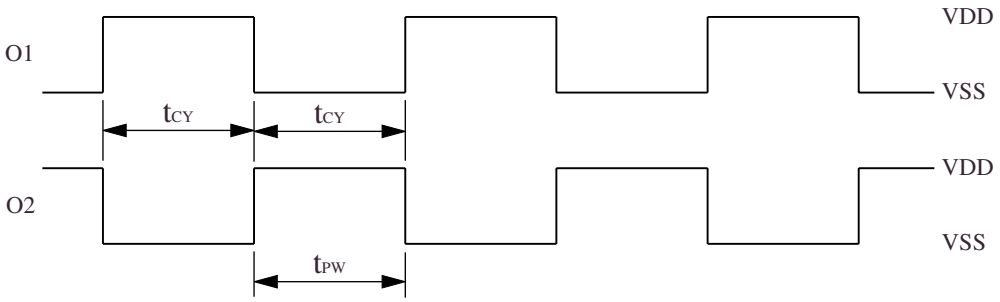

Alarm Control

The alarm is controlled using AI, SN, and SEL inputs. These pins have built-in chattering elimination circuits to prevent incorrect operation due to input chatter. The alarm output timing in response to these inputs is shown in the following figure.

Input	Function	Input chatter elimination
AI	Alarm control input. When AI is active, the specified alarm pattern is output on AO1, AO2 and AO3.	t_{ON} < 62.5ms, the input is not accepted. t_{ON} > 125ms, the input is accepted. 62.5ms ≤ t_{ON} ≤ 125ms, the input state is undefined.
SN	Snooze function control input. When the snooze input is accepted, the snooze time count begins. The snooze time is 300s.	
SEL	Alarm function select input. Selects one of two alarm patterns. When SEL is switched (from HIGH to LOW, or LOW to HIGH), the snooze state and auto-stop function is released, and the alarm signal is output.	

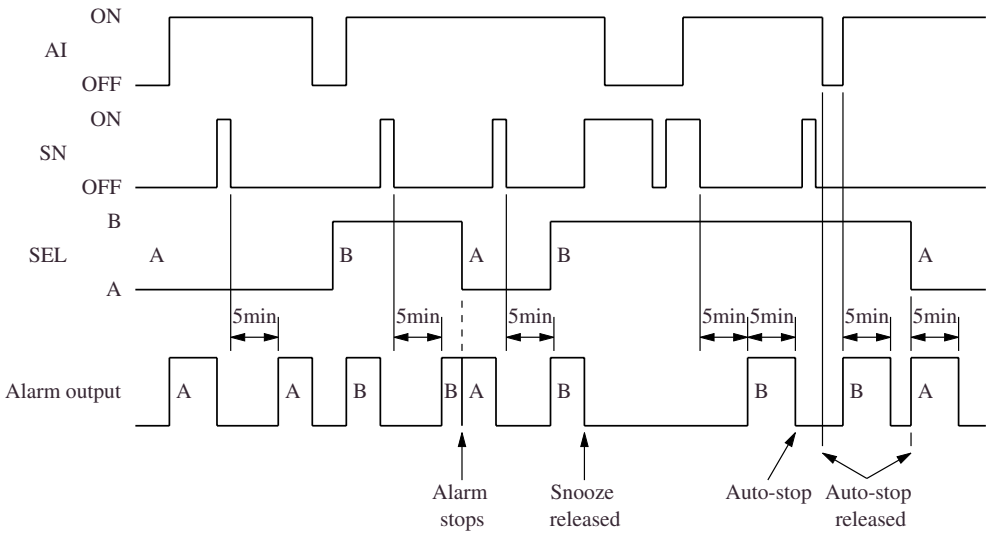

Alarm Modes

The CF5761 series provide several alarm modes and various alarm pattern outputs for a wide range of clock specifications, as described in the following table.

Alarm mode	Mode description	Output	Device
Simple alarm	A fixed alarm pattern is repeatedly rung (basic mode).	Motor bell Piezo-electric speaker Electromagnetic speaker	CF5761CA/EA/HA/LB/MB
Step tone modulated alarm	At fixed intervals, the alarm pattern changes, increasing the tone pitch with each step.	Motor bell	CF5761EA
Step volume modulated alarm	At fixed intervals, using a fixed alarm pattern, the output waveform duty changes, increasing the volume with each step.	Piezo-electric speaker Electromagnetic speaker	CF5761LB/MB/NB

The alarm pattern timing for each device in the CF5761 series is shown in the series lineup.

The CF5761HA has a special modulated alarm pattern when SEL is HIGH, as shown in the following figure. Outputs AO1 and AO3 have a frequency modulated alarm waveform output at the alarm fundamental frequency of 4kHz (4096Hz). The modulation pattern is output on AO2.

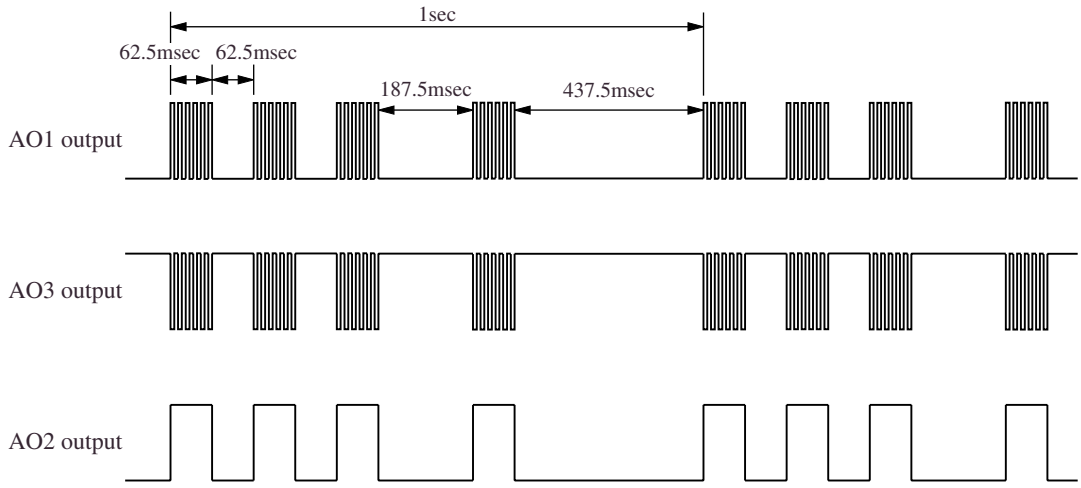

Power-ON Initialization

The CF5761 series are reset to the following conditions after power is applied.

- AI, SN, SEL input state
  These inputs are reset to LOW, except where the device has an active-LOW input in which case it is reset to HIGH. See the series lineup table.
- O1, O2
  In step movement devices, both outputs are HIGH and subsequent output occurs on O1. In sweep movement devices, O1 is reset LOW and O2 is reset HIGH, and output starts immediately.
- AO1, AO2, AO3
  No output after reset. However, F output (CF5761EA: 32kHz on AO3) and clock output start immediately.
- Test mode
  Test mode is released after reset. Note that after the oscillator starts, the input state of each pin is read and operation commences accordingly.

Test Function

The CF5761 series have a test mode of operation where the output cycles are compressed. T1 has a built-in chattering elimination circuit to prevent incorrect operation due to input chatter. When T1 goes HIGH for an interval of 31.25ms or greater, test mode is invoked. When T1 becomes open circuit, normal mode operation resumes immediately and a 256Hz signal is output on T1.

T1	Function
HIGH	Motor outputs: In step movement devices, the output runs 16 times faster with normal pulsewidth. In sweep movement devices, the output runs 16 times faster with 50% duty pulsewidth. Alarm outputs: Alarm operates at the same frequency with modulation frequency 16 times faster and step output changes 8 times faster (CF5761EA, LB, NB) or 4 times faster (CF5761MB). Snooze time, auto-stop time[1]: 281.25ms (CF5761EA, LB, NB) or 562.5ms (CF5761MB) in step output alarm mode, and 140.625ms in other modes.
Open circuit	256Hz output (normal operation)

1. The auto-stop time applies only to CF5761 versions that support the auto-stop function. See the series lineup table.

TYPICAL APPLICATION CIRCUITS

Piezo-electric speaker

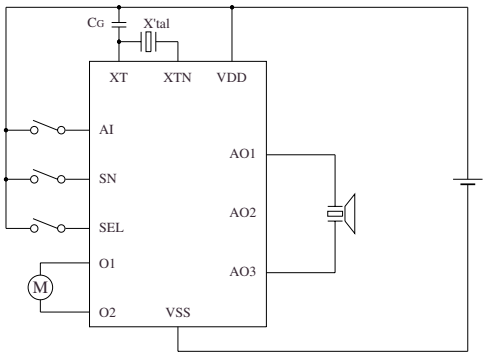

Electromagnetic speaker

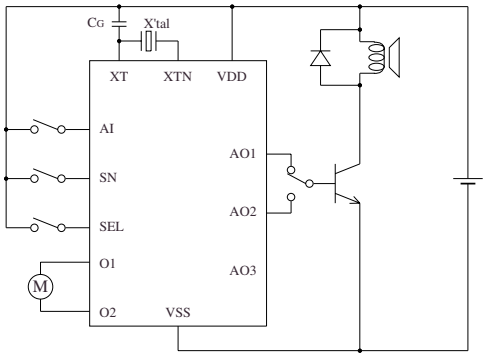

Motor bell

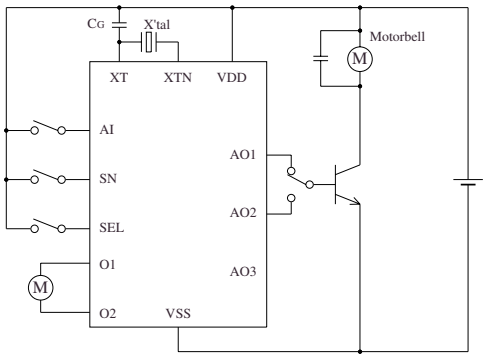

Melody alarm

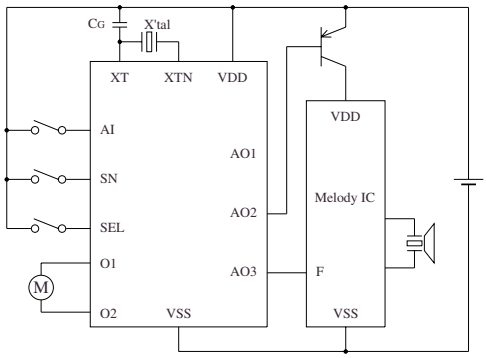

Please pay your attention to the following points at time of using the products shown in this document.

The products shown in this document (hereinafter “Products”) are not intended to be used for the apparatus that exerts harmful influence on human lives due to the defects, failure or malfunction of the Products. Customers are requested to obtain prior written agreement for such use from SEIKO NPC CORPORATION (hereinafter “NPC”). Customers shall be solely responsible for, and indemnify and hold NPC free and harmless from, any and all claims, damages, losses, expenses or lawsuits, due to such use without such agreement. NPC reserves the right to change the specifications of the Products in order to improve the characteristic or reliability thereof. NPC makes no claim or warranty that the contents described in this document dose not infringe any intellectual property right or other similar right owned by third parties. Therefore, NPC shall not be responsible for such problems, even if the use is in accordance with the descriptions provided in this document. Any descriptions including applications, circuits, and the parameters of the Products in this document are for reference to use the Products, and shall not be guaranteed free from defect, inapplicability to the design for the mass-production products without further testing or modification. Customers are requested not to export or re-export, directly or indirectly, the Products to any country or any entity not in compliance with or in violation of the national export administration laws, treaties, orders and regulations. Customers are requested appropriately take steps to obtain required permissions or approvals from appropriate government agencies.

SEIKO NPC CORPORATION

15-6, Nihombashi-kabutocho, Chuo-ku,
Tokyo 103-0026, Japan
Telephone: +81-3-6667-6601
Facsimile: +81-3-6667-6611
http://www.npc.co.jp/
Email: sales@npc.co.jp

NC0016BE 2006.04