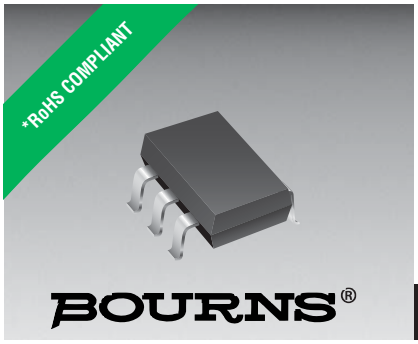

Features

- Lead free as standard
- RoHS compliant*
- Low capacitance - 1.3 pF
- ESD protection >25 kV
- Surge protection

Applications

- Personal Digital Assistants (PDAs)
- Notebook and PC computers
- Memory card protection
- SIM card port protection
- Portable electronics

CDSC706-0504C - Surface Mount TVS Diode Array

General Information

The CDSC706-0504C device provides ESD, EFT and Surge protection for high speed data ports meeting IEC 61000-4-2 (ESD), IEC 61000-4-4 (EFT) and IEC 61000-4-5 (Surge) requirements. The Transient Voltage Suppressor array, protecting up to 4 data lines, offers a Working Peak Reverse Voltage of 5 V and Minimum Breakdown Voltage of 6 V.

The SC70-6L packaged device will mount directly onto the industry standard SC70-6 footprint. Bourns® Chip Diodes conform to JEDEC standards, are easy to handle with standard pick and place equipment and the flat configuration minimizes roll away.

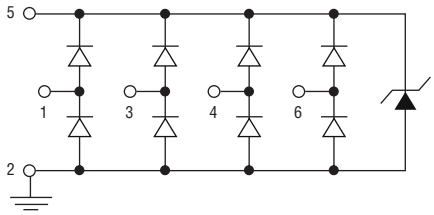

Thermal Characteristics (@ T_A = 25 °C Unless Otherwise Noted)

Parameter	Symbol	CDSC706-0504C	Unit
Peak Pulse Power (t_P = 8/20 µs)	I_{PP}	6.5	A
Storage Temperature	T_{STG}	-55 to +150	°C
Operating Temperature	T_{OPR}	-55 to +85	°C
Operating Supply Voltage	VDC	6	V
ESD per IEC61000-4-2 (Air) (I/O Pins) ESD per IEC61000-4-2 (Contact) (I/O Pins)	$V_{esd\ IO}$	18 14	kV
ESD per IEC61000-4-2 (Air) (V_{CC} to GND) ESD per IEC61000-4-2 (Contact) (V_{CC} to GND)	$V_{esd\ VCC}$	30 30	kV
DC Voltage at any I/O Pin	V_{IO}	(GND-0.5) to (VCC+0.5)	V

Electrical Characteristics (@ T_A = 25 °C Unless Otherwise Noted)

Parameter	Symbol	CDSC706-0504C	Unit
Maximum Reverse Standoff Voltage [1]	V_{RWM}	5.0	V
Maximum Leakage Current [1] @ V_{RWM}	I_L	5.0	µA
Maximum Channel Leakage Current @ V_{RWM}	I_{CD}	1.0	µA
Minimum Reverse Breakdown Voltage [1] @ I_{BV}=1 mA	V_{BR}	6.0	V
Maximum Forward Voltage [4] @ I_F = 15 mA	V_F	1.0	V
Maximum Clamping Voltage [2] @ 5 A 8/20us	V_C	9.0	V
Typical ESD Clamping Voltage- I/O [2]	$V_{clamp\ io}$	12.5	V
Maximum Channel Input Capacitance [2] @ V_{PIN5}=5 V, V_{PIN2}=0 V, V_{IN}=2.5 V, f=1 MHz	C_{IN}	1.6	pF
Max. Channel to Channel Input Capacitance [3] @ V_{PIN5}=5 V, V_{PIN2}=0 V, V_{IN}=2.5 V, f=1 MHz	C_{CROSS}	0.14	pF
Max. Variation of Channel Input Capacitance @ V_{PIN5}=5 V, V_{PIN2}=0 V, V_{IN}=2.5 V, f=1 MHz (I/O Pin to GND)	ΔC_{IN}	0.07	pF

Notes: 1: Pin 5 to Pin 2 (ground)
2: Pin 1, 3, 4 or 6 to Pin 2 (ground)
3: Between any two of pins 1, 3, 4, 6.
4: Pin 2 (ground) to Pin 5

*RoHS Directive 2002/95/EC Jan 27 2003 including Annex.
Specifications are subject to change without notice.
Customers should verify actual device performance in their specific applications

CDSC706-0504C - Surface Mount TVS Diode Array

BOURNS®

Product Dimensions

This is a molded JEDEC SC70-6L package with lead free 100 % Matte Sn on the lead frame. It weighs approximately 7 mg and has a flammability rating of UL 94V-0.

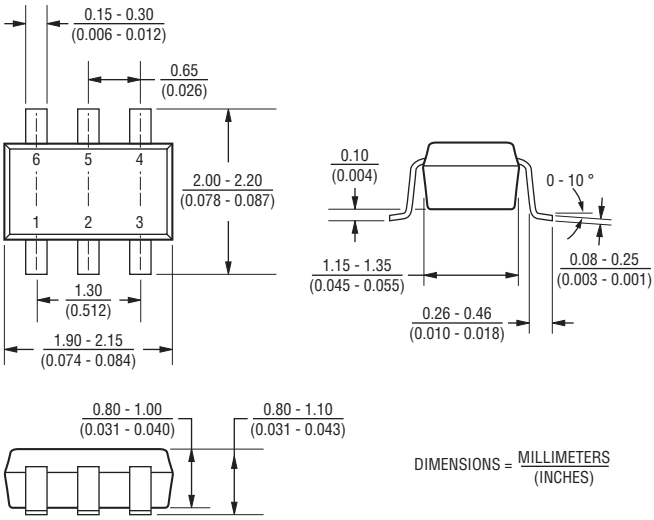

Configuration

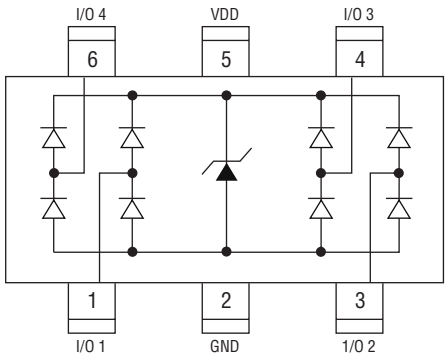

Recommended Footprint

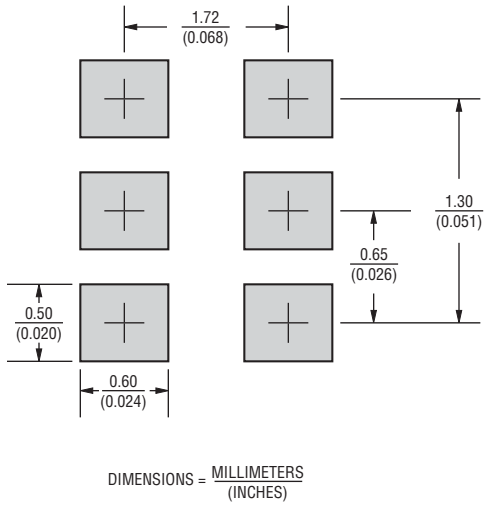

Typical Part Marking

CDSC706-0504C C05

How to Order

CD SC706 - 05 04 C

Common Diode
Chip Diode

Package
SC706 = SC70-6L Package

Working Peak Reverse Voltage
05 = 5 V_{RWM} (Volts)

Number of Lines
04 = 4 Data Lines

Suffix
C = Low Capacitance

Specifications are subject to change without notice.
Customers should verify actual device performance in their specific applications

Rating & Characteristic Curves

Clamping Voltage vs. Peak Pulse Current

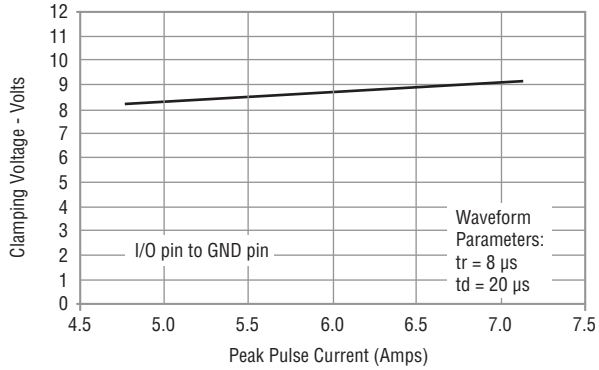

Pulse Waveform

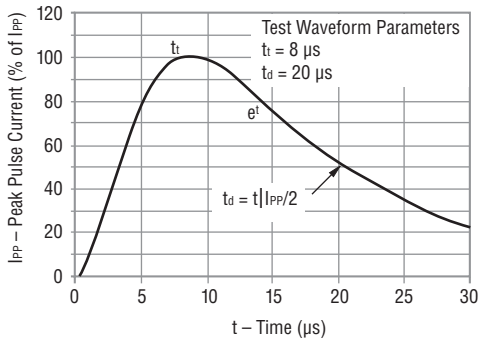

Overshoot and Clamping Voltage

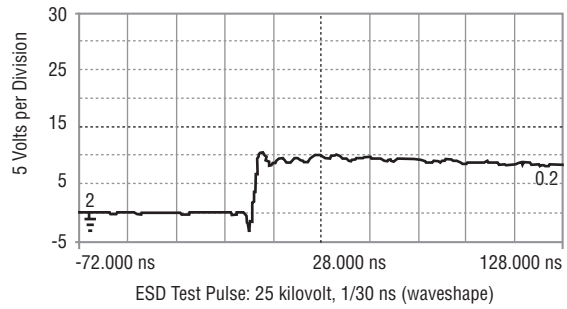

Power Derating Curve

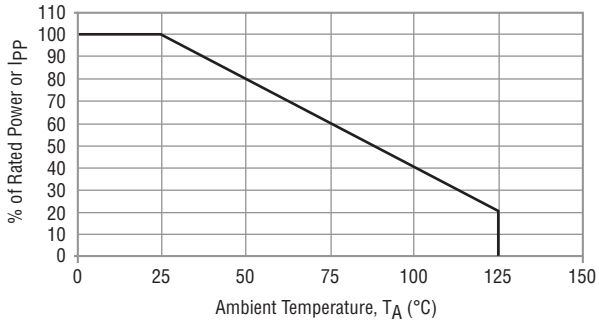

Forward Voltage vs. Forward Current

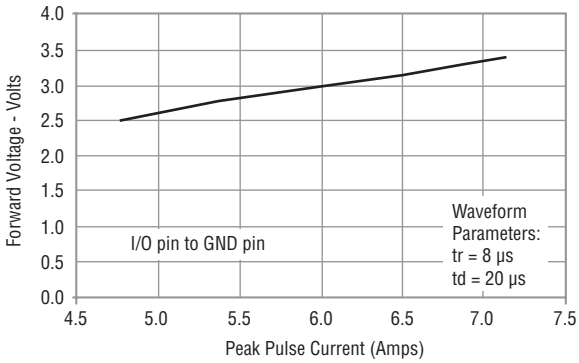

Typical Variation of C_{in} vs. V_{in}

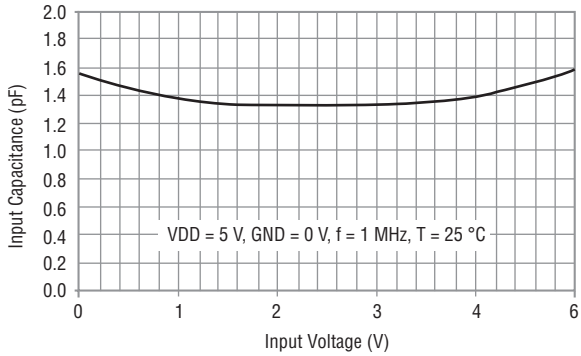

Specifications are subject to change without notice.
Customers should verify actual device performance in their specific applications

Packaging Information

The product is packaged in an 8 mm x 4 mm tape and reel format per EIA-481-A standard.

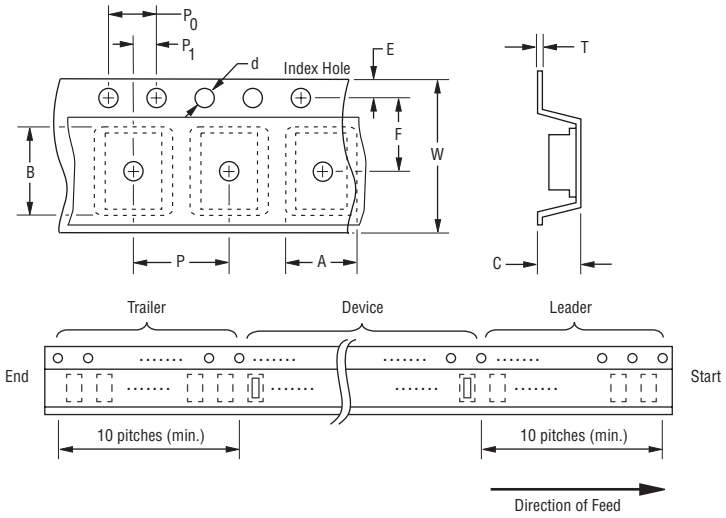

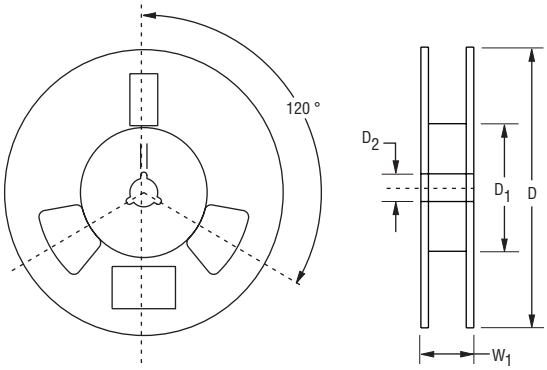

DIMENSIONS: MM / (INCHES)

Item	Symbol	SC70-6L
Carrier Width	A	2.25 ± 0.10 / (0.088 ± 0.004)
Carrier Length	B	2.34 ± 0.10 / (0.092 ± 0.004)
Carrier Depth	C	1.22 ± 0.10 / (0.048 ± 0.004)
Sprocket Hole	d	1.55 ± 0.05 / (0.061 ± 0.002)
Reel Outside Diameter	D	178 / (7.008)
Reel Inner Diameter	D_1	50.0 / (1.969) MIN.
Feed Hole Diameter	D_2	13.0 ± 0.20 / (0.512 ± 0.008)
Sprocket Hole Position	E	1.75 ± 0.10 / (0.069 ± 0.004)
Punch Hole Position	F	3.50 ± 0.05 / (0.138 ± 0.002)
Punch Hole Pitch	P	4.00 ± 0.10 / (0.157 ± 0.004)
Sprocket Hole Pitch	P_0	4.00 ± 0.10 / (0.157 ± 0.004)
Embossment Center	P_1	2.00 ± 0.05 / (0.079 ± 0.002)
Overall Tape Thickness	T	0.20 ± 0.10 / (0.008 ± 0.004)
Tape Width	W	8.00 ± 0.20 / (0.315 ± 0.008)
Reel Width	W_1	14.4 / (0.567) MAX.
Quantity per Reel	--	3000

Specifications are subject to change without notice.
Customers should verify actual device performance in their specific applications