2.5-V TO 3.3-V HIGH-PERFORMANCE CLOCK BUFFER

Check for Samples: CDCVF2310-EP

FEATURES

- **High-Performance 1:10 Clock Driver**
- **Operates up to 200 MHz at V_{DD} 3.3 V**
- **Pin-to-Pin Skew < 100 ps at V_{DD} 3.3 V**
- **V_{DD} Range: 2.3 V to 3.6 V**
- **Output Enable Glitch Suppression**
- **Distributes One Clock Input to Two Banks of Five Outputs**
- **25-Ω On-Chip Series Damping Resistors**
- **Packaged in 24-Pin TSSOP**

PW PACKAGE
(TOP VIEW)

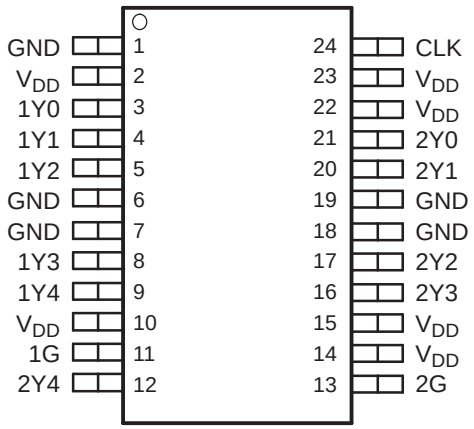

APPLICATIONS

- **General-Purpose Applications**

SUPPORTS DEFENSE, AEROSPACE, AND MEDICAL APPLICATIONS

- **Controlled Baseline**
- **One Assembly and Test Site**
- **One Fabrication Site**
- **Available in Military (–55°C to 125°C) Temperature Range** (1)
- **Extended Product Life Cycle**
- **Extended Product-Change Notification**
- **Product Traceability**

(1) Custom temperature ranges available

DESCRIPTION

The CDCVF2310 is a high-performance, low-skew clock buffer that operates up to 200 MHz. Two banks of five outputs each provide low-skew copies of CLK. After power up, the default state of the outputs is low regardless of the state of the control pins. For normal operation, the outputs of bank 1Y[0:4] or 2Y[0:4] can be placed in a low state when the control pins (1G or 2G, respectively) are held low and a negative clock edge is detected on the CLK input. The outputs of bank 1Y[0:4] or 2Y[0:4] can be switched into the buffer mode when the control pins (1G and 2G) are held high and a negative clock edge is detected on the CLK input. The device operates in a 2.5-V and 3.3-V environment. The built-in output enable glitch suppression ensures a synchronized output enable sequence to distribute full period clock signals.

The CDCVF2310 is characterized for operation from –55°C to 125°C.

Table 1. ORDERING INFORMATION(1)

T_J	PACKAGE	ORDERABLE PART NUMBER	TOP-SIDE MARKING	VID NUMBER
–55°C to 125°C	TSSOP - PW	CDCVF2310MPWREP	CKV2310EP	V62/13603-01XE
		CDCVF2310MPWEP	CKV2310EP	V62/13603-01XE-T

(1) For the most current package and ordering information, see the Package Option Addendum at the end of this document, or see the TI Web site at www.ti.com.

Please be aware that an important notice concerning availability, standard warranty, and use in critical applications of Texas Instruments semiconductor products and disclaimers thereto appears at the end of this data sheet.

PRODUCTION DATA information is current as of publication date. Products conform to specifications per the terms of the Texas Instruments standard warranty. Production processing does not necessarily include testing of all parameters.

Copyright © 2012, Texas Instruments Incorporated

This integrated circuit can be damaged by ESD. Texas Instruments recommends that all integrated circuits be handled with appropriate precautions. Failure to observe proper handling and installation procedures can cause damage.

ESD damage can range from subtle performance degradation to complete device failure. Precision integrated circuits may be more susceptible to damage because very small parametric changes could cause the device not to meet its published specifications.

FUNCTIONAL BLOCK DIAGRAM

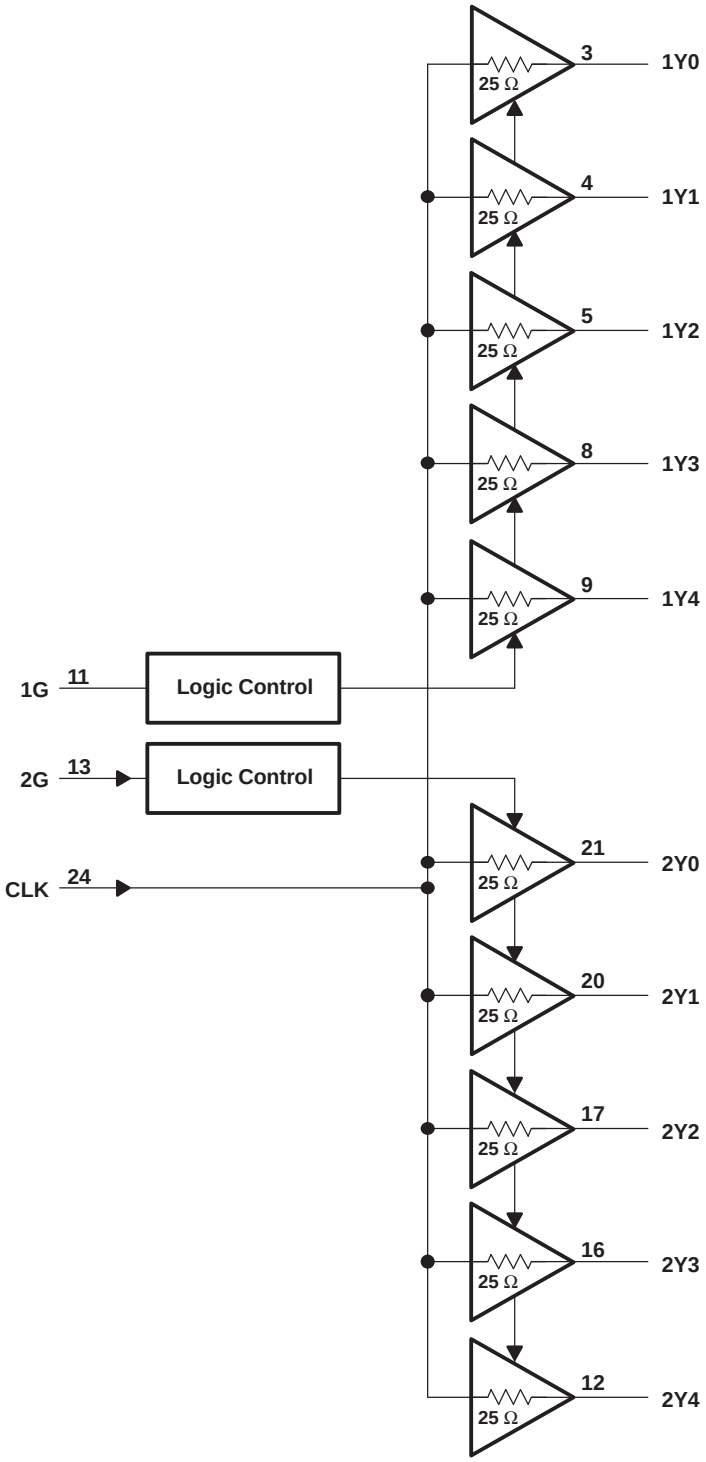

Copyright © 2012, Texas Instruments Incorporated

Table 2. FUNCTION TABLE

INPUT			OUTPUT	
1G	**2G**	**CLK**	**1Y[0:4]**	**2Y[0:4]**
L	L	↓	L	L
H	L	↓	CLK(1)	L
L	H	↓	L	CLK(1)
H	H	↓	CLK(1)	CLK(1)

(1) After detecting one negative edge on the CLK input, the output follows the input CLK if the control pin is held high.

Terminal Functions

TERMINAL		I/O	DESCRIPTION
NAME	**NO.**		
1G	11	I	Output enable control for 1Y[0:4] outputs. This output enable is active-high, meaning the 1Y[0:4] clock outputs follow the input clock (CLK) if this pin is logic high.
2G	13	I	Output enable control for 2Y[0:4] outputs. This output enable is active-high, meaning the 2Y[0:4] clock outputs follow the input clock (CLK) if this pin is logic high.
1Y[0:4]	3, 4, 5, 8, 9	O	Buffered output clocks
2Y[0:4]	21, 20, 17, 16, 12	O	Buffered output clocks
CLK	24	I	Input reference frequency
GND	1, 6, 7, 18, 19		Ground
V_{DD}	2, 10, 14, 15, 22, 23		DC power supply, 2.3 V – 3.6 V

ABSOLUTE MAXIMUM RATINGS

over operating junction temperature range (unless otherwise noted) (1)

Supply voltage range, V_{DD}	–0.5 V to 4.6 V
Input voltage range, V_I (2) (3)	–0.5 V to V_{DD} + 0.5 V
Output voltage range, V_O (2) (3)	–0.5 V to V_{DD} + 0.5 V
Input clamp current, I_{IK} (V_I < 0 or V_I> V_{DD})	±50 mA
Output clamp current, I_{OK} (V_O < 0 or V_O > V_{DD})	±50 mA
Continuous total output current, I_O (V_O = 0 to V_{DD})	±50 mA
Storage temperature range T_{stg}	–65°C to 150°C

(1) Stresses beyond those listed under “absolute maximum ratings” may cause permanent damage to the device. These are stress ratings only, and functional operation of the device at these or any other conditions beyond those indicated under “recommended operating conditions” is not implied. Exposure to absolute-maximum-rated conditions for extended periods may affect device reliability.
(2) The input and output negative voltage ratings may be exceeded if the input and output clamp-current ratings are observed.
(3) This value is limited to 4.6 V maximum.

Copyright © 2012, Texas Instruments Incorporated

THERMAL INFORMATION

THERMAL METRIC[1]		CDCVF2310 PW 24 PINS	UNITS
θ_{JA}	Junction-to-ambient thermal resistance[2]	91.7	°C/W
θ_{JCtop}	Junction-to-case (top) thermal resistance[3]	31.2	
θ_{JB}	Junction-to-board thermal resistance[4]	46.4	
ψ_{JT}	Junction-to-top characterization parameter[5]	1.5	
ψ_{JB}	Junction-to-board characterization parameter[6]	45.8	
θ_{JCbot}	Junction-to-case (bottom) thermal resistance[7]	N/A	

(1) For more information about traditional and new thermal metrics, see the *IC Package Thermal Metrics* application report, SPRA953.
(2) The junction-to-ambient thermal resistance under natural convection is obtained in a simulation on a JEDEC-standard, high-K board, as specified in JESD51-7, in an environment described in JESD51-2a.
(3) The junction-to-case (top) thermal resistance is obtained by simulating a cold plate test on the package top. No specific JEDEC-standard test exists, but a close description can be found in the ANSI SEMI standard G30-88.
(4) The junction-to-board thermal resistance is obtained by simulating in an environment with a ring cold plate fixture to control the PCB temperature, as described in JESD51-8.
(5) The junction-to-top characterization parameter, ψ_{JT}, estimates the junction temperature of a device in a real system and is extracted from the simulation data for obtaining θ_{JA}, using a procedure described in JESD51-2a (sections 6 and 7).
(6) The junction-to-board characterization parameter, ψ_{JB}, estimates the junction temperature of a device in a real system and is extracted from the simulation data for obtaining θ_{JA} , using a procedure described in JESD51-2a (sections 6 and 7).
(7) The junction-to-case (bottom) thermal resistance is obtained by simulating a cold plate test on the exposed (power) pad. No specific JEDEC standard test exists, but a close description can be found in the ANSI SEMI standard G30-88.

RECOMMENDED OPERATING CONDITIONS [1]

		MIN	NOM	MAX	UNIT
Supply voltage, V_{DD}		2.3	2.5		V
			3.3	3.6	
Low-level input voltage, V_{IL}	V_{DD} = 3 V to 3.6 V			0.8	V
	V_{DD} = 2.3 V to 2.7 V			0.7	
High-level input voltage, V_{IH}	V_{DD} = 3 V to 3.6 V	2			V
	V_{DD} = 2.3 V to 2.7 V	1.7			
Input voltage, V_I		0		V_{DD}	V
High-level output current, I_{OH}	V_{DD} = 3 V to 3.6 V			12	mA
	V_{DD} = 2.3 V to 2.7 V			6	
Low-level output current, I_{OL}	V_{DD} = 3 V to 3.6 V			12	mA
	V_{DD} = 2.3 V to 2.7 V			6	
Operating junction temperature, T_J		–55		125	°C

(1) Unused inputs must be held high or low to prevent them from floating.

Copyright © 2012, Texas Instruments Incorporated

ELECTRICAL CHARACTERISTICS

over recommended operating junction temperature range (unless otherwise noted)

PARAMETER		TEST CONDITIONS		MIN	TYP(1)	MAX	UNIT
V_{IK}	Input voltage	V_{DD} = 3 V,	I_I = –18 mA			–1.2	V
I_I	Input current	V_I = 0 V or V_{DD}				±5	µA
I_{DD} (2)	Static device current	CLK = 0 V or V_{DD},	I_O = 0 mA			100	µA
C_I	Input capacitance	V_{DD} = 2.3 V to 3.6 V,	V_I = 0 V or V_{DD}		2.5		pF
C_O	Output capacitance	V_{DD} = 2.3 V to 3.6 V,	V_I = 0 V or V_{DD}		2.8		pF
V_{DD} = 3.3 V ±0.3 V							
V_{OH}	High-level output voltage	V_{DD} = min to max,	I_{OH} = –100 µA	V_{DD} – 0.2			V
		V_{DD} = 3 V	I_{OH} = –12 mA	2.1			
			I_{OH} = –6 mA	2.4			
V_{OL}	Low-level output voltage	V_{DD} = min to max,	I_{OL} = –100 µA			0.2	V
		V_{DD} = 3 V	I_{OL} = 12 mA			0.8	
			I_{OL} = 6 mA			0.55	
I_{OH}	High-level output current	V_{DD} = 3 V,	V_O = 1 V	–28			mA
		V_{DD} = 3.3 V,	V_O = 1.65 V		–36		
		V_{DD} = 3.6 V,	V_O = 3.135 V			–14	
I_{OL}	Low-level output current	V_{DD} = 3 V,	V_O = 1.95 V	28			mA
		V_{DD} = 3.3 V,	V_O = 1.65 V		36		
		V_{DD} = 3.6 V,	V_O = 0.4 V			14	
V_{DD} = 2.5 V ±0.2 V							
V_{OH}	High-level output voltage	V_{DD} = min to max,	I_{OH} = –100 µA	V_{DD} – 0.2			V
		V_{DD} = 2.3 V	I_{OH} = –6 mA	1.8			
V_{OL}	Low-level output voltage	V_{DD} = min to max,	I_{OL} = 100 µA			0.2	V
		V_{DD} = 2.3 V	I_{OL} = 6 mA			0.55	
I_{OH}	High-level output current	V_{DD} = 2.3 V,	V_O = 1 V	–15			mA
		V_{DD} = 2.5 V,	V_O = 1.25 V		–25		
		V_{DD} = 2.7 V,	V_O = 2.375 V			–10	
I_{OL}	Low-level output current	V_{DD} = 2.3 V,	V_O = 1.2 V	15			mA
		V_{DD} = 2.5 V,	V_O = 1.25 V		25		
		V_{DD} = 2.7 V,	V_O = 0.3 V			10	

(1) All typical values are at respective nominal V_{DD}.
(2) For I_{CC} over frequency, see Figure 6.

Copyright © 2012, Texas Instruments Incorporated

TIMING REQUIREMENTS

over recommended ranges of supply voltage and operating junction temperature

			MIN	NOM	MAX	UNIT
f_{clk}	Clock frequency	V_{DD} = 3 V to 3.6 V	0		200	MHz
		V_{DD} = 2.3 V to 2.7 V	0		170	

JITTER CHARACTERISTICS

Characterized using CDCVF2310 Performance EVM when V_{DD}=3.3 V. Outputs not under test are terminated to 50 Ω.

PARAMETER		TEST CONDITIONS	MIN	TYP	MAX	UNIT
t_{jitter}	Additive phase jitter from input to output 1Y0	12 kHz to 5 MHz, f_{out} = 30.72 MHz		52		fs rms
		12 kHz to 20 MHz, f_{out} = 125 MHz		45		

SWITCHING CHARACTERISTICS

over recommended operating junction temperature range (unless otherwise noted)

PARAMETER		TEST CONDITIONS	MIN	TYP	MAX	UNIT
V_{DD} = 3.3 V ±0.3 V (see Figure 2)						
t_{PLH} / t_{PHL}	CLK to Yn	f = 0 MHz to 200 MHz For circuit load, see Figure 2.	1.3		3.3	ns
$t_{sk(o)}$	Output skew (Ym to Yn) (1) (see Figure 4)				100	ps
$t_{sk(p)}$	Pulse skew (see Figure 5)				570	ps
$t_{sk(pp)}$	Part-to-part skew				500	ps
t_r	Rise time (see Figure 3)	V_O = 0.4 V to 2 V	0.7		2.2	V/ns
t_f	Fall time (see Figure 3)	V_O = 2 V to 0.4 V	0.7		2.2	V/ns
$t_{su(en)}$	Enable setup time, G_high before CLK ↓		0.1			ns
$t_{su(dis)}$	Disable setup time, G_low before CLK ↓		0.1			ns
$t_{h(en)}$	Enable hold time, G_high after CLK ↓		0.4			ns
$t_{h(dis)}$	Disable hold time, G_low after CLK ↓		0.4			ns
V_{DD} = 2.5 V ±0.2 V (see Figure 2)						
t_{PLH} / t_{PHL}	CLK to Yn	f = 0 MHz to 170 MHz For circuit load, see Figure 2.	1.5		4	ns
$t_{sk(o)}$	Output skew (Ym to Yn) (1) (see Figure 4)				170	ps
$t_{sk(p)}$	Pulse skew (see Figure 5)				680	ps
$t_{sk(pp)}$	Part-to-part skew				600	ps
t_r	Rise time (see Figure 3)	V_O = 0.4 V to 1.7 V	0.5		1.4	V/ns
t_f	Fall time (see Figure 3)	V_O = 1.7 V to 0.4 V	0.5		1.4	V/ns
$t_{su(en)}$	Enable setup time, G_high before CLK ↓		0.1			ns
$t_{su(dis)}$	Disable setup time, G_low before CLK ↓		0.1			ns
$t_{h(en)}$	Enable hold time, G_high after CLK ↓		0.4			ns
$t_{h(dis)}$	Disable hold time, G_low after CLK ↓		0.4			ns

(1) The $t_{sk(o)}$ specification is only valid for equal loading of all outputs.

Copyright © 2012, Texas Instruments Incorporated

DETAILED DESCRIPTION

Output Enable Glitch Suppression Circuit

The purpose of the glitch suppression circuitry is to ensure the output enable sequence is synchronized with the clock input such that the output buffer is enabled or disabled on the next full period of the input clock (negative edge triggered by the input clock) (see Figure 1).

The G input must fulfill the timing requirements (t_{su}, t_h) according to the *Switching Characteristics* table for predictable operation.

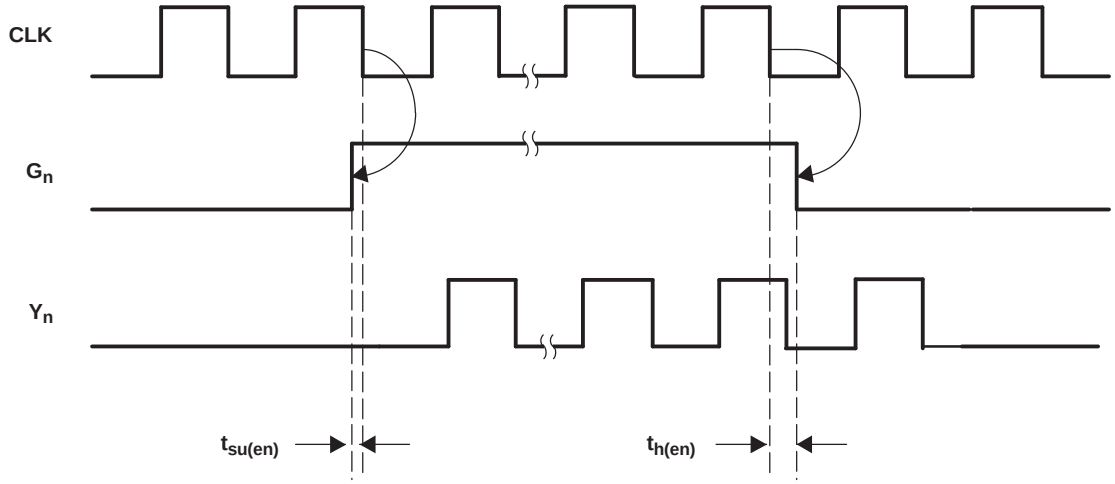

a) Enable Mode

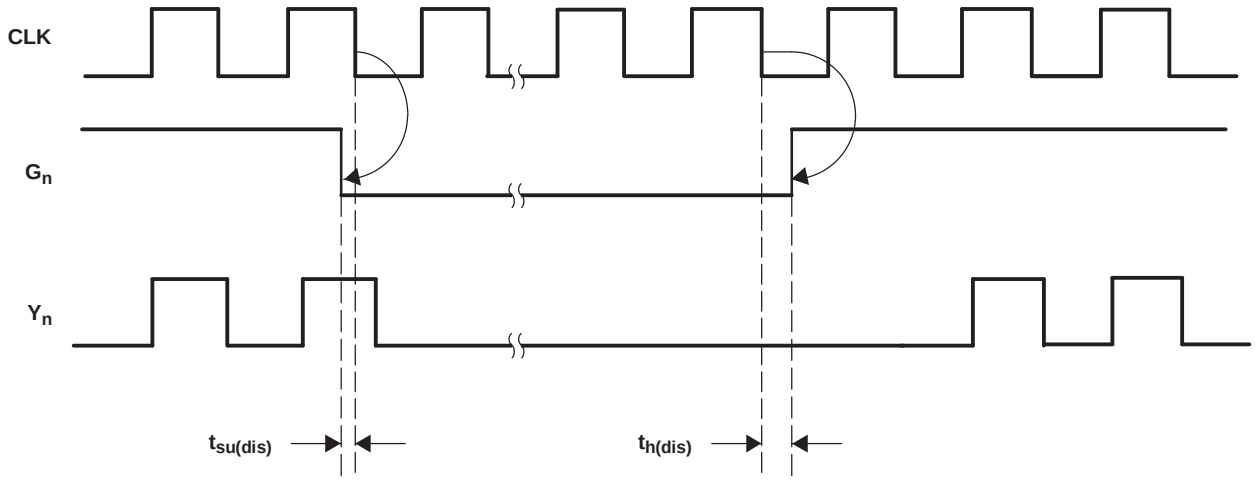

b) Disable Mode

Figure 1. Enable and Disable Mode Relative to CLK↓

PARAMETER MEASUREMENT INFORMATION

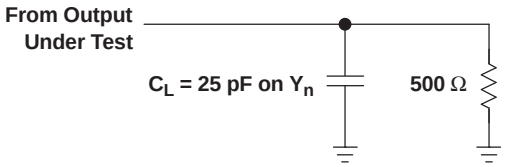

A. C_L includes probe and jig capacitance.

B. All input pulses are supplied by generators having the following characteristics: PRR ≤ 200 MHz, Z_O = 50 Ω, t_r < 1.2 ns, t_f < 1.2 ns.

Figure 2. Test Load Circuit

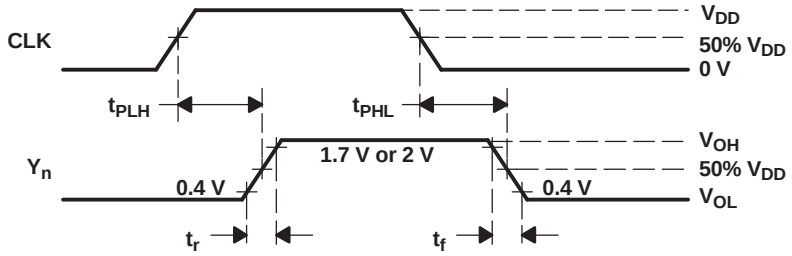

Figure 3. Voltage Waveforms Propagation Delay Times

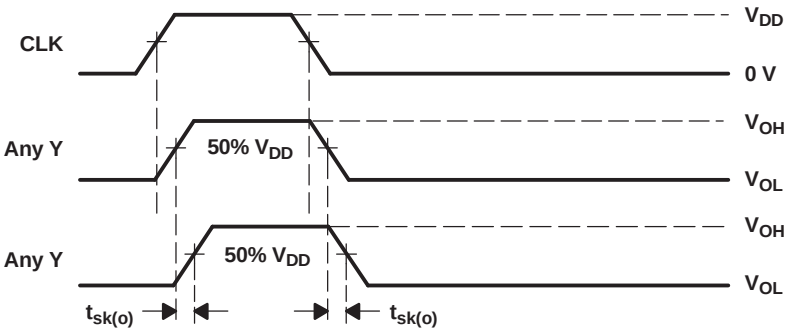

Figure 4. Output Skew

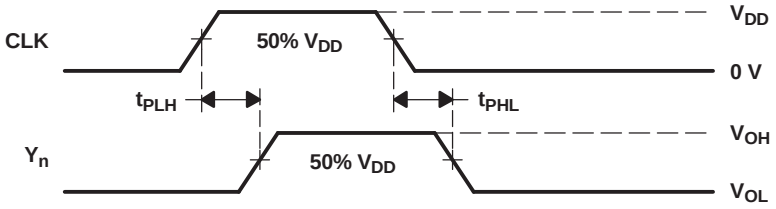

NOTE: $t_{sk(p)} = | t_{PLH} - t_{PHL} |$

Figure 5. Pulse Skew

Copyright © 2012, Texas Instruments Incorporated

PARAMETER MEASUREMENT INFORMATION (continued)

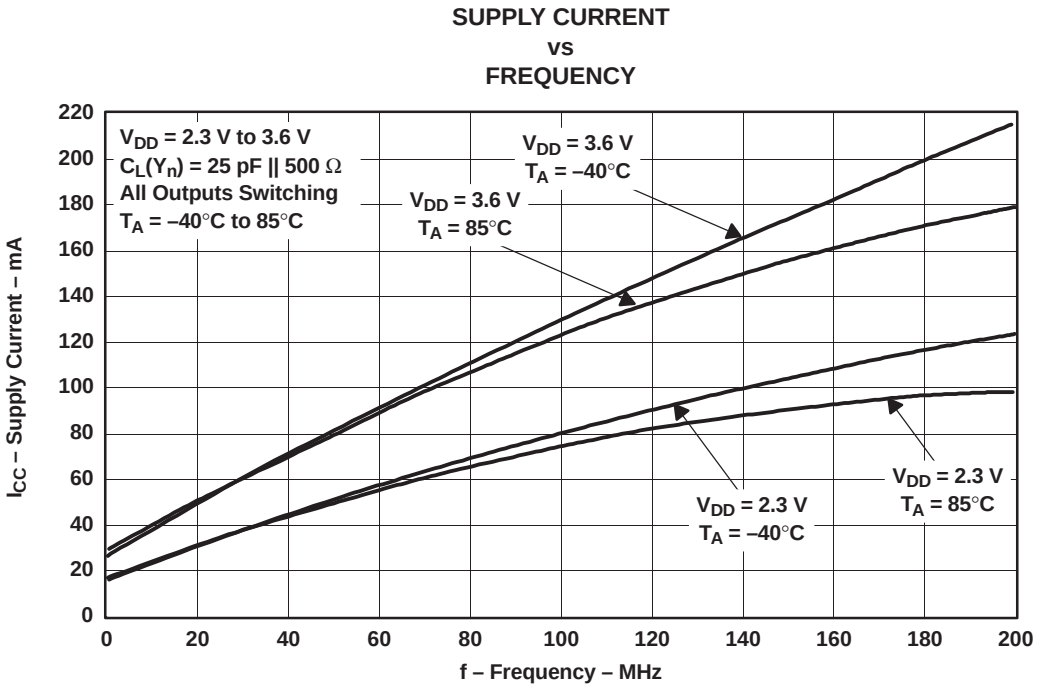

Figure 6.

PACKAGING INFORMATION

Orderable Device	Status (1)	Package Type	Package Drawing	Pins	Package Qty	Eco Plan (2)	Lead/Ball Finish (6)	MSL Peak Temp (3)	Op Temp (°C)	Device Marking (4/5)	Samples
CDCVF2310MPWEP	ACTIVE	TSSOP	PW	24	60	Green (RoHS & no Sb/Br)	NIPDAU	Level-1-260C-UNLIM	-55 to 125	CKV2310EP	Samples
CDCVF2310MPWREP	ACTIVE	TSSOP	PW	24	2000	Green (RoHS & no Sb/Br)	NIPDAU	Level-1-260C-UNLIM	-55 to 125	CKV2310EP	Samples
V62/13603-01XE	ACTIVE	TSSOP	PW	24	2000	Green (RoHS & no Sb/Br)	NIPDAU	Level-1-260C-UNLIM	-55 to 125	CKV2310EP	Samples
V62/13603-01XE-T	ACTIVE	TSSOP	PW	24	60	Green (RoHS & no Sb/Br)	NIPDAU	Level-1-260C-UNLIM	-55 to 125	CKV2310EP	Samples

(1) The marketing status values are defined as follows:
ACTIVE: Product device recommended for new designs.
LIFEBUY: TI has announced that the device will be discontinued, and a lifetime-buy period is in effect.
NRND: Not recommended for new designs. Device is in production to support existing customers, but TI does not recommend using this part in a new design.
PREVIEW: Device has been announced but is not in production. Samples may or may not be available.
OBSOLETE: TI has discontinued the production of the device.

(2) **RoHS:** TI defines "RoHS" to mean semiconductor products that are compliant with the current EU RoHS requirements for all 10 RoHS substances, including the requirement that RoHS substance do not exceed 0.1% by weight in homogeneous materials. Where designed to be soldered at high temperatures, "RoHS" products are suitable for use in specified lead-free processes. TI may reference these types of products as "Pb-Free".
RoHS Exempt: TI defines "RoHS Exempt" to mean products that contain lead but are compliant with EU RoHS pursuant to a specific EU RoHS exemption.
Green: TI defines "Green" to mean the content of Chlorine (Cl) and Bromine (Br) based flame retardants meet JS709B low halogen requirements of <=1000ppm threshold. Antimony trioxide based flame retardants must also meet the <=1000ppm threshold requirement.

(3) MSL, Peak Temp. - The Moisture Sensitivity Level rating according to the JEDEC industry standard classifications, and peak solder temperature.

(4) There may be additional marking, which relates to the logo, the lot trace code information, or the environmental category on the device.

(5) Multiple Device Markings will be inside parentheses. Only one Device Marking contained in parentheses and separated by a "~" will appear on a device. If a line is indented then it is a continuation of the previous line and the two combined represent the entire Device Marking for that device.

(6) Lead/Ball Finish - Orderable Devices may have multiple material finish options. Finish options are separated by a vertical ruled line. Lead/Ball Finish values may wrap to two lines if the finish value exceeds the maximum column width.

Important Information and Disclaimer: The information provided on this page represents TI's knowledge and belief as of the date that it is provided. TI bases its knowledge and belief on information provided by third parties, and makes no representation or warranty as to the accuracy of such information. Efforts are underway to better integrate information from third parties. TI has taken and

continues to take reasonable steps to provide representative and accurate information but may not have conducted destructive testing or chemical analysis on incoming materials and chemicals. TI and TI suppliers consider certain information to be proprietary, and thus CAS numbers and other limited information may not be available for release.

In no event shall TI's liability arising out of such information exceed the total purchase price of the TI part(s) at issue in this document sold by TI to Customer on an annual basis.

OTHER QUALIFIED VERSIONS OF CDCVF2310-EP :

- Catalog: CDCVF2310

NOTE: Qualified Version Definitions:

- Catalog - TI's standard catalog product

TAPE AND REEL INFORMATION

REEL DIMENSIONS

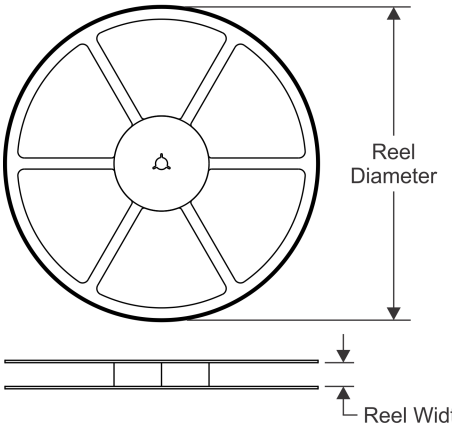

TAPE DIMENSIONS

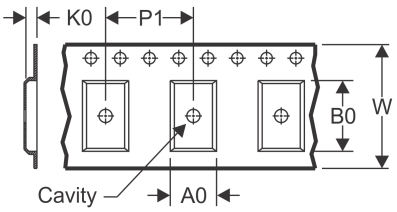

A0	Dimension designed to accommodate the component width
B0	Dimension designed to accommodate the component length
K0	Dimension designed to accommodate the component thickness
W	Overall width of the carrier tape
P1	Pitch between successive cavity centers

QUADRANT ASSIGNMENTS FOR PIN 1 ORIENTATION IN TAPE

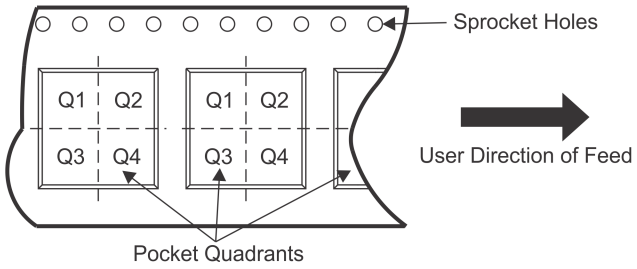

*All dimensions are nominal

Device	Package Type	Package Drawing	Pins	SPQ	Reel Diameter (mm)	Reel Width W1 (mm)	A0 (mm)	B0 (mm)	K0 (mm)	P1 (mm)	W (mm)	Pin1 Quadrant
CDCVF2310MPWREP	TSSOP	PW	24	2000	330.0	16.4	6.95	8.3	1.6	8.0	16.0	Q1

TAPE AND REEL BOX DIMENSIONS

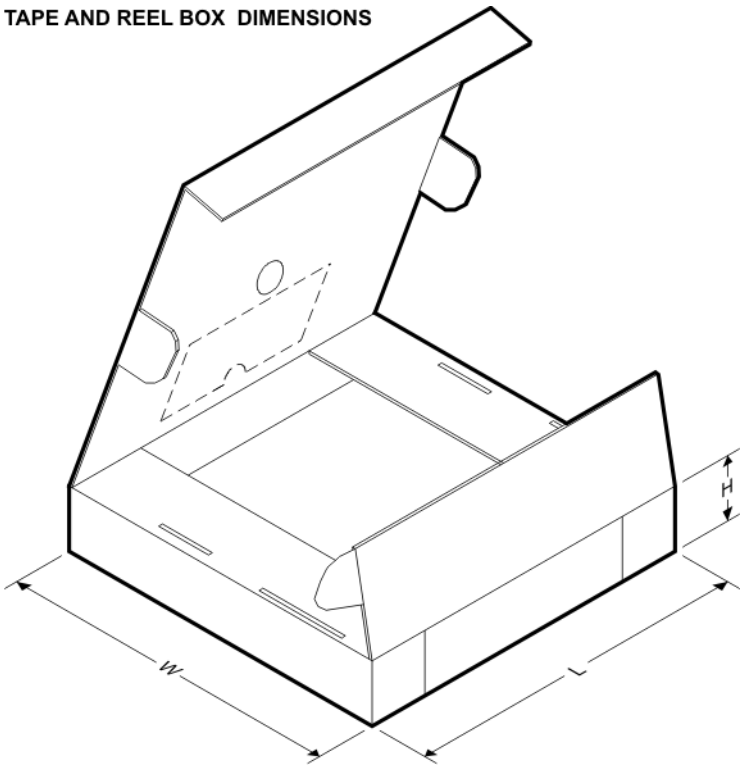

*All dimensions are nominal

Device	Package Type	Package Drawing	Pins	SPQ	Length (mm)	Width (mm)	Height (mm)
CDCVF2310MPWREP	TSSOP	PW	24	2000	367.0	367.0	38.0

PACKAGE OUTLINE

PW0024A

TSSOP - 1.2 mm max height

SMALL OUTLINE PACKAGE

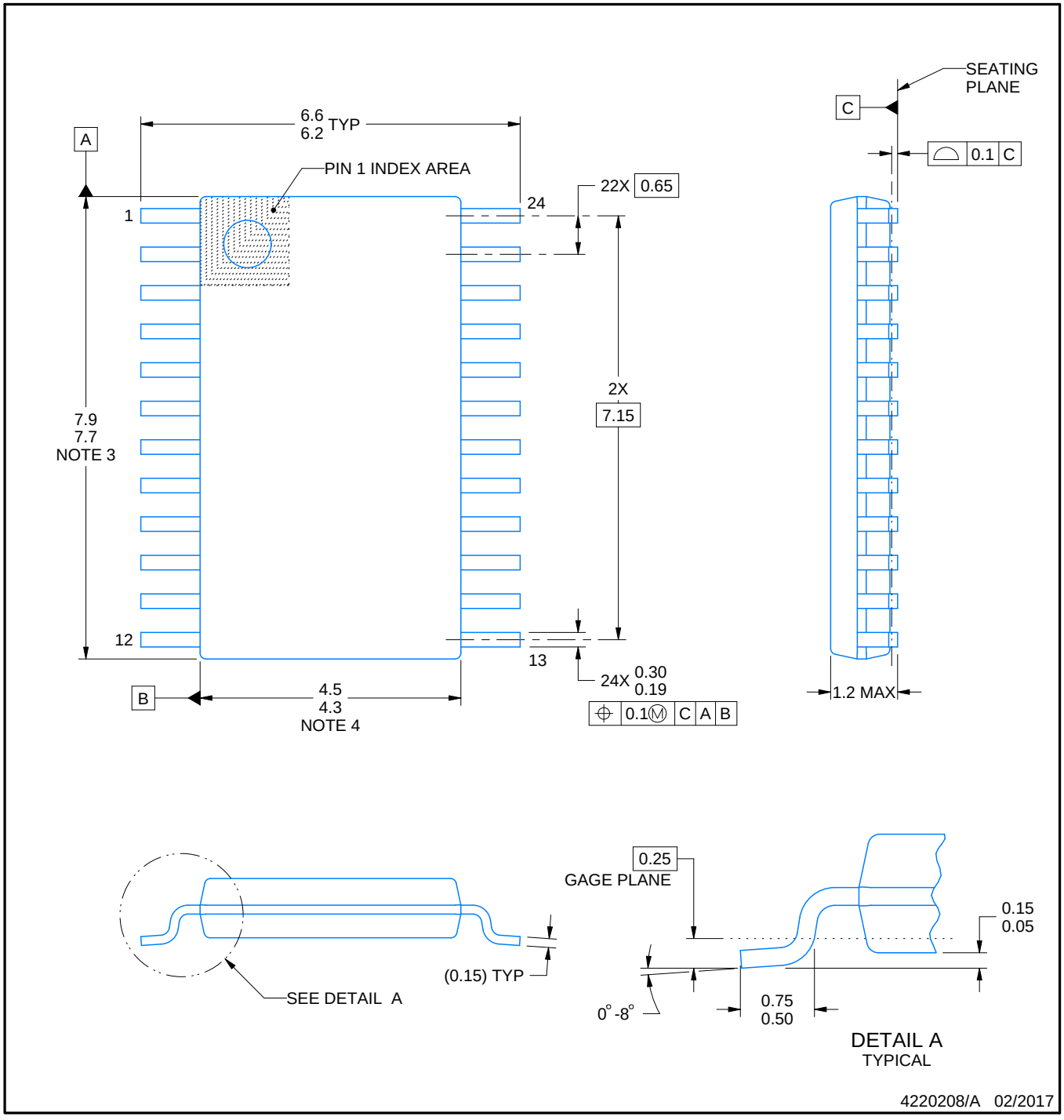

NOTES:

1. All linear dimensions are in millimeters. Any dimensions in parenthesis are for reference only. Dimensioning and tolerancing per ASME Y14.5M.
2. This drawing is subject to change without notice.
3. This dimension does not include mold flash, protrusions, or gate burrs. Mold flash, protrusions, or gate burrs shall not exceed 0.15 mm per side.
4. This dimension does not include interlead flash. Interlead flash shall not exceed 0.25 mm per side.
5. Reference JEDEC registration MO-153.

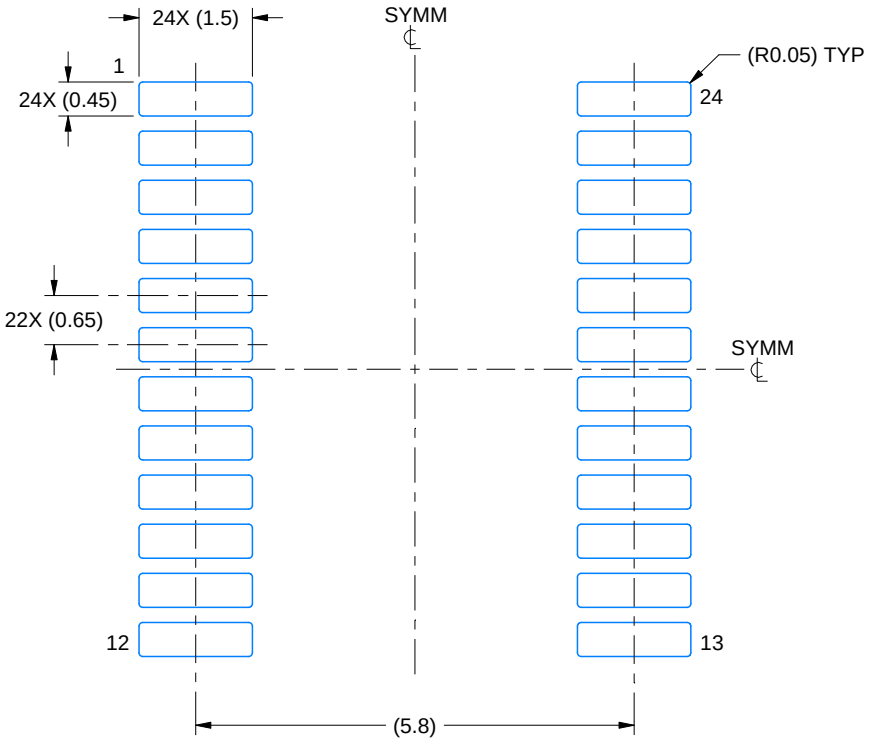

LAND PATTERN EXAMPLE
EXPOSED METAL SHOWN
SCALE: 10X

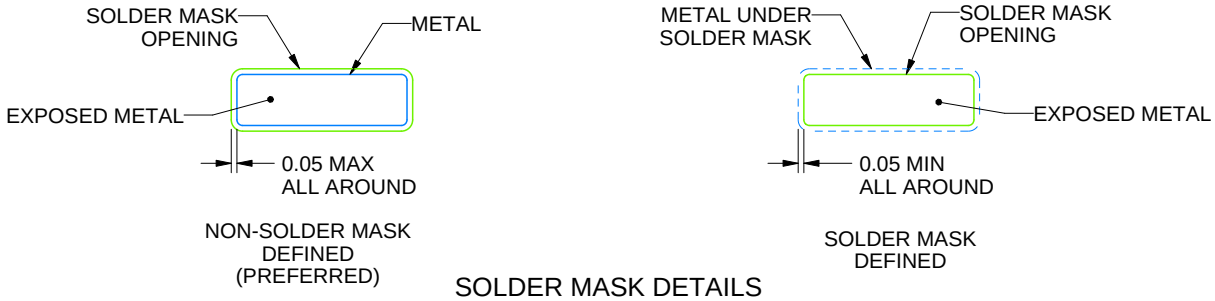

SOLDER MASK DETAILS

4220208/A 02/2017

NOTES: (continued)

6. Publication IPC-7351 may have alternate designs.
7. Solder mask tolerances between and around signal pads can vary based on board fabrication site.

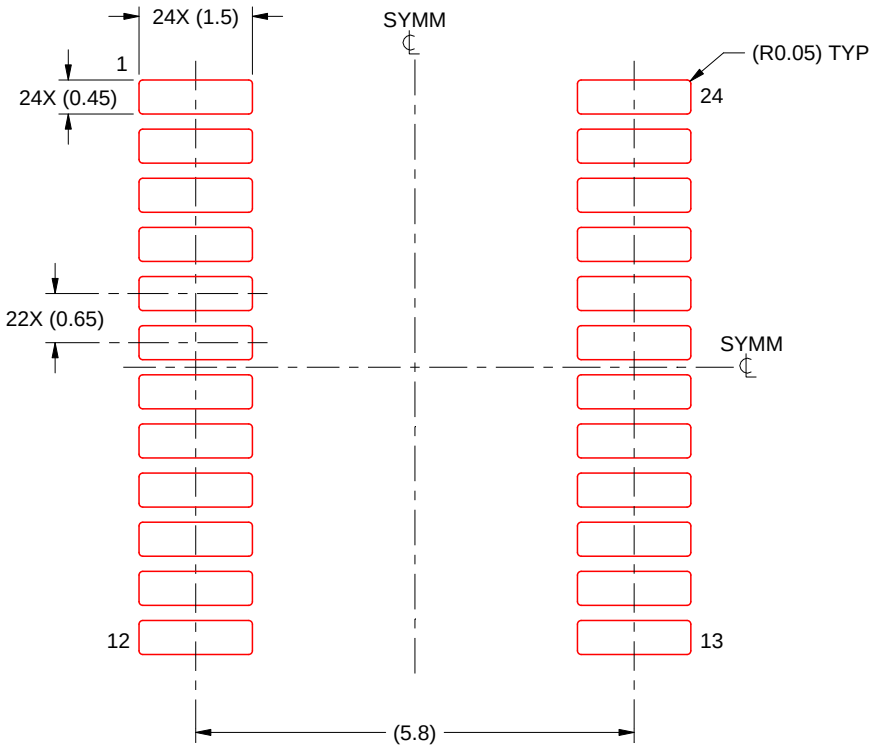

SOLDER PASTE EXAMPLE
BASED ON 0.125 mm THICK STENCIL
SCALE: 10X

4220208/A 02/2017

NOTES: (continued)

8. Laser cutting apertures with trapezoidal walls and rounded corners may offer better paste release. IPC-7525 may have alternate design recommendations.
9. Board assembly site may have different recommendations for stencil design.

IMPORTANT NOTICE AND DISCLAIMER

TI PROVIDES TECHNICAL AND RELIABILITY DATA (INCLUDING DATASHEETS), DESIGN RESOURCES (INCLUDING REFERENCE DESIGNS), APPLICATION OR OTHER DESIGN ADVICE, WEB TOOLS, SAFETY INFORMATION, AND OTHER RESOURCES “AS IS” AND WITH ALL FAULTS, AND DISCLAIMS ALL WARRANTIES, EXPRESS AND IMPLIED, INCLUDING WITHOUT LIMITATION ANY IMPLIED WARRANTIES OF MERCHANTABILITY, FITNESS FOR A PARTICULAR PURPOSE OR NON-INFRINGEMENT OF THIRD PARTY INTELLECTUAL PROPERTY RIGHTS.

These resources are intended for skilled developers designing with TI products. You are solely responsible for (1) selecting the appropriate TI products for your application, (2) designing, validating and testing your application, and (3) ensuring your application meets applicable standards, and any other safety, security, or other requirements. These resources are subject to change without notice. TI grants you permission to use these resources only for development of an application that uses the TI products described in the resource. Other reproduction and display of these resources is prohibited. No license is granted to any other TI intellectual property right or to any third party intellectual property right. TI disclaims responsibility for, and you will fully indemnify TI and its representatives against, any claims, damages, costs, losses, and liabilities arising out of your use of these resources.

TI’s products are provided subject to TI’s Terms of Sale (www.ti.com/legal/termsofsale.html) or other applicable terms available either on ti.com or provided in conjunction with such TI products. TI’s provision of these resources does not expand or otherwise alter TI’s applicable warranties or warranty disclaimers for TI products.

Mailing Address: Texas Instruments, Post Office Box 655303, Dallas, Texas 75265
Copyright © 2020, Texas Instruments Incorporated