User's Guide
SCAU028–April 2009

CDCS502 Performance Evaluation Module

This user's guide explains how to use the CDCS502 Performance EVM. The CDCS502 is soldered on the PCB for best performance. This document explains the settings in detail. The CDCS502 Performance EVM is now available.

Contents

1 Block Diagram 2
1.1 Features 2
1.2 Related Documentation 2
1.3 Additional Assistance 2
2 About the CDCS502 2
3 Quick Start 3
4 EVM Hardware 3
4.1 Hardware Configuration 3
5 Bill of Materials NO SOUCE PROVIDED 4
6 Schematics 6

List of Figures

1 CDCS502 Simplified Block Diagram 2
2 CDCS502 Printed-Circuit Board 2
3 Functional Block Diagram of the CDCS502 3
4 CDCS502 and Crystal 6
5 Jumpers Configuration 7
6 Jumpers for Control FS Pin 8
7 Jumpers for Selecting the Output 9
8 Power Supply 10
9 Output Connectors 11

List of Tables

1 Parts List 4

1 Block Diagram

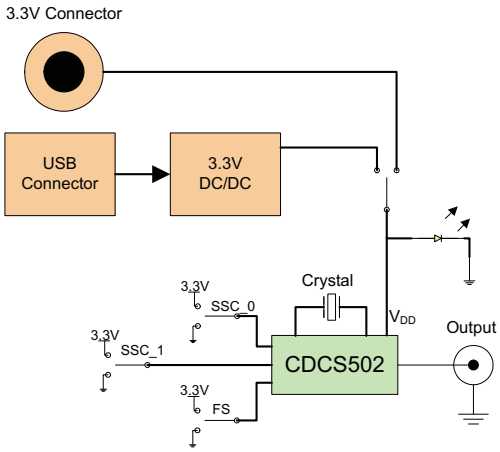

Figure 1. CDCS502 Simplified Block Diagram

1.1 Features

- Easy-to-use evaluation module for fast prototyping and application evaluation of the CDCS502
- Option for USB power or external power supply

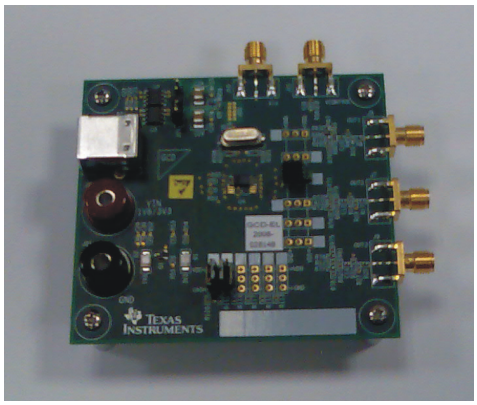

Figure 2. CDCS502 Printed-Circuit Board

1.2 Related Documentation

CDCS502 Crystal Oscillator / Clock Generator with optional SSC (SCAS868)

1.3 Additional Assistance

For assistance with this device, send an e-mail to clocks_apps@list.ti.com

2 About the CDCS502

The CDCS502 is a spread spectrum capable, fundamental mode crystal oscillator with selectable frequency multiplication.

The crystal frequency is processed by a PLL, whose output frequency is either equal to the input frequency or multiplied by a factor of 4.

The PLL is also able to spread the clock signal by ±0%, ±0.5%, ±1% or ±2% centered on the output clock frequency with a triangular modulation.

By modifying the clock signal, the device can generate output frequencies between 8MHz and 108MHz with or without SSC from a fundamental mode crystal.

In x1 Mode with an SSC amount of 0%, the device works as a standard crystal oscillator and does not make use of the built in PLL.

The CDCS502 operates in 3.3V environment and it is characterized for operation from –40°C to 85°C. The device is offered in an 8 Pin TSSOP package.

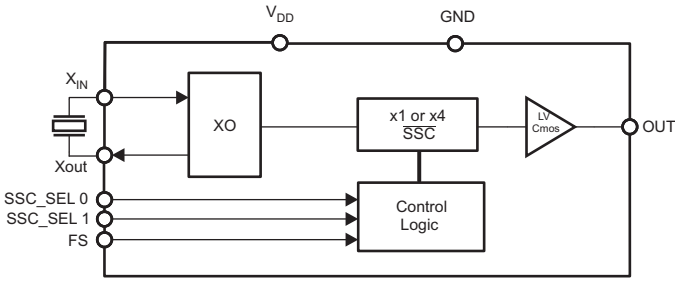

Figure 3. Functional Block Diagram of the CDCS502

3 Quick Start

The following steps allow the user to get started quickly with the EVM.

1. Connect the EVM with the PC with a USB cable or supply 3.3V using connectors J20 and J21.
2. Select the amount of Spread Spectrum and the frequency multiplication using jumpers J32, J33 and J25.
3. The desired output is available on J5

4 EVM Hardware

4.1 Hardware Configuration

This section gives an extended description of the board hardware, providing the user with a comprehensive overview of its configuration. Detailed information regarding onboard jumpers and solder-bridges are included. The user may change the setup and configure the device according to their requirements.

4.1.1 Power Supply

Power for the EVM can be supplied fully with a USB power supply or a stabilized external power supply. The following paragraphs describe how to set the board jumpers for each power supply option.

Note: All EVMs are delivered with USB power supply as default

4.1.1.1 USB Power Supply

Jumper J19 must be on and jumper J17 must be off. With this configuration the DC/DC converter generates the 3.3V necessary for the CDCS502 out of the 5V from the USB connector. Data lines from the USB are not used.

4.1.1.2 External Power Supply

For external power supply jumper J19 must be off. Only with this action an external power supply can be used.

4.1.2 Spread Spectrum Control

Jumpers J32 and J33 set the Spread Spectrum percentage.

J32: SSC_SEL1
J33: SSC_SEL0

4.1.3 Frequency Multiplication Selection

Jumper J25 selects the multiplication factor.

5 Bill of Materials NO SOUCE PROVIDED

Table 1. Parts List

QTY	Ref Des	PCB Footprint	Value	MANU	MANU Part No.	Implementation
5	C10, C12, C14, C22, C23, C25, C27, C28, C30, C39	C0402	10 nF	Panasonic - ECG	ECJ-0EB1E103K	
18	C12, C14, C23, C25, C38, C40, C41, C42, C43, C44, C46, C47, C48, C49, C50	C0402	10 nF	Panasonic - ECG	ECJ-0EB1E103K	Not Mounted
2	C21, C29	C0402	1 µF	Panasonic - ECG	ECJ-0EB1A105M	
1	C24	1210rf_wv_12d	10 µF	AVX Corporation	1210YD106KAT2A	Not Mounted
1	C26	1210rf_wv_12d	10 µF	AVX Corporation	1210YD106KAT2A	
2	C31, C32	C0402	CAP NP	Panasonic - ECG	ECJ-0EB1E103K	Not Mounted
1	D1	1210rf_wv_12d	CCL-CRS10/SM	Lumex	CCL-CRS10/SM	
1	D2	1210rf_wv_12d	CCL-CRS10/SM	Lumex	CCL-CRS10/SM	Not Mounted
1	J5	sma	SMA/PLUG	Johnson Comp	142-0701-851	
1	J7	sma	SMA/PLUG	Johnson Comp	142-0701-852	Not Mounted
1	J9	sma	SMA/PLUG	Johnson Comp	142-0701-853	Not Mounted
1	J10	sma	SMA/PLUG	Johnson Comp	142-0701-854	Not Mounted
1	J11	sma	SMA/PLUG	Johnson Comp	142-0701-855	Not Mounted
1	J16	usb_conn	CONN USB TYP B FEM	Millmax	ED90003-ND	
1	J17	jumper2	HEADER 2	AMP	Novo Shunt	Not Mounted
1	J19	jumper2	HEADER 2	AMP	Novo Shunt	
1	J20	Banana	Banana_Plug	845R	SPC Technologies	
1	J21	Banana	Banana_Plug	845B	SPC Technologies	
9	J22, J23, J24, J26, J27, J28, J29, J30, J31,	HEADER_3	HEADER 3	AMP	Novo Shunt	Not Mounted
3	J25, J32, J33,	HEADER_3	HEADER 3	AMP	Novo Shunt	
1	Q1	sot23a	MMBT2369A	Fairchild Semiconductor	MMBT2369A	Not Mounted
7	R4, R10, R14, R19, R22, R27, R52,	R0402	100 Ω	Panasonic - ECG	ERJ-2GEJ101X	Not Mounted
5	R8, R57, R102, R108, R121,	R0402	0	Panasonic - ECG	ERJ-2GE0R00X	
54	R17, R25, R56, R59, R60, R70, R86, R90, R95, R96, R97, R98, R99, R100, R101, R103, R104, R105, R106, R107, R110, R112, R113, R115, R117, R119, R122, R62, R63, R66, R69, R71, R72, R73, R74, R75, R76, R77, R78, R79, R80, R81, R82, R83, R84, R85, R87, R88, R89, R91, R92, R123, R124, R125,	R0402	0	Panasonic - ECG	ERJ-2GE0R00X	Not Mounted
1	R51	R0402	33 kΩ	Panasonic - ECG	ERJ-2GEJ333X	

Table 1. Parts List (continued)

QTY	Ref Des	PCB Footprint	Value	MANU	MANU Part No.	Implementation
1	R53	R0402	1 kΩ	Panasonic - ECG	ERJ-2GEJ013X	Not Mounted
1	R54	R0402	250 Ω	Panasonic - ECG	ERJ-2GEJ251X	
1	R55	R0402	430 Ω	Panasonic - ECG	ERJ-2GEJ431X	Not Mounted
1	U2	SO-008-1_270-04_0	TPS77518	TPS77518	Texas Instruments	Not Mounted
1	U3	SO-008-1_270-04_0	TPS77533	TPS77533	Texas Instruments	
1	U4	tssop14	CDCS502	CDCS502	Texas Instruments	
1	X1	SMD-49	Crystal	KDS	1AJ27000EEC	

6 Schematics

The CDCS502 EVM schematic is appended to this page.

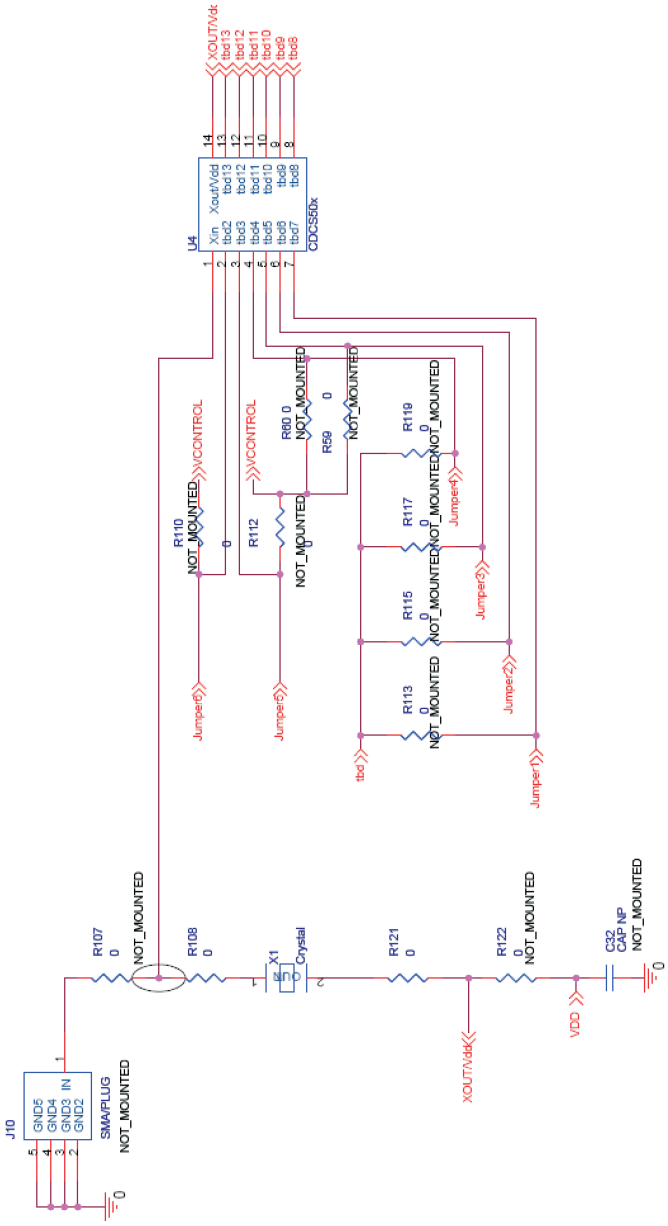

Figure 4. CDCS502 and Crystal

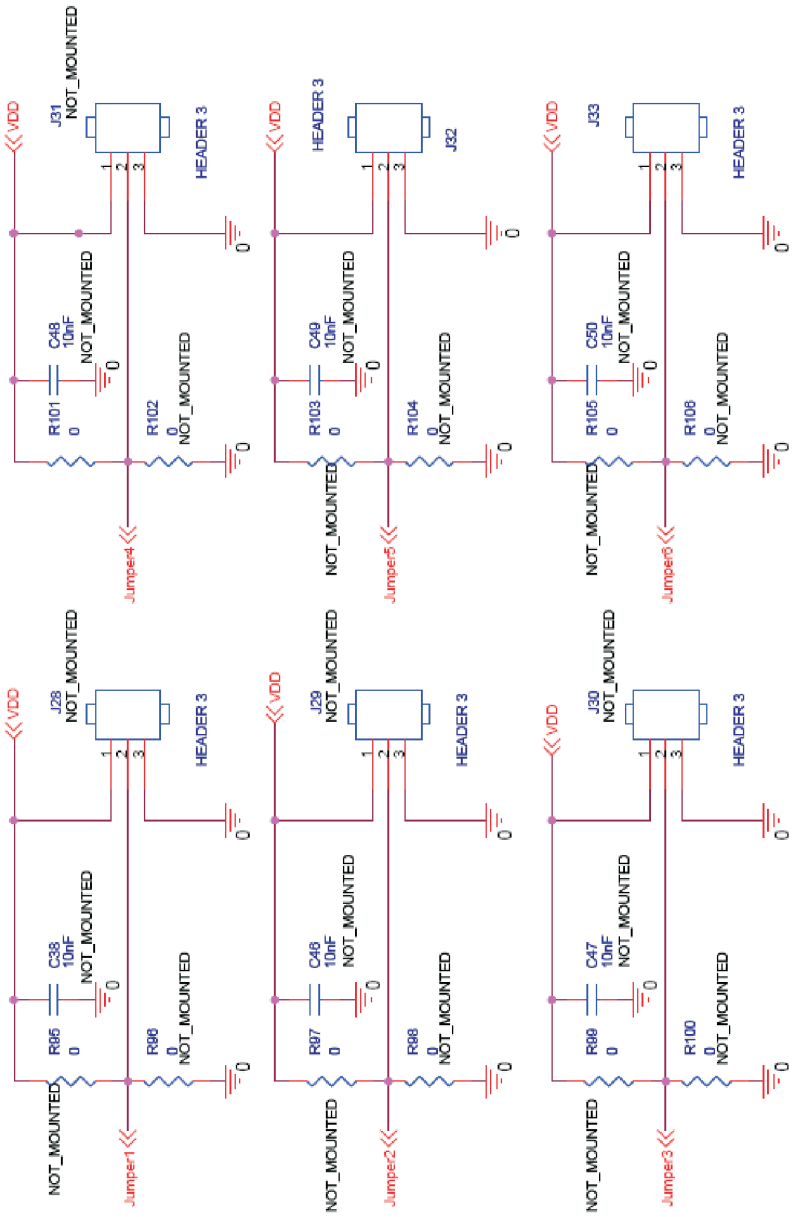

Figure 5. Jumpers Configuration

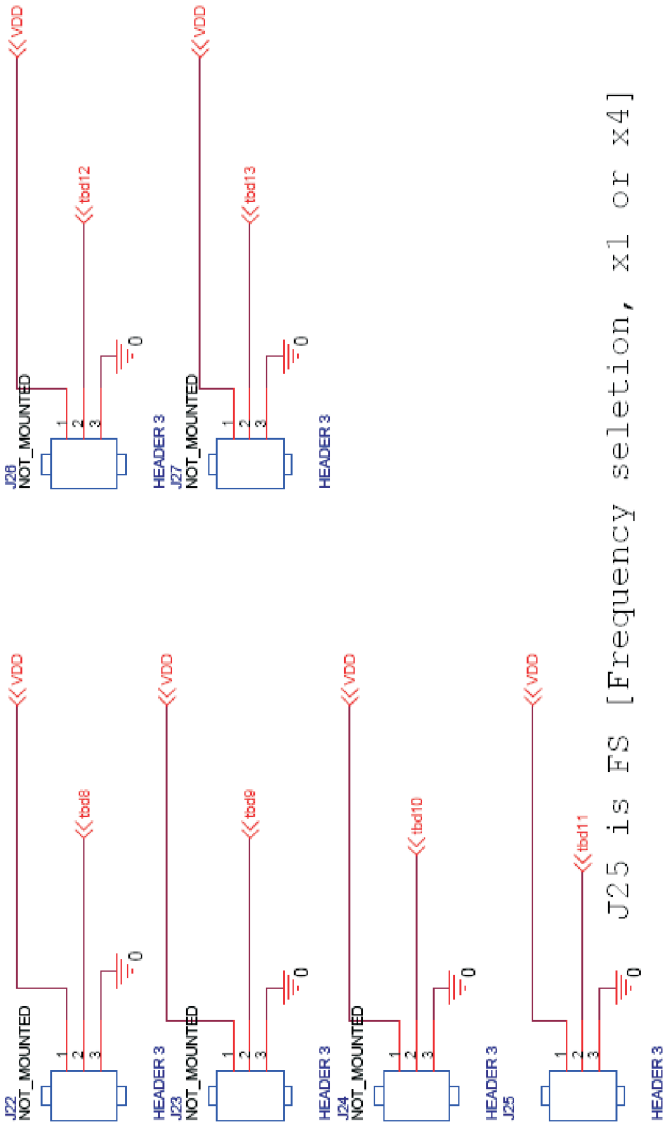

Figure 6. Jumpers for Control FS Pin

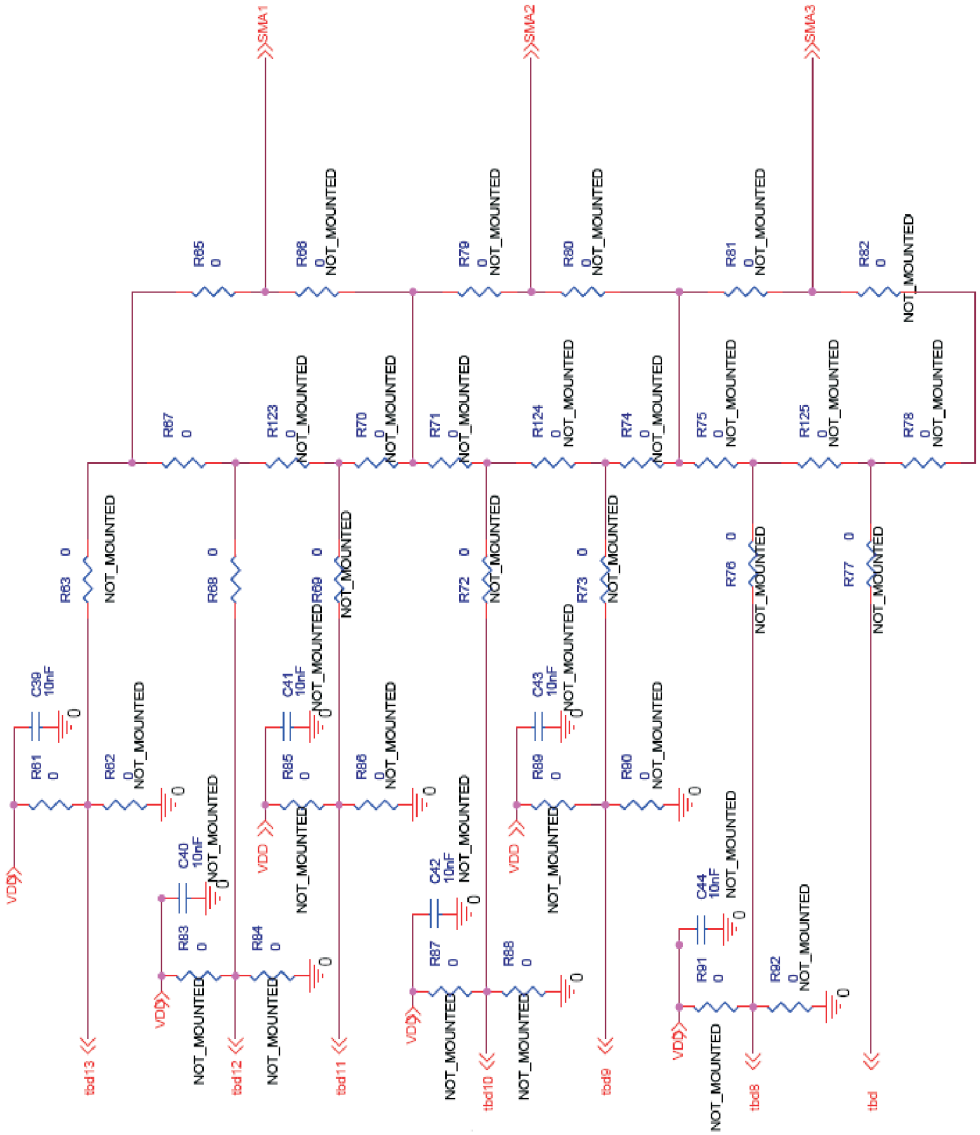

Figure 7. Jumpers for Selecting the Output

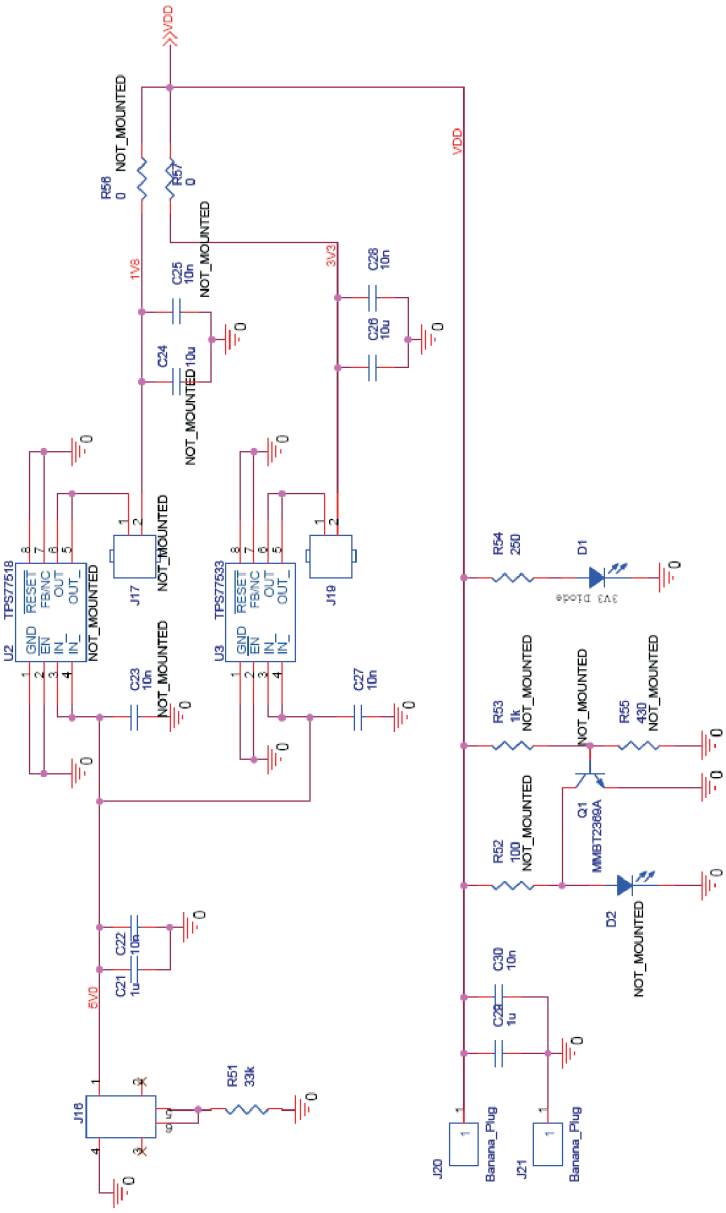

Figure 8. Power Supply

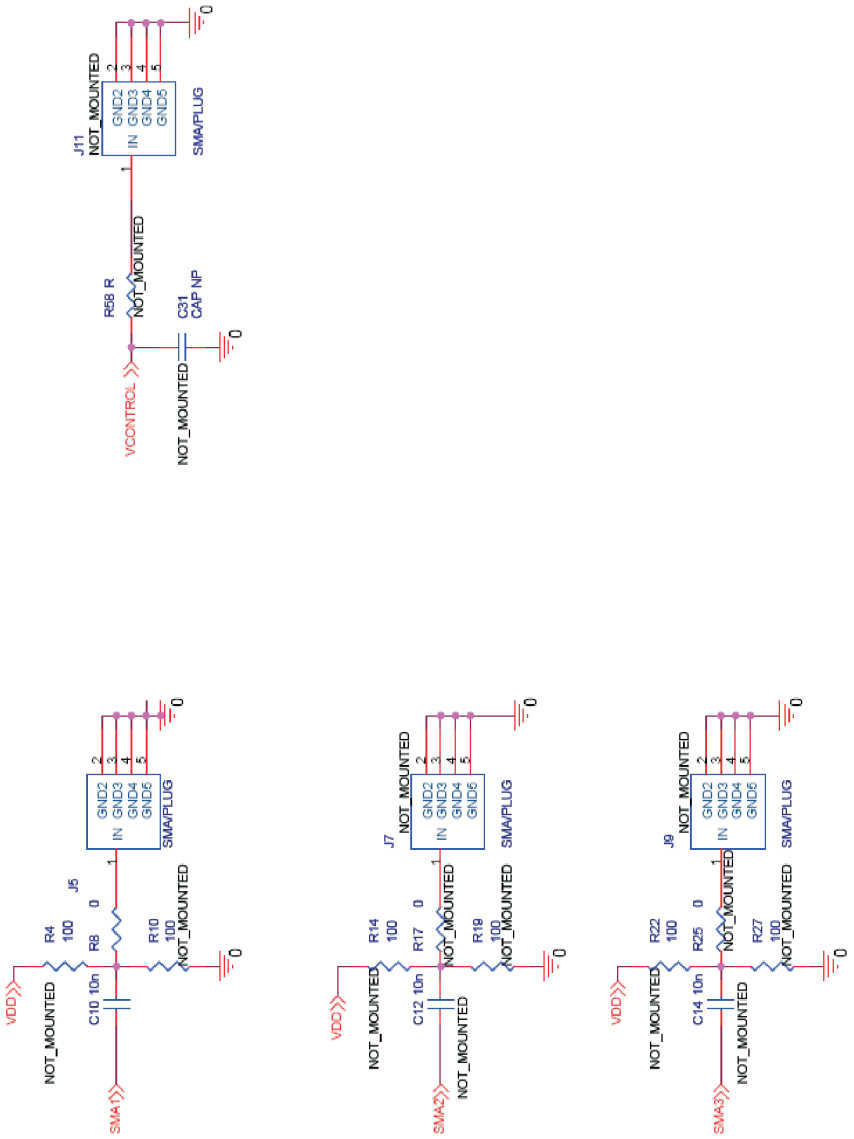

Figure 9. Output Connectors

IMPORTANT NOTICE

Texas Instruments Incorporated and its subsidiaries (TI) reserve the right to make corrections, modifications, enhancements, improvements, and other changes to its products and services at any time and to discontinue any product or service without notice. Customers should obtain the latest relevant information before placing orders and should verify that such information is current and complete. All products are sold subject to TI's terms and conditions of sale supplied at the time of order acknowledgment.

TI warrants performance of its hardware products to the specifications applicable at the time of sale in accordance with TI's standard warranty. Testing and other quality control techniques are used to the extent TI deems necessary to support this warranty. Except where mandated by government requirements, testing of all parameters of each product is not necessarily performed.

TI assumes no liability for applications assistance or customer product design. Customers are responsible for their products and applications using TI components. To minimize the risks associated with customer products and applications, customers should provide adequate design and operating safeguards.

TI does not warrant or represent that any license, either express or implied, is granted under any TI patent right, copyright, mask work right, or other TI intellectual property right relating to any combination, machine, or process in which TI products or services are used. Information published by TI regarding third-party products or services does not constitute a license from TI to use such products or services or a warranty or endorsement thereof. Use of such information may require a license from a third party under the patents or other intellectual property of the third party, or a license from TI under the patents or other intellectual property of TI.

Reproduction of TI information in TI data books or data sheets is permissible only if reproduction is without alteration and is accompanied by all associated warranties, conditions, limitations, and notices. Reproduction of this information with alteration is an unfair and deceptive business practice. TI is not responsible or liable for such altered documentation. Information of third parties may be subject to additional restrictions.

Resale of TI products or services with statements different from or beyond the parameters stated by TI for that product or service voids all express and any implied warranties for the associated TI product or service and is an unfair and deceptive business practice. TI is not responsible or liable for any such statements.

TI products are not authorized for use in safety-critical applications (such as life support) where a failure of the TI product would reasonably be expected to cause severe personal injury or death, unless officers of the parties have executed an agreement specifically governing such use. Buyers represent that they have all necessary expertise in the safety and regulatory ramifications of their applications, and acknowledge and agree that they are solely responsible for all legal, regulatory and safety-related requirements concerning their products and any use of TI products in such safety-critical applications, notwithstanding any applications-related information or support that may be provided by TI. Further, Buyers must fully indemnify TI and its representatives against any damages arising out of the use of TI products in such safety-critical applications.

TI products are neither designed nor intended for use in military/aerospace applications or environments unless the TI products are specifically designated by TI as military-grade or "enhanced plastic." Only products designated by TI as military-grade meet military specifications. Buyers acknowledge and agree that any such use of TI products which TI has not designated as military-grade is solely at the Buyer's risk, and that they are solely responsible for compliance with all legal and regulatory requirements in connection with such use.

TI products are neither designed nor intended for use in automotive applications or environments unless the specific TI products are designated by TI as compliant with ISO/TS 16949 requirements. Buyers acknowledge and agree that, if they use any non-designated products in automotive applications, TI will not be responsible for any failure to meet such requirements.

Following are URLs where you can obtain information on other Texas Instruments products and application solutions:

Products		**Applications**	
Amplifiers	amplifier.ti.com	Audio	www.ti.com/audio
Data Converters	dataconverter.ti.com	Automotive	www.ti.com/automotive
DLP® Products	www.dlp.com	Broadband	www.ti.com/broadband
DSP	dsp.ti.com	Digital Control	www.ti.com/digitalcontrol
Clocks and Timers	www.ti.com/clocks	Medical	www.ti.com/medical
Interface	interface.ti.com	Military	www.ti.com/military
Logic	logic.ti.com	Optical Networking	www.ti.com/opticalnetwork
Power Mgmt	power.ti.com	Security	www.ti.com/security
Microcontrollers	microcontroller.ti.com	Telephony	www.ti.com/telephony
RFID	www.ti-rfid.com	Video & Imaging	www.ti.com/video
RF/IF and ZigBee® Solutions	www.ti.com/lprf	Wireless	www.ti.com/wireless

Mailing Address: Texas Instruments, Post Office Box 655303, Dallas, Texas 75265
Copyright © 2009, Texas Instruments Incorporated