Low Additive Phase Noise Clock Buffer Evaluation Board

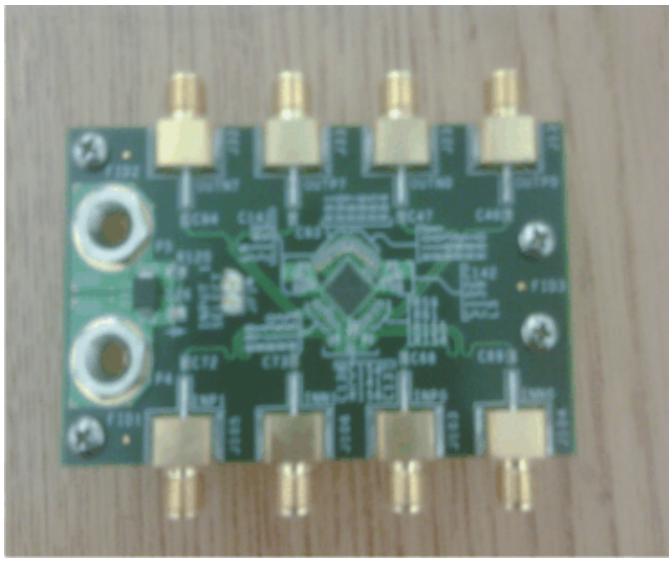

Figure 1. CDCLVP1208EVM Evaluation Board

Features:

- Easy-to-use evaluation board to fan out low phase noise clocks
- Easy device setup
- Fast configuration
- Control pins configurable through jumpers
- Board powered at +2.5-V/+3.3-V
- Single-ended or differential input clocks
- CDCLVP1208 supports eight LVPECL outputs; CDCLVP1208EVM supports four LVPECL outputs

Contents

1 General Description 2
2 Signal Path and Control Circuitry 2
3 Getting Started 2
4 Input Clock Selection 2
5 Output Clock 3
6 Schematics and Layout 3

List of Figures

1 CDCLVP1208EVM Evaluation Board 1
2 CDCLVP1208EVM—Schematic 3
3 CDCLVP1208EVM—Schematic 4

All trademarks are the property of their respective owners.

Copyright © 2009, Texas Instruments Incorporated

1 General Description

The CDCLVP1208 is a high-performance, low additive phase noise clock buffer. It has two universal input buffers that support either single-ended or differential clock inputs, selectable through a control pin. The device also features on-chip bias generators that can provide the LVPECL common-mode voltage to the device inputs..

This evaluation module (EVM) is designed to demonstrate the electrical performance of the CDCLVP1208. This fully assembled and factory-tested evaluation board allows complete validation of the CDCLVP1208 device functionalities. Throughout this document, the acronym *EVM* and the phrases *evaluation module* and *evaluation board* are synonymous with the CDCLVP1208EVM. See Figure 1 for an illustration of the CDCLVP1208EVM.

For optimum performance, the board is equipped with 50-Ω SMA connectors and well-controlled, 50-Ω impedance microstrip transmission lines.

2 Signal Path and Control Circuitry

The CDCLVP1208 supports single-ended inputs up to 200 MHz and differential inputs up to 2 GHz. The device provides up to eight LVPECL outputs operating at the input frequency. For more information about the CDCLVP1208, see the CDCLVP1208 product data sheet available for download from the TI web site (www.ti.com).

3 Getting Started

The CDCLVP1208EVM has self-explanatory labeling and uses similar naming conventions as the CDCLVP1208 product data sheet. In this user's guide, all words in ***boldface and italic print*** reflect the actual labeling on the EVM. The CDCLVP1208EVM can be used with either single-ended or differential inputs.

3.1 Power-Supply Connections

Connect the power-supply source to the banana plug labeled ***VDD (P4)***, and connect the ground of the power-supply source to ***GND (P5)***. There are decoupling capacitors and a ferrite bead to isolate the EVM power from the CDCLVP1208 device power pins.

The CDCLVP1208EVM can use a supply voltage of 2.375 V to 3.6 V.

4 Input Clock Selection

The CDCLVP1208EVM offers users the option of receiving either a differential or single-ended clock as the clock input. The default option is for the differential signal at both device inputs. The inputs can be applied through the SMAs (J103, J104 or J105, J106). These inputs are ac-coupled to the device inputs. The common-mode voltage for these inputs after the ac-coupling capacitors is provided by 50 Ω (R152, R153 and R154, R155) to the device on-chip bias generator (V_{AC_REF}) pins. Either of the two input clocks can be selected using jumper JP1. When JP1 is shorted, IN0 is selected. When JP1 is open, IN1 is selected.

4.1 Configuring Single-Ended Input

For a single-ended clock applied to IN0, remove capacitors C68 and C69 and replace them with 0-Ω resistors of the same footprint. The single-ended signal should be applied to INP0 (J103) and the dc bias voltage should be applied to INN0 (J104).

For a single-ended clock applied to IN1, remove capacitors C72 and C73 and replace them with 0-Ω resistors of the same footprint. The single-ended signal should be applied to INP1 (J105) and the dc bias voltage should be applied to INN1 (J106).

Copyright © 2009, Texas Instruments Incorporated

5 Output Clock

The CDCLVP1208 generates up to eight LVPECL outputs. Four outputs are available on the CDCLVP1208EVM (outputs 0, 3, 4, and 7) through the following SMAs:

- J13, J23 for OUT0
- J17, J27 for OUT3
- J33, J32 for OUT4
- J39, J38 for OUT7

The LVPECL outputs are terminated with 150 Ω to ground and ac-coupled to the respective SMAs.

6 Schematics and Layout

Figure 2 and Figure 3 show the printed circuit board (PCB) schematics.

NOTE: Board layouts are not to scale. These figures are intended to show how the board is laid out; they are not intended to be used for manufacturing CDCLVP1208EVM PCBs.

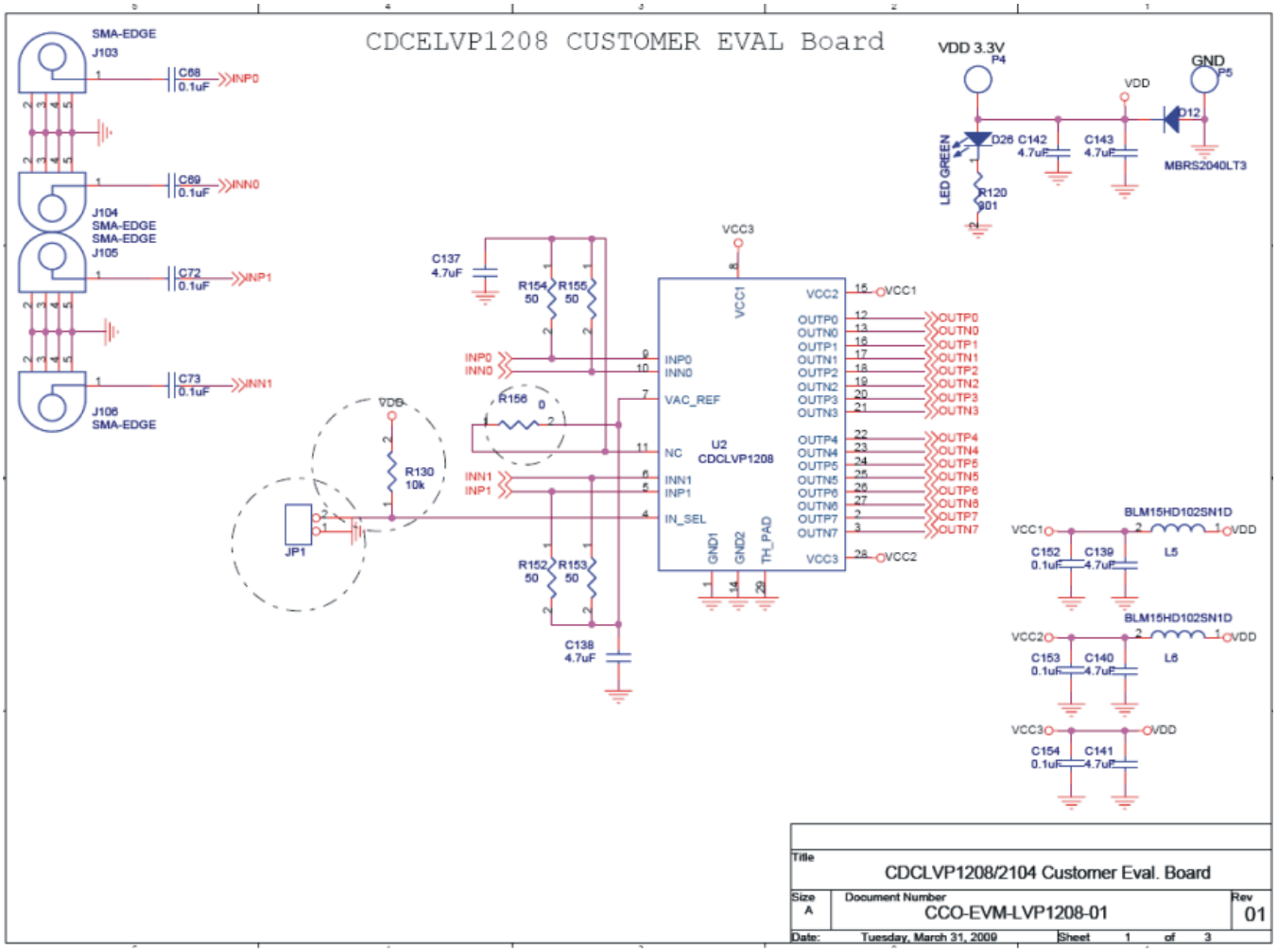

Figure 2. CDCLVP1208EVM—Schematic

Copyright © 2009, Texas Instruments Incorporated

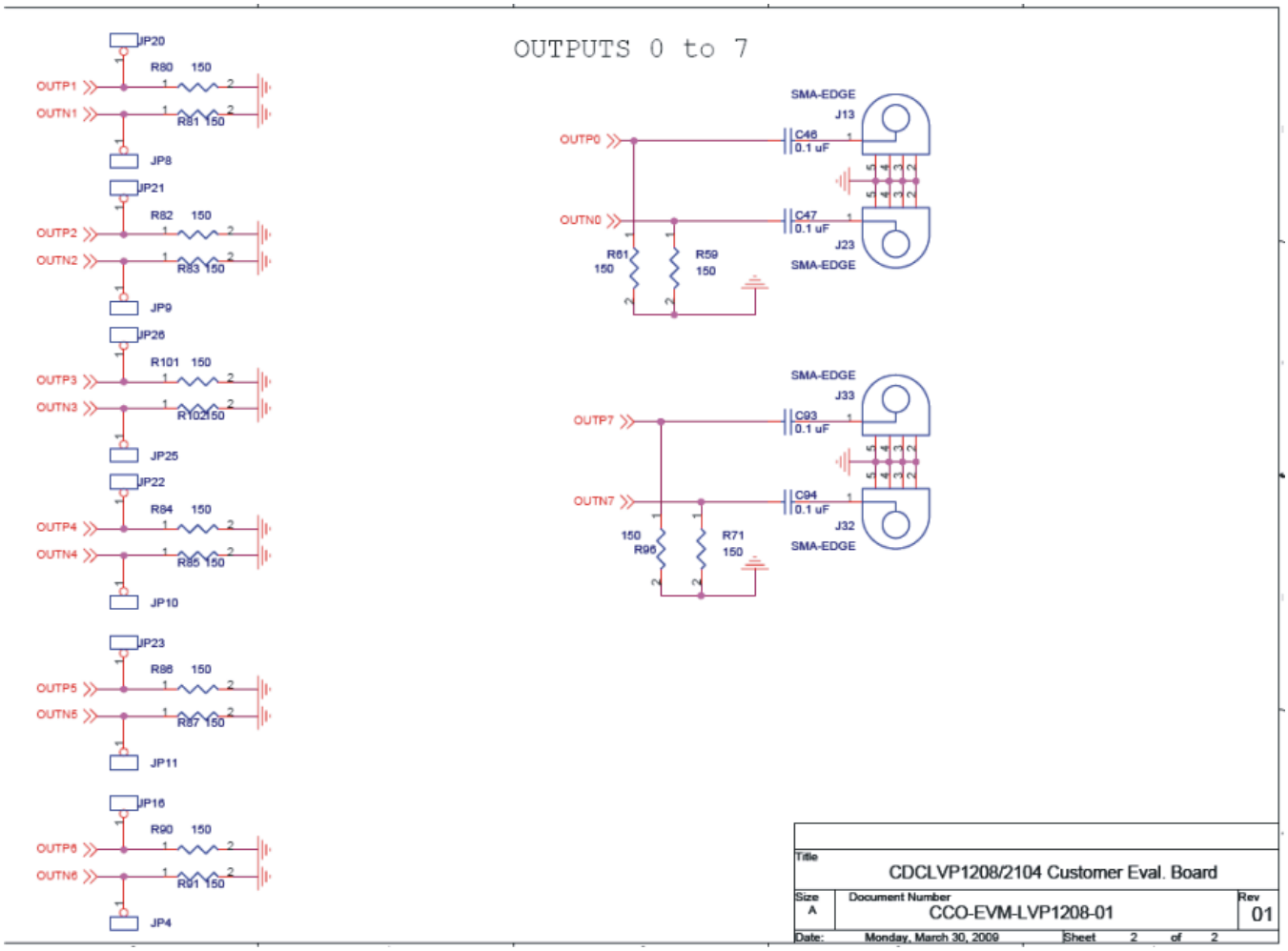

Figure 3. CDCLVP1208EVM—Schematic

Copyright © 2009, Texas Instruments Incorporated

Evaluation Board/Kit Important Notice

Texas Instruments (TI) provides the enclosed product(s) under the following conditions:

This evaluation board/kit is intended for use for **ENGINEERING DEVELOPMENT, DEMONSTRATION, OR EVALUATION PURPOSES ONLY** and is not considered by TI to be a finished end-product fit for general consumer use. Persons handling the product(s) must have electronics training and observe good engineering practice standards. As such, the goods being provided are not intended to be complete in terms of required design-, marketing-, and/or manufacturing-related protective considerations, including product safety and environmental measures typically found in end products that incorporate such semiconductor components or circuit boards. This evaluation board/kit does not fall within the scope of the European Union directives regarding electromagnetic compatibility, restricted substances (RoHS), recycling (WEEE), FCC, CE or UL, and therefore may not meet the technical requirements of these directives or other related directives.

Should this evaluation board/kit not meet the specifications indicated in the User's Guide, the board/kit may be returned within 30 days from the date of delivery for a full refund. THE FOREGOING WARRANTY IS THE EXCLUSIVE WARRANTY MADE BY SELLER TO BUYER AND IS IN LIEU OF ALL OTHER WARRANTIES, EXPRESSED, IMPLIED, OR STATUTORY, INCLUDING ANY WARRANTY OF MERCHANTABILITY OR FITNESS FOR ANY PARTICULAR PURPOSE.

The user assumes all responsibility and liability for proper and safe handling of the goods. Further, the user indemnifies TI from all claims arising from the handling or use of the goods. Due to the open construction of the product, it is the user's responsibility to take any and all appropriate precautions with regard to electrostatic discharge.

EXCEPT TO THE EXTENT OF THE INDEMNITY SET FORTH ABOVE, NEITHER PARTY SHALL BE LIABLE TO THE OTHER FOR ANY INDIRECT, SPECIAL, INCIDENTAL, OR CONSEQUENTIAL DAMAGES.

TI currently deals with a variety of customers for products, and therefore our arrangement with the user **is not exclusive.**

TI assumes **no liability for applications assistance, customer product design, software performance, or infringement of patents or services described herein.**

Please read the User's Guide and, specifically, the Warnings and Restrictions notice in the User's Guide prior to handling the product. This notice contains important safety information about temperatures and voltages. For additional information on TI's environmental and/or safety programs, please contact the TI application engineer or visit www.ti.com/esh.

No license is granted under any patent right or other intellectual property right of TI covering or relating to any machine, process, or combination in which such TI products or services might be or are used.

FCC Warning

This evaluation board/kit is intended for use for **ENGINEERING DEVELOPMENT, DEMONSTRATION, OR EVALUATION PURPOSES ONLY** and is not considered by TI to be a finished end-product fit for general consumer use. It generates, uses, and can radiate radio frequency energy and has not been tested for compliance with the limits of computing devices pursuant to part 15 of FCC rules, which are designed to provide reasonable protection against radio frequency interference. Operation of this equipment in other environments may cause interference with radio communications, in which case the user at his own expense will be required to take whatever measures may be required to correct this interference.

EVM Warnings and Restrictions

It is important to operate this EVM within the input voltage range of –0.5 V to 4.0 V and the output voltage range of 0 V to 3.6 V.

Exceeding the specified input range may cause unexpected operation and/or irreversible damage to the EVM. If there are questions concerning the input range, please contact a TI field representative prior to connecting the input power.

Applying loads outside of the specified output range may result in unintended operation and/or possible permanent damage to the EVM. Please consult the EVM User's Guide prior to connecting any load to the EVM output. If there is uncertainty as to the load specification, please contact a TI field representative.

During normal operation, some circuit components may have case temperatures greater than +120° C. The EVM is designed to operate properly with certain components above +85° C as long as the input and output ranges are maintained. These components include but are not limited to linear regulators, switching transistors, pass transistors, and current sense resistors. These types of devices can be identified using the EVM schematic located in the EVM User's Guide. When placing measurement probes near these devices during operation, please be aware that these devices may be very warm to the touch.

Mailing Address: Texas Instruments, Post Office Box 655303, Dallas, Texas 75265
Copyright © 2009, Texas Instruments Incorporated

IMPORTANT NOTICE

Texas Instruments Incorporated and its subsidiaries (TI) reserve the right to make corrections, modifications, enhancements, improvements, and other changes to its products and services at any time and to discontinue any product or service without notice. Customers should obtain the latest relevant information before placing orders and should verify that such information is current and complete. All products are sold subject to TI's terms and conditions of sale supplied at the time of order acknowledgment.

TI warrants performance of its hardware products to the specifications applicable at the time of sale in accordance with TI's standard warranty. Testing and other quality control techniques are used to the extent TI deems necessary to support this warranty. Except where mandated by government requirements, testing of all parameters of each product is not necessarily performed.

TI assumes no liability for applications assistance or customer product design. Customers are responsible for their products and applications using TI components. To minimize the risks associated with customer products and applications, customers should provide adequate design and operating safeguards.

TI does not warrant or represent that any license, either express or implied, is granted under any TI patent right, copyright, mask work right, or other TI intellectual property right relating to any combination, machine, or process in which TI products or services are used. Information published by TI regarding third-party products or services does not constitute a license from TI to use such products or services or a warranty or endorsement thereof. Use of such information may require a license from a third party under the patents or other intellectual property of the third party, or a license from TI under the patents or other intellectual property of TI.

Reproduction of TI information in TI data books or data sheets is permissible only if reproduction is without alteration and is accompanied by all associated warranties, conditions, limitations, and notices. Reproduction of this information with alteration is an unfair and deceptive business practice. TI is not responsible or liable for such altered documentation. Information of third parties may be subject to additional restrictions.

Resale of TI products or services with statements different from or beyond the parameters stated by TI for that product or service voids all express and any implied warranties for the associated TI product or service and is an unfair and deceptive business practice. TI is not responsible or liable for any such statements.

TI products are not authorized for use in safety-critical applications (such as life support) where a failure of the TI product would reasonably be expected to cause severe personal injury or death, unless officers of the parties have executed an agreement specifically governing such use. Buyers represent that they have all necessary expertise in the safety and regulatory ramifications of their applications, and acknowledge and agree that they are solely responsible for all legal, regulatory and safety-related requirements concerning their products and any use of TI products in such safety-critical applications, notwithstanding any applications-related information or support that may be provided by TI. Further, Buyers must fully indemnify TI and its representatives against any damages arising out of the use of TI products in such safety-critical applications.

TI products are neither designed nor intended for use in military/aerospace applications or environments unless the TI products are specifically designated by TI as military-grade or "enhanced plastic." Only products designated by TI as military-grade meet military specifications. Buyers acknowledge and agree that any such use of TI products which TI has not designated as military-grade is solely at the Buyer's risk, and that they are solely responsible for compliance with all legal and regulatory requirements in connection with such use.

TI products are neither designed nor intended for use in automotive applications or environments unless the specific TI products are designated by TI as compliant with ISO/TS 16949 requirements. Buyers acknowledge and agree that, if they use any non-designated products in automotive applications, TI will not be responsible for any failure to meet such requirements.

Following are URLs where you can obtain information on other Texas Instruments products and application solutions:

Products		**Applications**	
Amplifiers	amplifier.ti.com	Audio	www.ti.com/audio
Data Converters	dataconverter.ti.com	Automotive	www.ti.com/automotive
DLP® Products	www.dlp.com	Broadband	www.ti.com/broadband
DSP	dsp.ti.com	Digital Control	www.ti.com/digitalcontrol
Clocks and Timers	www.ti.com/clocks	Medical	www.ti.com/medical
Interface	interface.ti.com	Military	www.ti.com/military
Logic	logic.ti.com	Optical Networking	www.ti.com/opticalnetwork
Power Mgmt	power.ti.com	Security	www.ti.com/security
Microcontrollers	microcontroller.ti.com	Telephony	www.ti.com/telephony
RFID	www.ti-rfid.com	Video & Imaging	www.ti.com/video
RF/IF and ZigBee® Solutions	www.ti.com/lprf	Wireless	www.ti.com/wireless

Mailing Address: Texas Instruments, Post Office Box 655303, Dallas, Texas 75265
Copyright © 2009, Texas Instruments Incorporated