2:16 Low Additive Jitter LVDS Buffer

Check for Samples: CDCLVD1216

FEATURES

- **2:16 Differential Buffer**
- **Low Additive Jitter: <300 fs RMS in 10 kHz to 20 MHz**
- **Low Output Skew of 55 ps (Max)**
- **Universal Inputs Accept LVDS, LVPECL, LVCMOS**
- **Selectable Clock Inputs Through Control Pin**
- **16 LVDS Outputs, ANSI EIA/TIA-644A Standard Compatible**
- **Clock Frequency up to 800 MHz**
- **2.375–2.625V Device Power Supply**
- **LVDS Reference Voltage, V_{AC_REF}, Available for Capacitive Coupled Inputs**
- **Industrial Temperature Range –40°C to 85°C**
- **Packaged in 7mm × 7mm 48-Pin QFN (RGZ)**
- **ESD Protection Exceeds 3 kV HBM, 1 kV CDM**

APPLICATIONS

- **Telecommunications/Networking**
- **Medical Imaging**
- **Test and Measurement Equipment**
- **Wireless Communications**
- **General Purpose Clocking**

DESCRIPTION

The CDCLVD1216 clock buffer distributes one of two selectable clock inputs (IN0, IN1) to 16 pairs of differential LVDS clock outputs (OUT0, OUT15) with minimum skew for clock distribution. The CDCLVD1216 can accept two clock sources into an input multiplexer. The inputs can either be LVDS, LVPECL, or LVCMOS.

The CDCLVD1216 is specifically designed for driving 50 Ω transmission lines. If driving the inputs in single ended mode, the appropriate bias voltage (V_{AC_REF}) should be applied to the unused negative input pin.

The IN_SEL pin selects the input which is routed to the outputs. If this pin is left open it disables the outputs (static). The part supports a fail safe function. It incorporates an input hysteresis, which prevents random oscillation of the outputs in absence of an input signal.

The device operates in 2.5 V supply environment and is characterized from –40°C to 85°C (ambient temperature). The CDCLVD1216 is packaged in small 48-pin, 7mm × 7mm QFN package.

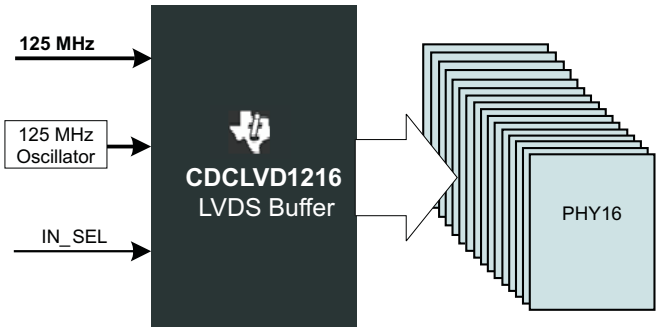

Figure 1. Application Example

Please be aware that an important notice concerning availability, standard warranty, and use in critical applications of Texas Instruments semiconductor products and disclaimers thereto appears at the end of this data sheet.

PRODUCTION DATA information is current as of publication date. Products conform to specifications per the terms of the Texas Instruments standard warranty. Production processing does not necessarily include testing of all parameters.

Copyright © 2010–2011, Texas Instruments Incorporated

These devices have limited built-in ESD protection. The leads should be shorted together or the device placed in conductive foam during storage or handling to prevent electrostatic damage to the MOS gates.

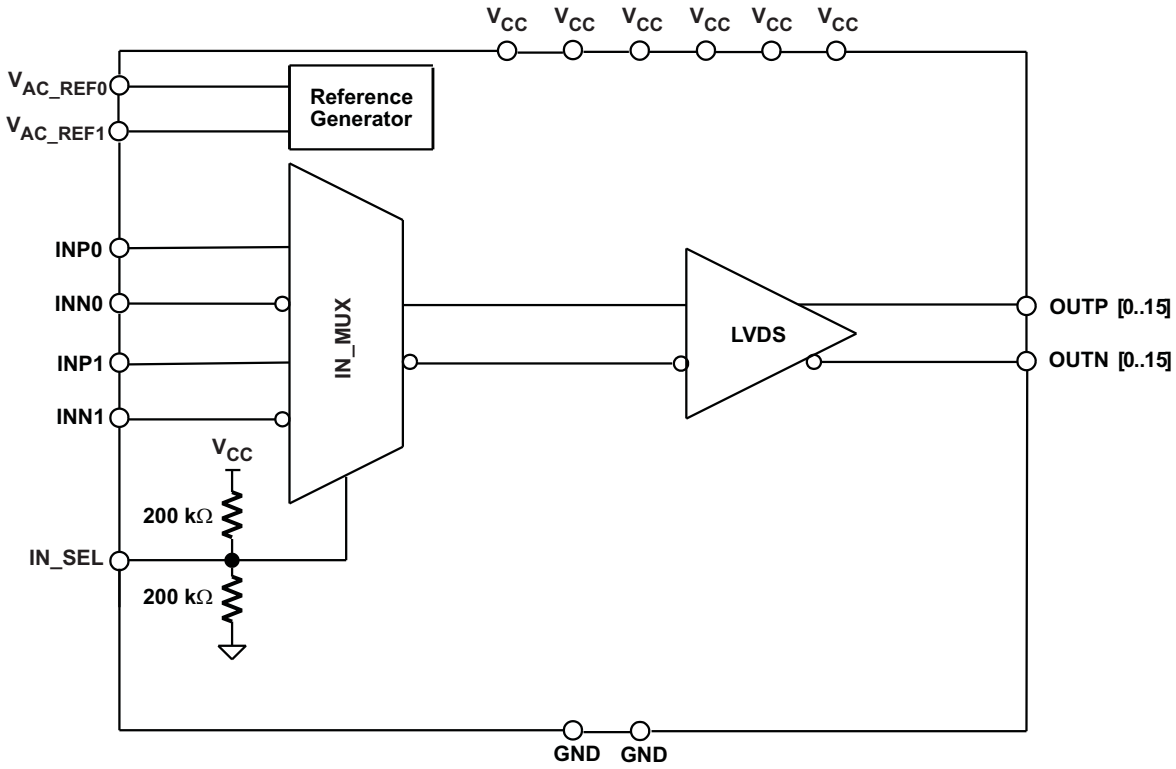

Figure 2. CDCLVD1216 Block Diagram

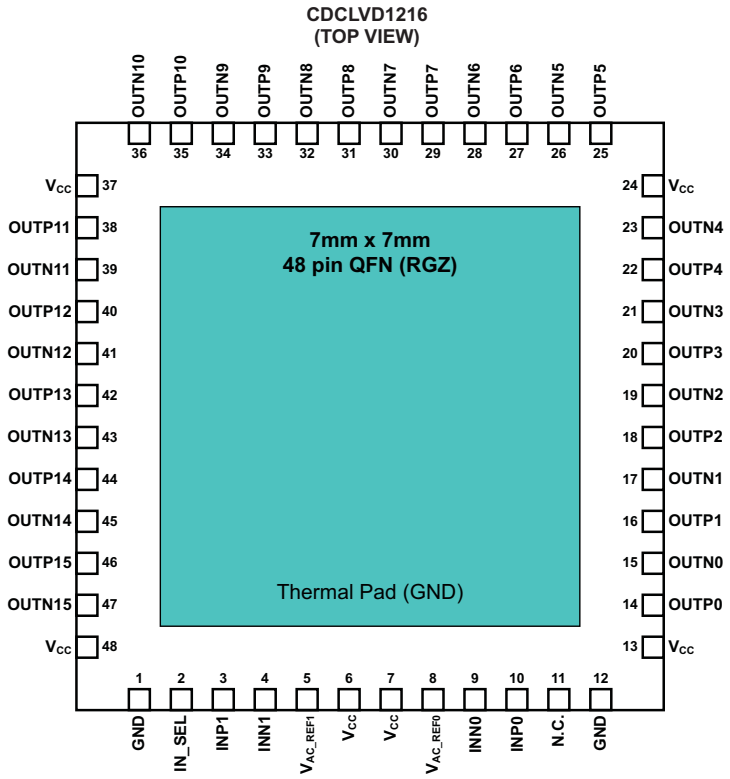

Copyright © 2010–2011, Texas Instruments Incorporated

PIN FUNCTIONS

PIN			
NAME	NO.	TYPE	DESCRIPTION
V_{CC}	6, 7, 13, 24, 37, 48	Power	2.5V supplies for the device
GND	1, 12	Ground	Device ground
INP0, INN0	10, 9	Input	Differential input pair or single ended input
INP1, INN1	3, 4	Input	Differential redundant input pair or single ended input
OUTP0, OUTN0	14, 15	Output	Differential LVDS output pair no. 0
OUTP1, OUTN1	16, 17	Output	Differential LVDS output pair no. 1
OUTP2, OUTN2	18, 19	Output	Differential LVDS output pair no. 2
OUTP3, OUTN3	20, 21	Output	Differential LVDS output pair no. 3
OUTP4, OUTN4	22, 23	Output	Differential LVDS output pair no. 4
OUTP5, OUTN5	25, 26	Output	Differential LVDS output pair no. 5
OUTP6, OUTN6	27, 28	Output	Differential LVDS output pair no. 6
OUTP7, OUTN7	29, 30	Output	Differential LVDS output pair no. 7
OUTP8, OUTN8	31, 32	Output	Differential LVDS output pair no. 8
OUTP9, OUTN9	33, 34	Output	Differential LVDS output pair no. 9
OUTP10, OUTN10	35, 36	Output	Differential LVDS output pair no. 10
OUTP11, OUTN11	38, 39	Output	Differential LVDS output pair no. 11
OUTP12, OUTN12	40, 41	Output	Differential LVDS output pair no. 12
OUTP13, OUTN13	42, 43	Output	Differential LVDS output pair no. 13
OUTP14, OUTN14	44, 45	Output	Differential LVDS output pair no. 14
OUTP15, OUTN15	46, 47	Output	Differential LVDS output pair no. 15
V_{AC_REF0}	8	Output	Bias voltage output for capacitive coupled inputs. If used, it is recommended to use a 0.1µF to GND on this pin.
V_{AC_REF1}	5	Output	Bias voltage output for capacitive coupled inputs. If used, it is recommended to use a 0.1µF to GND on this pin.
N.C.	11		No connect
IN_SEL	2	Input with an internal 200kΩ pull-up and pull-down	Input selection – selects input port; (See Table 1)
Thermal Pad		Ground	Device ground. Thermal Pad must be soldered to ground. See thermal management recommendations.

Table 1. Input Selection Table

IN_SEL	ACTIVE CLOCK INPUT
0	INP0, INN0
1	INP1, INN1
Open	None(1)

(1) The input buffers are disabled and the outputs are static.

Copyright © 2010–2011, Texas Instruments Incorporated

ABSOLUTE MAXIMUM RATINGS

over operating free-air temperature range (unless otherwise noted) (1)

	VALUE	UNIT
Supply voltage range, V_{CC}	–0.3 to 2.8	V
Input voltage range, V_I	–0.2 to (V_{CC} + 0.2)	V
Output voltage range, V_O	–0.2 to (V_{CC} + 0.2)	V
Driver short circuit current, I_{OSD}	See Note (2)	
Electrostatic discharge (Human Body Model, 1.5 kΩ, 100 pF)	>3000	V

(1) Stresses beyond those listed under “absolute maximum ratings” may cause permanent damage to the device. These are stress ratings only and functional operation of the device at these or any other conditions beyond those indicated under recommended operating conditions” is not implied. Exposure to absolute–maximum–rated conditions for extended periods may affect device reliability.
(2) The outputs can handle permanent short.

RECOMMENDED OPERATING CONDITIONS

	MIN	TYP	MAX	UNIT
Device supply voltage, V_{CC}	2.375	2.5	2.625	V
Ambient temperature, T_A	–40		85	°C

THERMAL INFORMATION

THERMAL METRIC(1)		CDCLVD1216 RGZ(48 PINS)	UNITS
θ_{JA}	Junction-to-ambient thermal resistance	30.6	°C/W
$\theta_{JC(top)}$	Junction-to-case(top) thermal resistance	28.5	
θ_{JB}	Junction-to-board thermal resistance	10.5	
ψ_{JT}	Junction-to-top characterization parameter	0.4	
ψ_{JB}	Junction-to-board characterization parameter	10.2	
$\theta_{JC(bottom)}$	Junction-to-case(bottom) thermal resistance	3.1	

(1) For more information about traditional and new thermal metrics, see the *IC Package Thermal Metrics* application report, SPRA953.

ELECTRICAL CHARACTERISTICS

At V_{CC} = 2.375V to 2.625V, T_A = –40°C to 85°C (unless otherwise noted)

PARAMETER		TEST CONDITIONS	MIN	TYP	MAX	UNIT
IN_SEL CONTROL INPUT CHARACTERISTICS						
V_{dI3}	3 State	Open		0.5×V_{CC}		V
V_{dIH}	Input high voltage		0.7×V_{CC}			V
V_{dIL}	Input low voltage				0.2×V_{CC}	V
I_{dIH}	Input high current	V_{CC} = 2.625 V, V_{IH} = 2.625 V			30	µA
I_{dIL}	Input low current	V_{CC} = 2.625 V, V_{IL}= 0V			–30	µA
$R_{pull(IN_SEL)}$	Input pull-up/ pull-down resistor			200		kΩ
2.5V LVCMOS (see Figure 7) INPUT CHARACTERISTICS						
f_{IN}	Input frequency				200	MHz
V_{th}	Input threshold voltage	External threshold voltage applied to complementary input	1.1		1.5	V
V_{IH}	Input high voltage		V_{th} + 0.1		V_{CC}	V
V_{IL}	Input low voltage		0		V_{th} – 0.1	V
I_{IH}	Input high current	V_{CC} = 2.625 V, V_{IH} = 2.625 V			10	µA
I_{IL}	Input low current	V_{CC} = 2.625 V, V_{IL} = 0 V			–10	µA
ΔV/ΔT	Input edge rate	20%–80%	1.5			V/ns
C_{IN}	Input capacitance			2.5		pF

Copyright © 2010–2011, Texas Instruments Incorporated

ELECTRICAL CHARACTERISTICS (continued)

At V_{CC} = 2.375V to 2.625V, T_A = –40°C to 85°C (unless otherwise noted)

PARAMETER		TEST CONDITIONS	MIN	TYP	MAX	UNIT
DIFFERENTIAL INPUT CHARACTERISTICS						
f_{IN}	Input frequency	Clock input			800	MHz
$V_{IN, DIFF}$	Differential input voltage peak-to-peak	V_{ICM} = 1.25 V	0.3		1.6	V_{PP}
V_{ICM}	Input common mode voltage range	$V_{IN, DIFF, PP}$ > 0.4 V	1.0		V_{CC} – 0.3	V
I_{IH}	Input high current	V_{CC} = 2.625 V, V_{IH} = 2.625 V			10	µA
I_{IL}	Input low current	V_{CC} = 2.625, V_{IL} = 0 V			–10	µA
ΔV/ΔT	Input edge rate	20%–80%	0.75			V/ns
C_{IN}	Input capacitance			2.5		pF
LVDS OUTPUT CHARACTERISTICS						
$\|V_{OD}\|$	Differential output voltage magnitude	$V_{IN, DIFF, PP}$ = 0.3V, R_L = 100 Ω	250		450	mV
ΔV_{OD}	Change in differential output voltage magnitude		–15		15	mV
$V_{OC(SS)}$	Steady-state common mode output voltage		1.1		1.375	V
$\Delta V_{OC(SS)}$	Steady-state common mode output voltage	$V_{IN, DIFF, PP}$ = 0.6V, R_L = 100 Ω	–15		15	mV
V_{ring}	Output overshoot and undershoot	Percentage of output amplitude V_{OD}			10%	
V_{OS}	Output ac common mode	$V_{IN, DIFF, PP}$ = 0.6V, R_L = 100 Ω		40	70	mV_{PP}
I_{OS}	Short-circuit output current	V_{OD} = 0 V			±24	mA
t_{PD}	Propagation delay	$V_{IN, DIFF, PP}$ = 0.3 V		1.5	2.5	ns
$t_{SK, PP}$	Part-to-part skew				600	ps
$t_{SK, O}$	Output skew				55	ps
$t_{SK,P}$	Pulse skew(with 50% duty cycle input)	Crossing-point-to-crossing-point distortion	–50		50	ps
t_{RJIT}	Random additive jitter (with 50% duty cycle input)	Edge speed 0.75 V/ns, 10 kHz – 20 MHz			0.3	ps, RMS
t_R/t_F	Output rise/fall time	20% to 80%, 100 Ω, 5 pF	50		300	ps
I_{CCSTAT}	Static supply current	Outputs unterminated, f = 0 Hz		17	28	mA
I_{CC100}	Supply current	All outputs, R_L = 100 Ω, f = 100 MHz		107	140	mA
I_{CC800}	Supply current	All outputs, R_L = 100 Ω, f = 800 MHz		147	180	mA
V_{AC_REF} CHARACTERISTICS						
V_{AC_REF}	Reference output voltage	V_{CC} = 2.5 V I_{load} = 100 µA	1.1	1.25	1.35	V

Copyright © 2010–2011, Texas Instruments Incorporated

Typical Additive Phase Noise Characteristics for 100 MHz Clock

PARAMETER		MIN	TYP	MAX	UNIT
phn_{100}	Phase noise at 100 Hz offset		-132.9		dBc/Hz
phn_{1k}	Phase noise at 1 kHz offset		-138.8		dBc/Hz
phn_{10k}	Phase noise at 10 kHz offset		-147.4		dBc/Hz
phn_{100k}	Phase noise at 100 kHz offset		-153.6		dBc/Hz
phn_{1M}	Phase noise at 1 MHz offset		-155.2		dBc/Hz
phn_{10M}	Phase noise at 10 MHz offset		-156.2		dBc/Hz
phn_{20M}	Phase noise at 20 MHz offset		-156.6		dBc/Hz
t_{RJIT}	Random additive jitter from 10 kHz to 20 MHz		171		fs, RMS

Typical Additive Phase Noise Characteristics for 737.27 MHz Clock

PARAMETER		MIN	TYP	MAX	UNIT
phn_{100}	Phase noise at 100 Hz offset		-80.2		dBc/Hz
phn_{1k}	Phase noise at 1 kHz offset		-114.3		dBc/Hz
phn_{10k}	Phase noise at 10 kHz offset		-138		dBc/Hz
phn_{100k}	Phase noise at 100 kHz offset		-143.9		dBc/Hz
phn_{1M}	Phase noise at 1 MHz offset		-145.2		dBc/Hz
phn_{10M}	Phase noise at 10 MHz offset		-146.5		dBc/Hz
phn_{20M}	Phase noise at 20 MHz offset		-146.6		dBc/Hz
t_{RJIT}	Random additive jitter from 10 kHz to 20 MHz		65		fs, RMS

Copyright © 2010–2011, Texas Instruments Incorporated

TYPICAL CHARACTERISTICS

INPUT- AND OUTPUT-CLOCK PHASE NOISES vs FREQUENCY FROM the CARRIER (T_A = 25°C and V_{CC} = 2.5V)

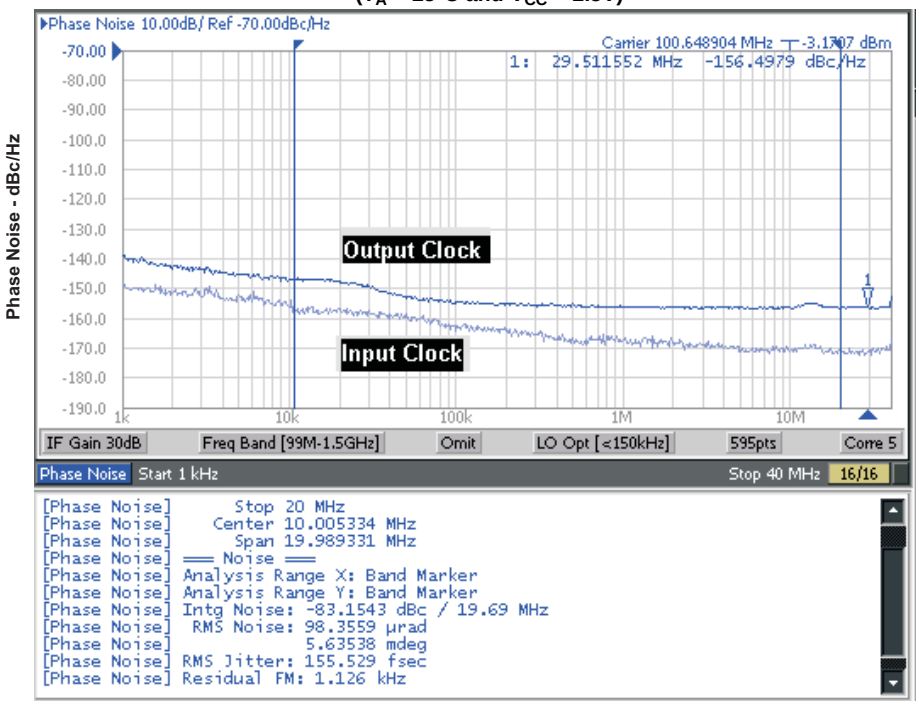

Input clock RMS jitter is 32 fs from 10 kHz to 20 MHz and additive RMS jitter is 152 fs

Figure 3. 100 MHz Input and Output Phase Noise Plot

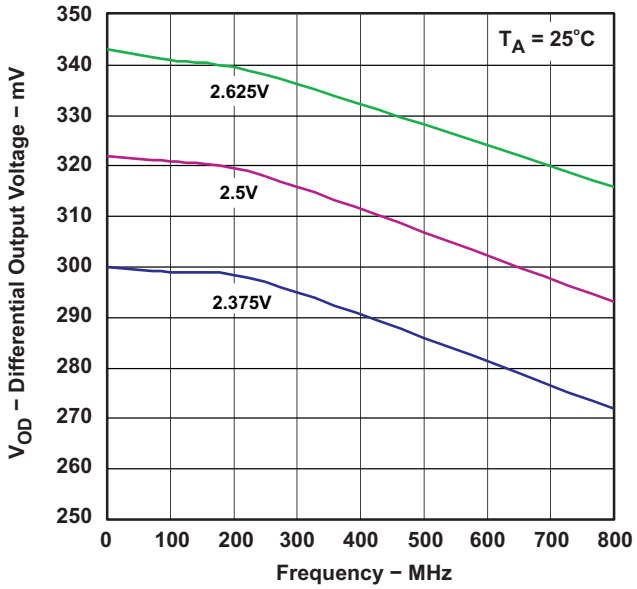

Figure 4. Differential Output Voltage vs Frequency

TYPICAL CHARACTERISTICS (continued)

TEST CONFIGURATIONS

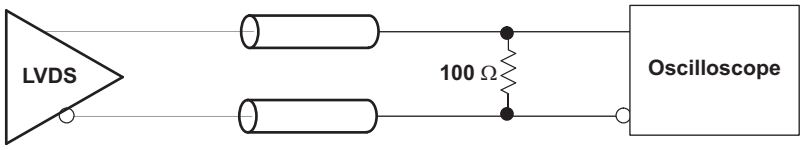

Figure 5. LVDS Output DC Configuration During Device Test

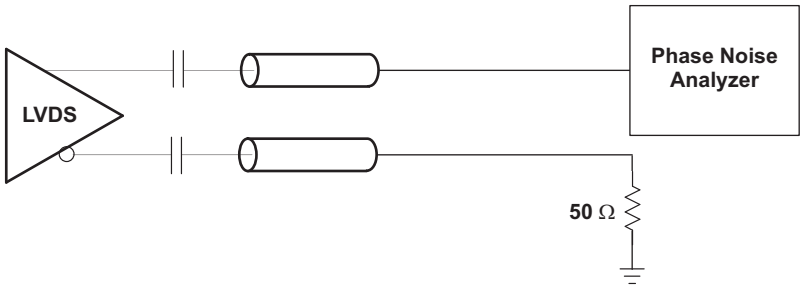

Figure 6. LVDS Output AC Configuration During Device Test

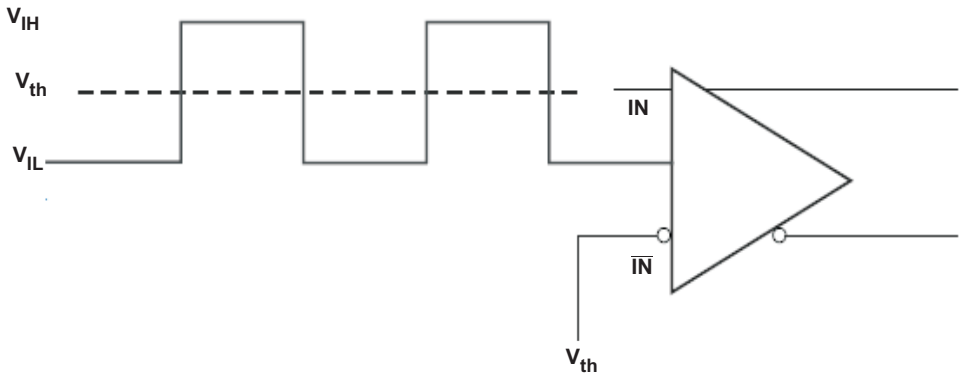

Figure 7. DC Coupled LVCMOS Input During Device Test

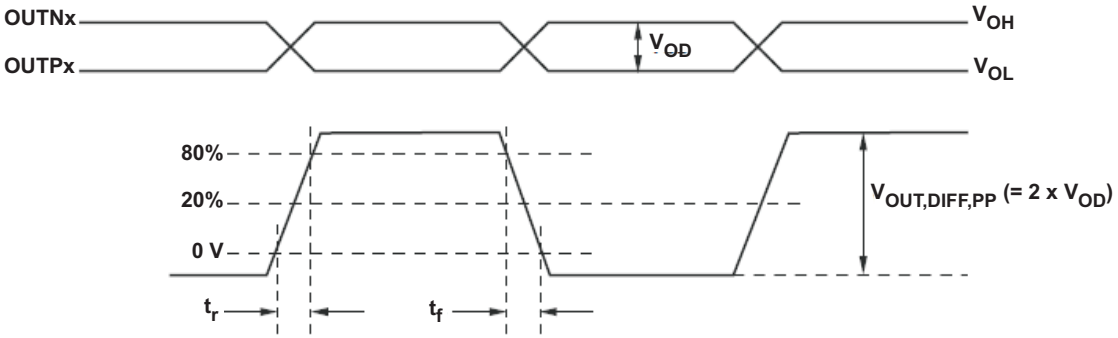

Figure 8. Output Voltage and Rise/Fall Time

Copyright © 2010–2011, Texas Instruments Incorporated

TYPICAL CHARACTERISTICS (continued)

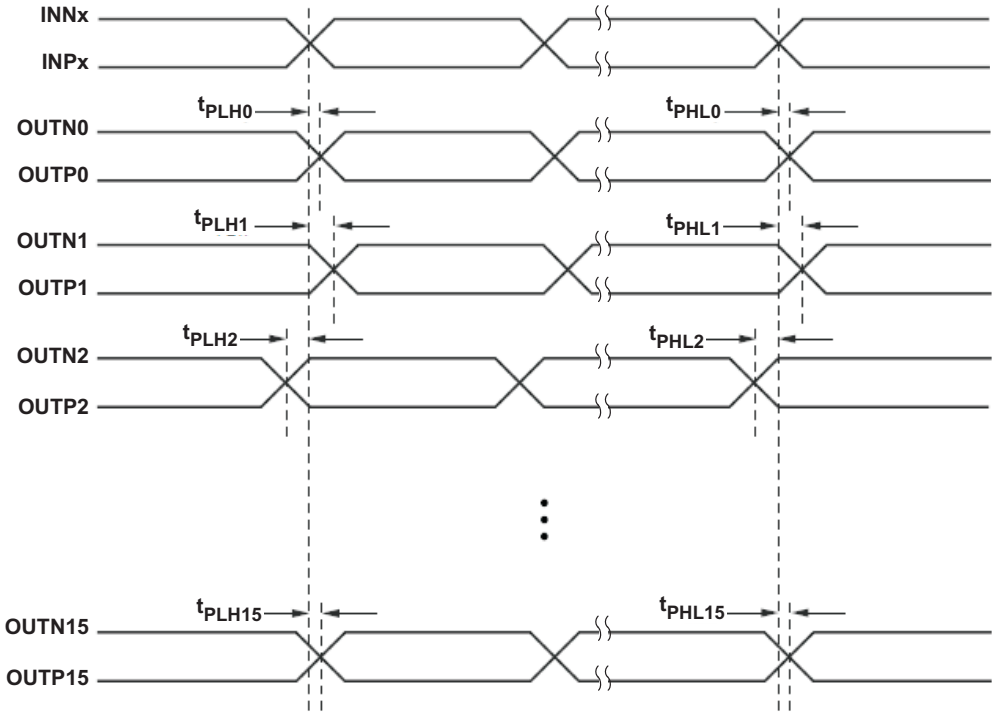

A. Output skew is calculated as the greater of the following: As of the difference between the fastest and the slowest t_{PLHn} or the difference between the fastest and the slowest t_{PHLn} (n = 0, 1, 2, ..15)

B. Part to part skew is calculated as the greater of the following: As the difference between the fastest and the slowest t_{PLHn} or the difference between the fastest and the slowest t_{PHLn} across multiple devices (n = 0, 1, 2, ..15)

Figure 9. Output Skew and Part-to-Part Skew

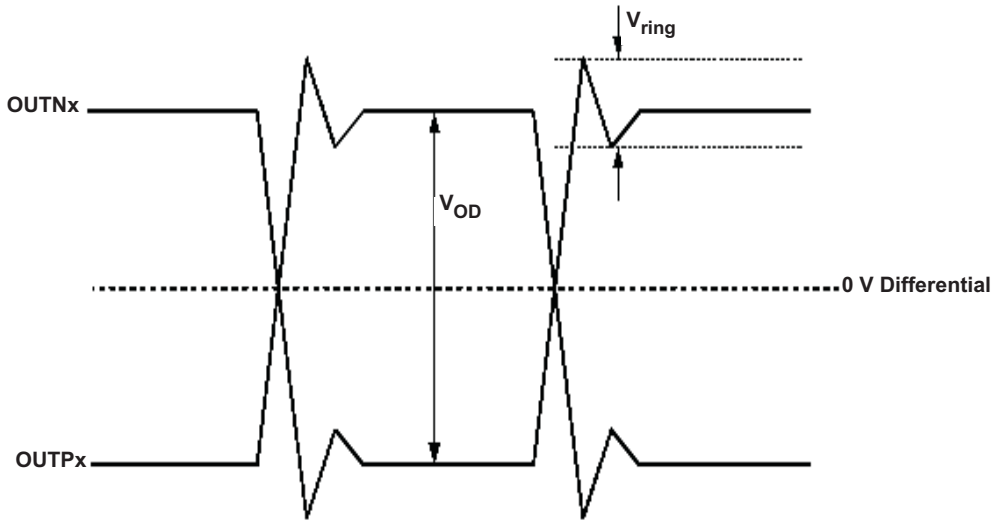

Figure 10. Output Overshoot and Undershoot

TYPICAL CHARACTERISTICS (continued)

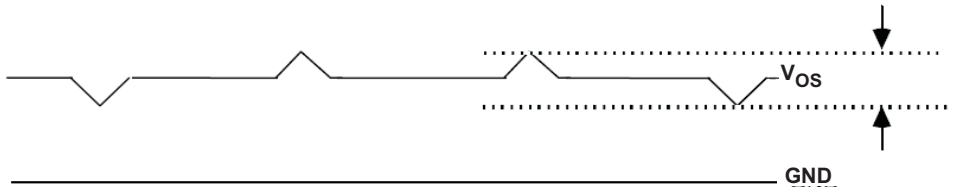

Figure 11. Output AC Common Mode

APPLICATION INFORMATION

THERMAL MANAGEMENT

For reliability and performance reasons, the die temperature should be limited to a maximum of +125°C.

The device package has an exposed pad that provides the primary heat removal path to the printed circuit board (PCB). To maximize the heat dissipation from the package, a thermal landing pattern including multiple vias to a ground plane must be incorporated into the PCB within the footprint of the package. The thermal pad must be soldered down to ensure adequate heat conduction to of the package. Check the mechanical data at the end of the data sheet for land and via pattern examples.

POWER SUPPLY FILTERING

High-performance clock buffers are sensitive to noise on the power supply, which can dramatically increase the additive jitter of the buffer. Thus, it is essential to reduce noise from the system power supply, especially when jitter/phase noise is critical to the application.

Filter capacitors are used to eliminate the low-frequency noise from the power supply, where the bypass capacitors provide the low impedance path for high-frequency noise and guard the power-supply system against the induced fluctuations. These bypass capacitors also provide instantaneous current surges as required by the device and should have low equivalent series resistance (ESR). To properly use the bypass capacitors, they must be placed close to the power-supply pins and laid out with short loops to minimize inductance. It is recommended to add as many high-frequency (for example, 0.1 µF) bypass capacitors as there are supply pins in the package. It is recommended, but not required, to insert a ferrite bead between the board power supply and the chip power supply that isolates the high-frequency switching noises generated by the clock driver; these beads prevent the switching noise from leaking into the board supply. Choose an appropriate ferrite bead with low dc resistance because it is imperative to provide adequate isolation between the board supply and the chip supply, as well as to maintain a voltage at the supply pins that is greater than the minimum voltage required for proper operation.

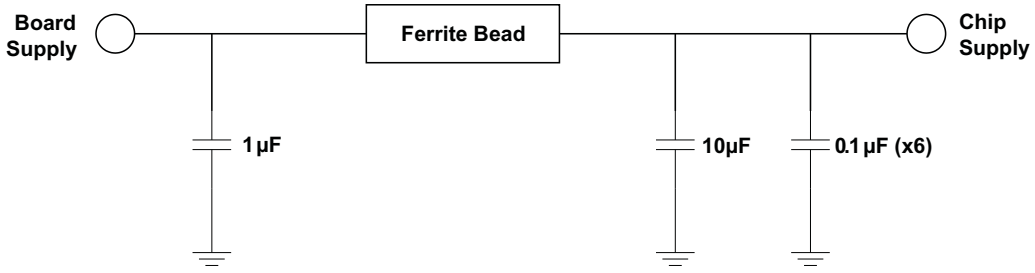

Figure 12. Power Supply Filtering

Copyright © 2010–2011, Texas Instruments Incorporated

LVDS OUTPUT TERMINATION

The proper LVDS termination for signal integrity over two 50 Ω lines is 100 Ω between the outputs on the receiver end. Either dc-coupled termination or ac-coupled termination can be used for LVDS outputs. It is recommended to place termination resister close to the receiver. If the receiver is internally biased to a voltage different than the output common mode voltage of the CDCLVD1216, ac-coupling should be used. If the LVDS receiver has internal 100 Ω termination, external termination must be omitted.

Unused outputs can be left open without connecting any trace to the output pins.

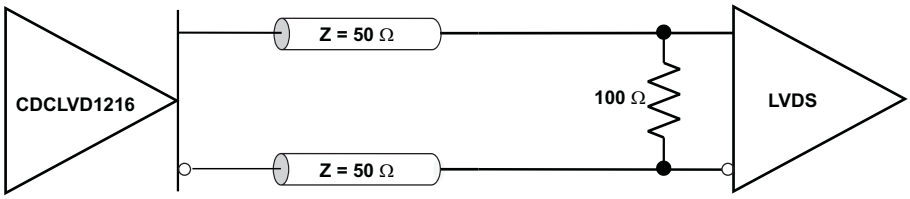

Figure 13. LVDS Output DC Termination

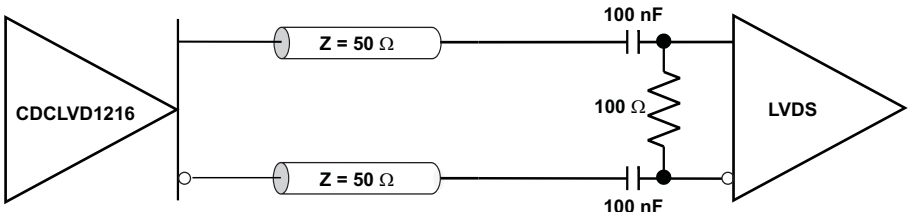

Figure 14. LVDS Output AC Termination with Receiver Internally Biased

Copyright © 2010–2011, Texas Instruments Incorporated

INPUT TERMINATION

The CDCLVD1216 inputs can be interfaced with LVDS, LVPECL, or LVCMOS drivers.

LVDS Driver can be connected to CDCLVD1216 inputs with dc or ac coupling as shown Figure 15 and Figure 16 respectively.

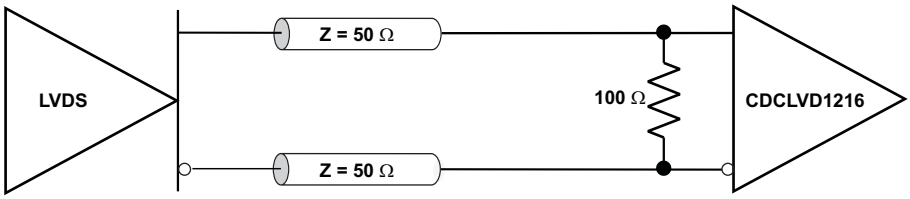

Figure 15. LVDS Clock Driver Connected to CDCLVD1216 Input (DC coupled)

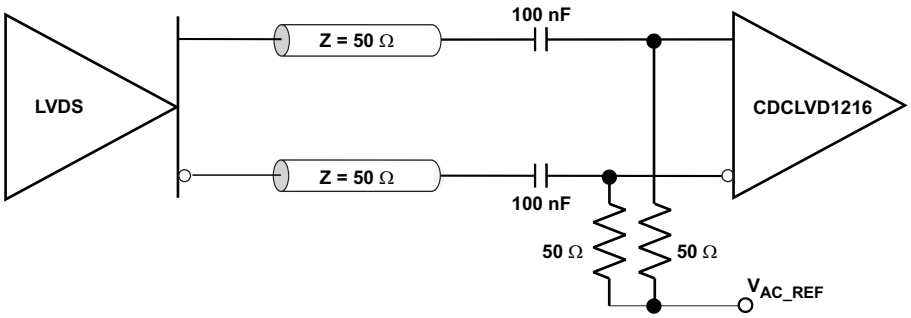

Figure 16. LVDS Clock Driver Connected to CDCLVD1216 Input (AC coupled)

Figure 17 shows how to connect LVPECL inputs to the CDCLVD1216. The series resistors are required to reduce the LVPECL signal swing if the signal swing is >1.6 V_{PP}.

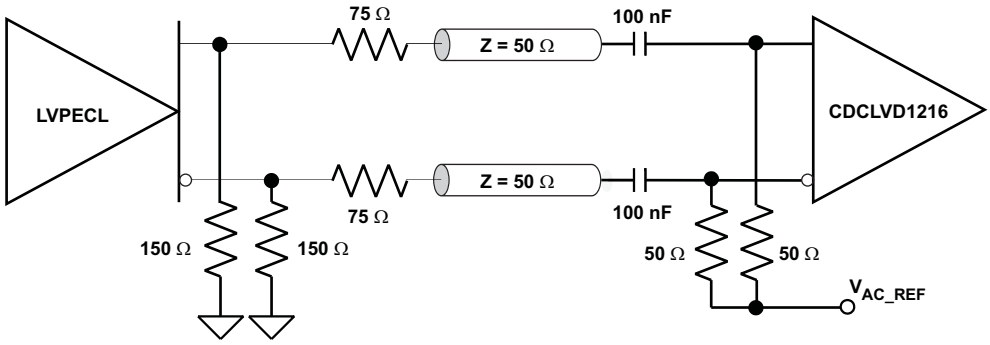

Figure 17. LVPECL Clock Driver Connected to CDCLVD1216 Input

Copyright © 2010–2011, Texas Instruments Incorporated

Figure 18 illustrates how to couple a 2.5 V LVCMOS clock input to the CDCLVD1216 directly. The series resistance (R_S) should be placed close to the LVCMOS driver if needed. 3.3 V LVCMOS clock input swing needs to be limited to $V_{IH} \leq V_{CC}$.

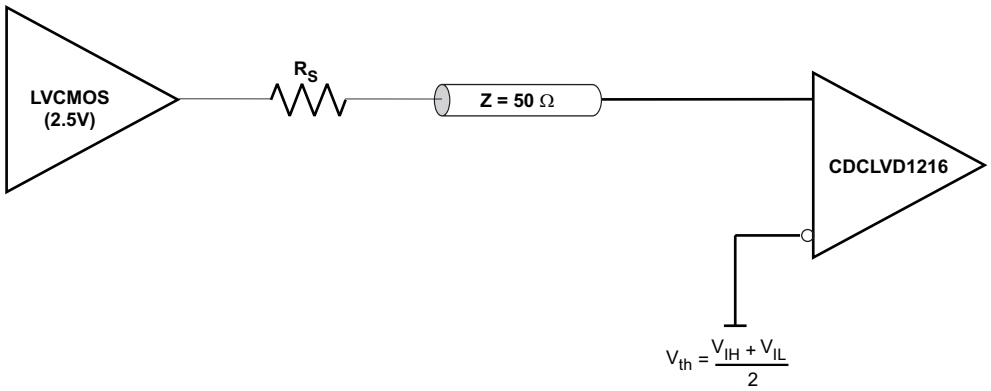

Figure 18. 2.5V LVCMOS Clock Driver Connected to CDCLVD1216 Input

For unused inputs, it is recommended to ground both input pins (INP, INN) using 1 kΩ resistors.

REVISION HISTORY

Changes from Original (October 2010) to Revision A	Page
• Changed Feature - Low Output Skew of 45 ps (Max) To: Low Output Skew of 55 ps (Max)	1
• Changed $t_{SK,\ O}$ Output Skew From: 45 ps (Max) To: 55 ps (Max)	5
• Deleted the Recommended PCB Layout illustration	10

Changes from Revision A (November 2010) to Revision B	Page
• Changed the device status From: Product Preview To: Production	1

PACKAGING INFORMATION

Orderable Device	Status (1)	Package Type	Package Drawing	Pins	Package Qty	Eco Plan (2)	Lead/Ball Finish (6)	MSL Peak Temp (3)	Op Temp (°C)	Device Marking (4/5)	Samples
CDCLVD1216RGZR	ACTIVE	VQFN	RGZ	48	2500	Green (RoHS & no Sb/Br)	NIPDAU	Level-3-260C-168 HR	-40 to 85	CDCLVD 1216	Samples
CDCLVD1216RGZT	ACTIVE	VQFN	RGZ	48	250	Green (RoHS & no Sb/Br)	NIPDAU	Level-3-260C-168 HR	-40 to 85	CDCLVD 1216	Samples

(1) The marketing status values are defined as follows:
ACTIVE: Product device recommended for new designs.
LIFEBUY: TI has announced that the device will be discontinued, and a lifetime-buy period is in effect.
NRND: Not recommended for new designs. Device is in production to support existing customers, but TI does not recommend using this part in a new design.
PREVIEW: Device has been announced but is not in production. Samples may or may not be available.
OBSOLETE: TI has discontinued the production of the device.

(2) **RoHS:** TI defines "RoHS" to mean semiconductor products that are compliant with the current EU RoHS requirements for all 10 RoHS substances, including the requirement that RoHS substance do not exceed 0.1% by weight in homogeneous materials. Where designed to be soldered at high temperatures, "RoHS" products are suitable for use in specified lead-free processes. TI may reference these types of products as "Pb-Free".
RoHS Exempt: TI defines "RoHS Exempt" to mean products that contain lead but are compliant with EU RoHS pursuant to a specific EU RoHS exemption.
Green: TI defines "Green" to mean the content of Chlorine (Cl) and Bromine (Br) based flame retardants meet JS709B low halogen requirements of <=1000ppm threshold. Antimony trioxide based flame retardants must also meet the <=1000ppm threshold requirement.

(3) MSL, Peak Temp. - The Moisture Sensitivity Level rating according to the JEDEC industry standard classifications, and peak solder temperature.

(4) There may be additional marking, which relates to the logo, the lot trace code information, or the environmental category on the device.

(5) Multiple Device Markings will be inside parentheses. Only one Device Marking contained in parentheses and separated by a "~" will appear on a device. If a line is indented then it is a continuation of the previous line and the two combined represent the entire Device Marking for that device.

(6) Lead/Ball Finish - Orderable Devices may have multiple material finish options. Finish options are separated by a vertical ruled line. Lead/Ball Finish values may wrap to two lines if the finish value exceeds the maximum column width.

Important Information and Disclaimer: The information provided on this page represents TI's knowledge and belief as of the date that it is provided. TI bases its knowledge and belief on information provided by third parties, and makes no representation or warranty as to the accuracy of such information. Efforts are underway to better integrate information from third parties. TI has taken and continues to take reasonable steps to provide representative and accurate information but may not have conducted destructive testing or chemical analysis on incoming materials and chemicals. TI and TI suppliers consider certain information to be proprietary, and thus CAS numbers and other limited information may not be available for release.

In no event shall TI's liability arising out of such information exceed the total purchase price of the TI part(s) at issue in this document sold by TI to Customer on an annual basis.

TAPE AND REEL INFORMATION

REEL DIMENSIONS

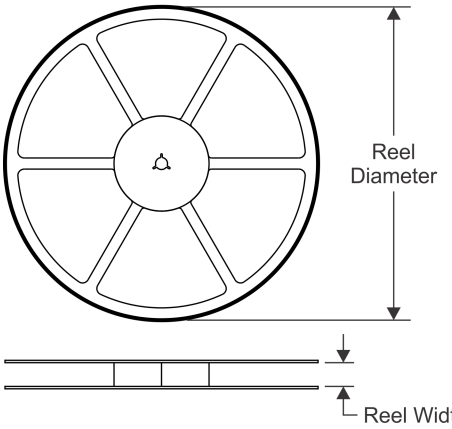

TAPE DIMENSIONS

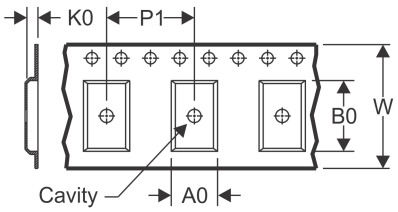

A0	Dimension designed to accommodate the component width
B0	Dimension designed to accommodate the component length
K0	Dimension designed to accommodate the component thickness
W	Overall width of the carrier tape
P1	Pitch between successive cavity centers

QUADRANT ASSIGNMENTS FOR PIN 1 ORIENTATION IN TAPE

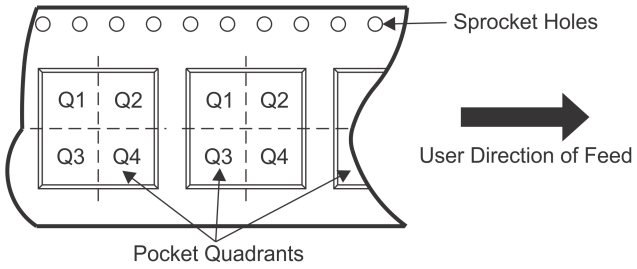

*All dimensions are nominal

Device	Package Type	Package Drawing	Pins	SPQ	Reel Diameter (mm)	Reel Width W1 (mm)	A0 (mm)	B0 (mm)	K0 (mm)	P1 (mm)	W (mm)	Pin1 Quadrant
CDCLVD1216RGZR	VQFN	RGZ	48	2500	330.0	16.4	7.3	7.3	1.5	12.0	16.0	Q2
CDCLVD1216RGZT	VQFN	RGZ	48	250	180.0	16.4	7.3	7.3	1.5	12.0	16.0	Q2

TAPE AND REEL BOX DIMENSIONS

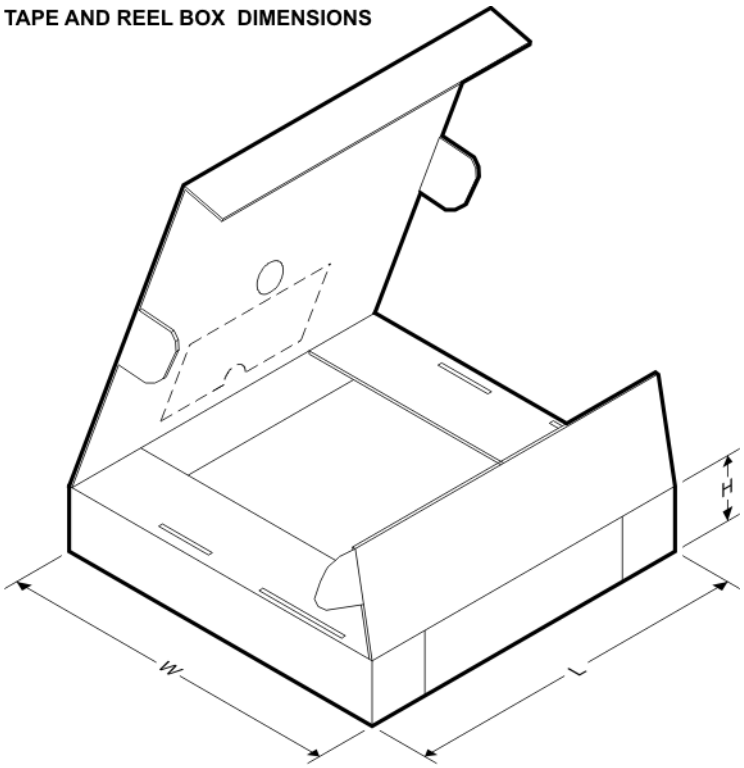

*All dimensions are nominal

Device	Package Type	Package Drawing	Pins	SPQ	Length (mm)	Width (mm)	Height (mm)
CDCLVD1216RGZR	VQFN	RGZ	48	2500	350.0	350.0	43.0
CDCLVD1216RGZT	VQFN	RGZ	48	250	213.0	191.0	55.0

GENERIC PACKAGE VIEW

RGZ 48

VQFN - 1 mm max height

7 x 7, 0.5 mm pitch

PLASTIC QUADFLAT PACK- NO LEAD

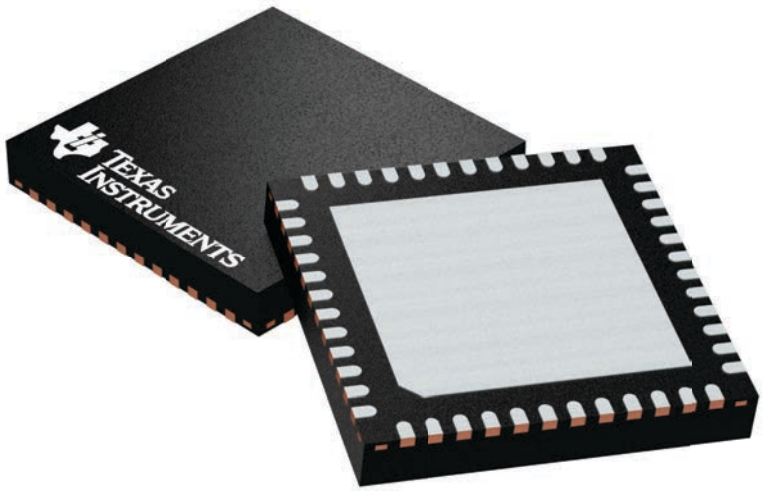

Images above are just a representation of the package family, actual package may vary.
Refer to the product data sheet for package details.

4224671/A

RGZ0048B

PACKAGE OUTLINE

VQFN - 1 mm max height

PLASTIC QUAD FLATPACK - NO LEAD

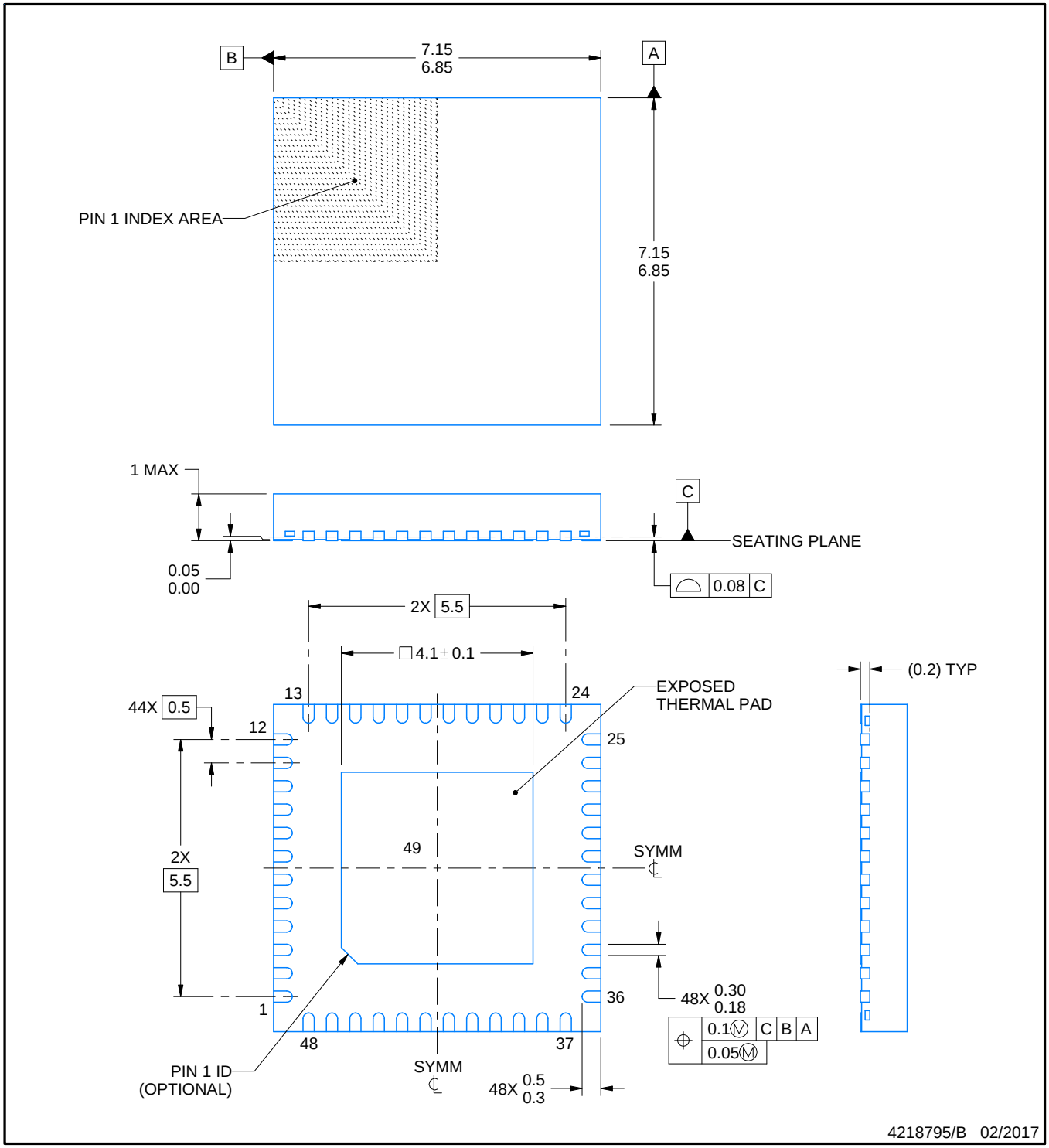

NOTES:

1. All linear dimensions are in millimeters. Any dimensions in parenthesis are for reference only. Dimensioning and tolerancing per ASME Y14.5M.
2. This drawing is subject to change without notice.
3. The package thermal pad must be soldered to the printed circuit board for thermal and mechanical performance.

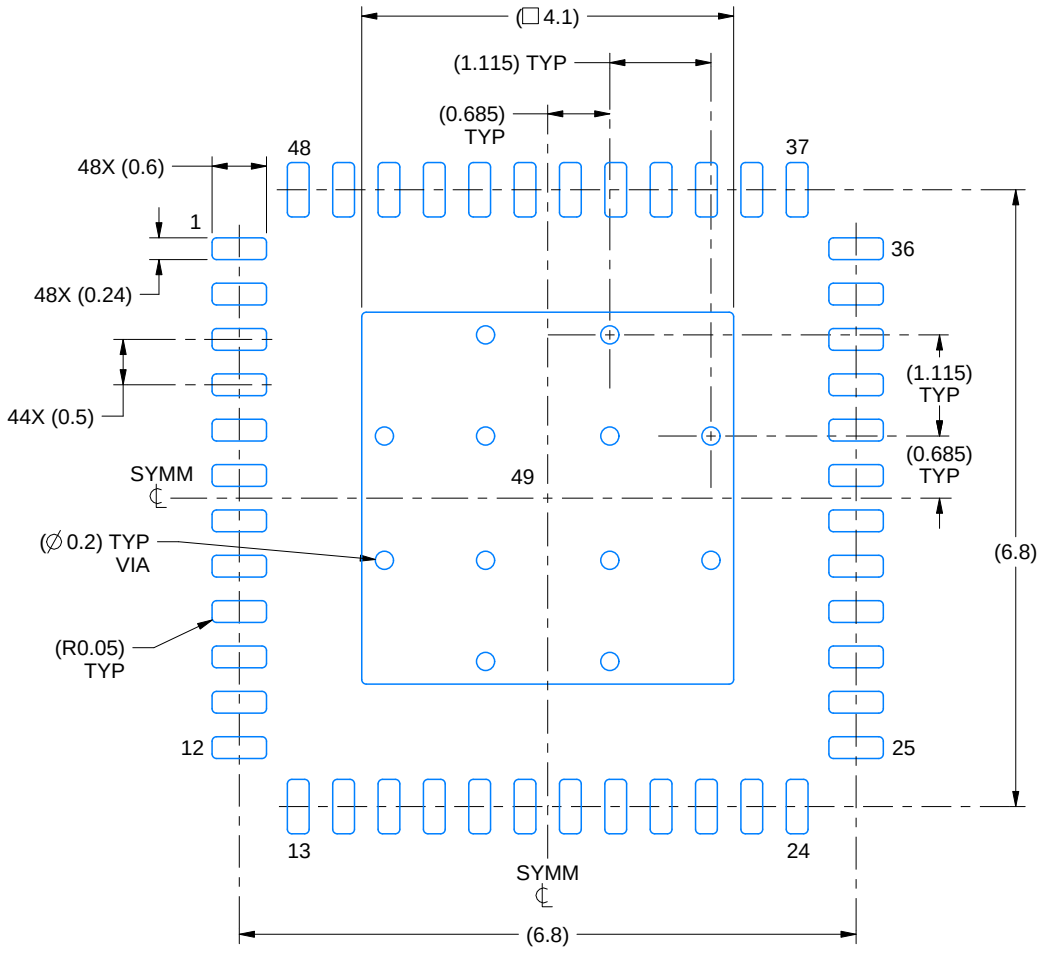

LAND PATTERN EXAMPLE
EXPOSED METAL SHOWN
SCALE:12X

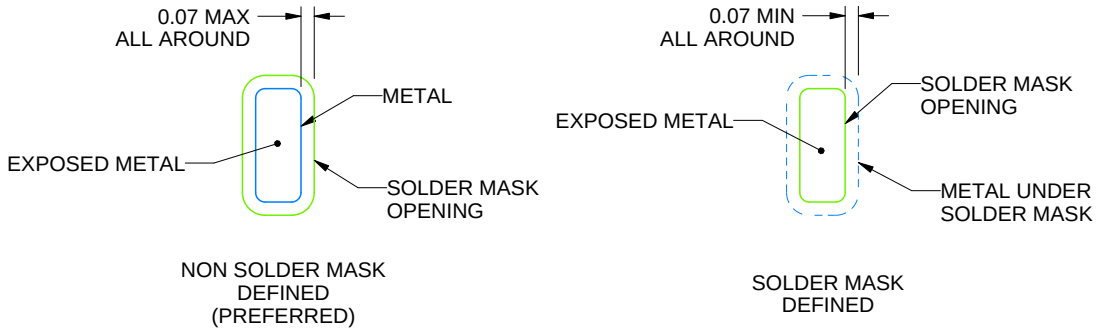

SOLDER MASK DETAILS

4218795/B 02/2017

NOTES: (continued)

4. This package is designed to be soldered to a thermal pad on the board. For more information, see Texas Instruments literature number SLUA271 (www.ti.com/lit/slua271).
5. Vias are optional depending on application, refer to device data sheet. If any vias are implemented, refer to their locations shown on this view. It is recommended that vias under paste be filled, plugged or tented.

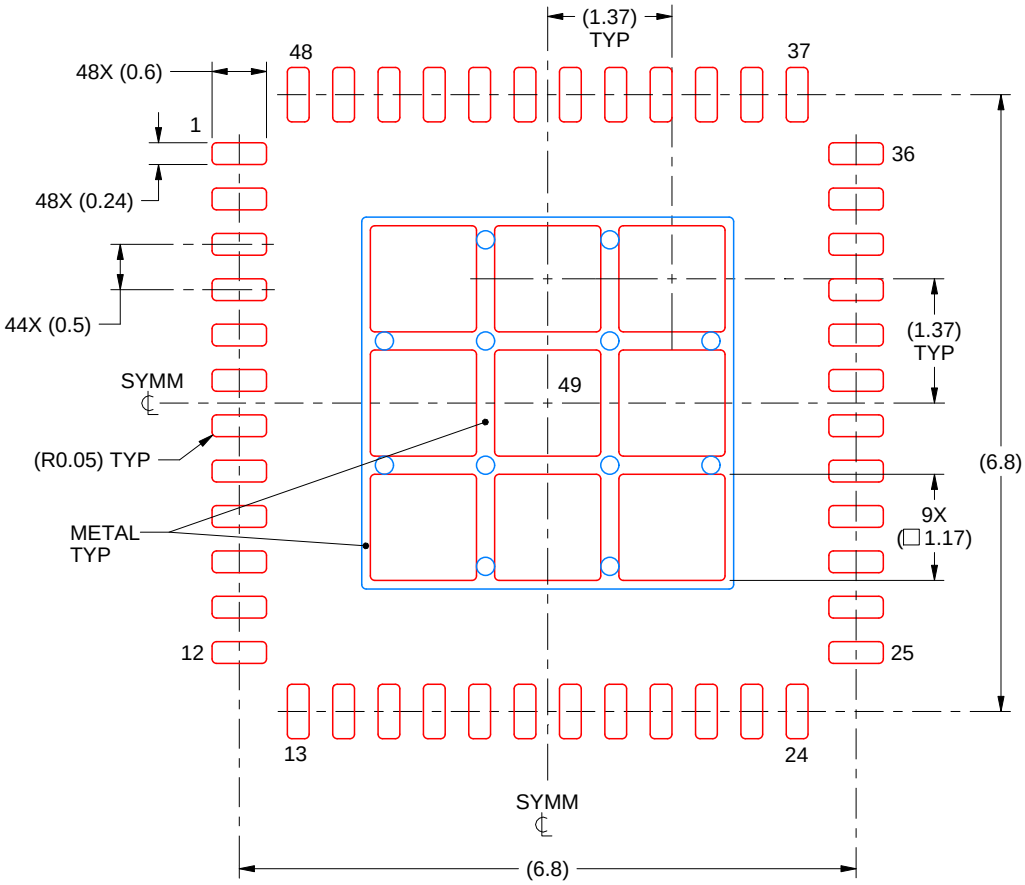

SOLDER PASTE EXAMPLE
BASED ON 0.125 mm THICK STENCIL

EXPOSED PAD 49
73% PRINTED SOLDER COVERAGE BY AREA UNDER PACKAGE
SCALE:12X

4218795/B 02/2017

NOTES: (continued)

6. Laser cutting apertures with trapezoidal walls and rounded corners may offer better paste release. IPC-7525 may have alternate design recommendations.

IMPORTANT NOTICE AND DISCLAIMER

TI PROVIDES TECHNICAL AND RELIABILITY DATA (INCLUDING DATASHEETS), DESIGN RESOURCES (INCLUDING REFERENCE DESIGNS), APPLICATION OR OTHER DESIGN ADVICE, WEB TOOLS, SAFETY INFORMATION, AND OTHER RESOURCES “AS IS” AND WITH ALL FAULTS, AND DISCLAIMS ALL WARRANTIES, EXPRESS AND IMPLIED, INCLUDING WITHOUT LIMITATION ANY IMPLIED WARRANTIES OF MERCHANTABILITY, FITNESS FOR A PARTICULAR PURPOSE OR NON-INFRINGEMENT OF THIRD PARTY INTELLECTUAL PROPERTY RIGHTS.

These resources are intended for skilled developers designing with TI products. You are solely responsible for (1) selecting the appropriate TI products for your application, (2) designing, validating and testing your application, and (3) ensuring your application meets applicable standards, and any other safety, security, or other requirements. These resources are subject to change without notice. TI grants you permission to use these resources only for development of an application that uses the TI products described in the resource. Other reproduction and display of these resources is prohibited. No license is granted to any other TI intellectual property right or to any third party intellectual property right. TI disclaims responsibility for, and you will fully indemnify TI and its representatives against, any claims, damages, costs, losses, and liabilities arising out of your use of these resources.

TI’s products are provided subject to TI’s Terms of Sale (www.ti.com/legal/termsofsale.html) or other applicable terms available either on ti.com or provided in conjunction with such TI products. TI’s provision of these resources does not expand or otherwise alter TI’s applicable warranties or warranty disclaimers for TI products.

Mailing Address: Texas Instruments, Post Office Box 655303, Dallas, Texas 75265
Copyright © 2020, Texas Instruments Incorporated