CDBMT220L-HF Thru. CDBMT240L-HF

Reverse Voltage: 20 to 40 Volts
Forward Current: 2.0 Amp
RoHS Device
Halogen Free

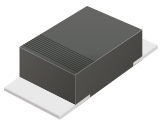

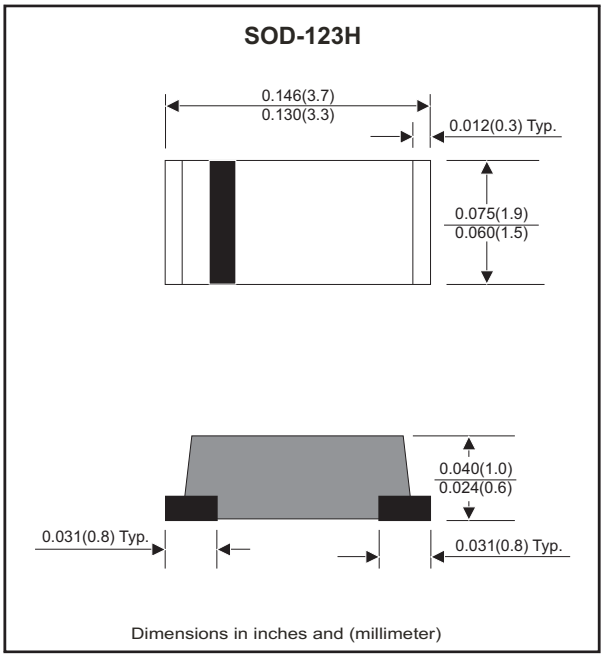

Features

-Excellent power dissipation offers better reverse leakage current and thermal resistance.
-Low profile package is 40% thinner than standards SOD-123.
-Low power loss,high efficiency.
-High current capability,low forward voltage drop.
-High surge capability.
-Guarding for overvoltage protection.
-Ultra high-speed switching.
-Silicon epitaxial planar chip,metal silicon junction.
-Lead-free part meets environmental standards of MIL-STD-19500/228

Mechanical data

-Epoxy: UL94-V0 rated flame retardant.
-Case: Molded plastic, SOD-123H/MINI SMA
-Terminals: Solderable per MIL-STD-750, method 2026.
-Polarity: Indicated by cathode band.
-Mounting Position: any
-Weight: 0.011 grams approx.

Maximum Ratings and Electrical Characteristics

Parameter	Symbol	CDBMT220L-HF	CDBMT230L-HF	CDBMT240L-HF	Units
Max. Repetitive Peak Reverse Voltage	V_{RRM}	20	30	40	V
Continuous Reverse Voltage	V_R	20	30	40	V
Max. RMS Voltage	V_{RMS}	14	21	28	V
Max. Forward Surge Current 8.3mssingle half sine-wave superimposed on rate load (JEDEC method)	I_{FSM}	40			A
Max. Forward Rectified Current (fig.2)	I_O	2.0			A
Max. Forward Voltage @I_F=2.0A	V_F	0.38	0.40	0.40	V
Max. Reverse Current at T_A=25°C	I_R	1.0			mA
Typ. Thermal Resistance Junction to Ambient	$R_{\theta JA}$	70			°C/W
Typ. Diode Junction Capacitance f=1MHz and applied 4V DC reverse voltage	C_J	160			pF
Storage Temperature	T_{STG}	-65 to +175			°C
Operating Temperature	T_J	-55 to +100			°C

RATING AND CHARACTERISTIC CURVES (CDBMT220L-HF thru CDBMT240L-HF)

Fig.1 - Typical Forward Characteristics

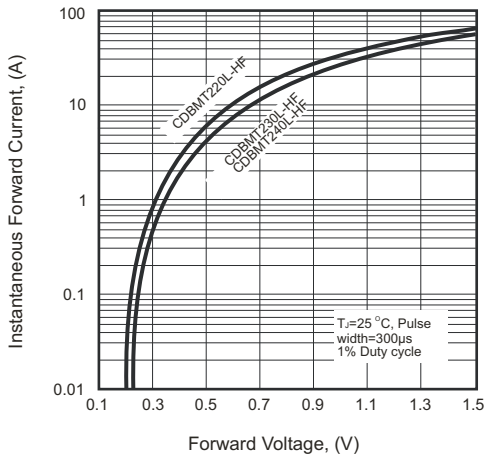

Fig.2 - Typical Forward Current Derating Curve

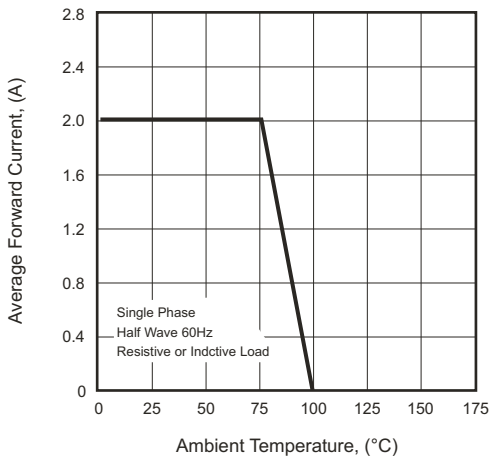

Fig.3 - Typical Revrse Characteristics

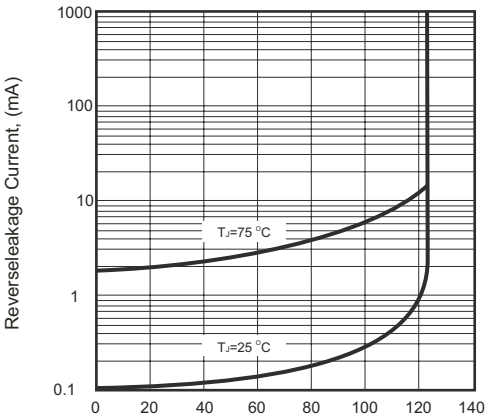

Fig.4 - Maximum Non-repetitive Forward Surge Current

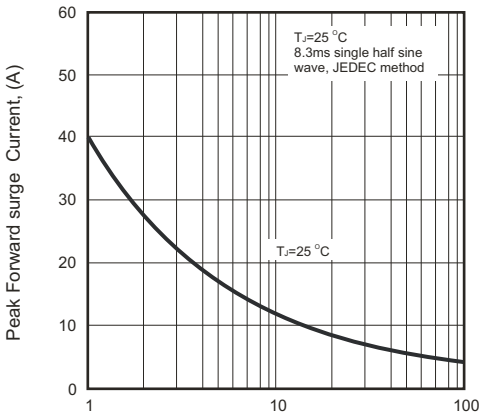

Fig.5 - Typical Junction Capacitance

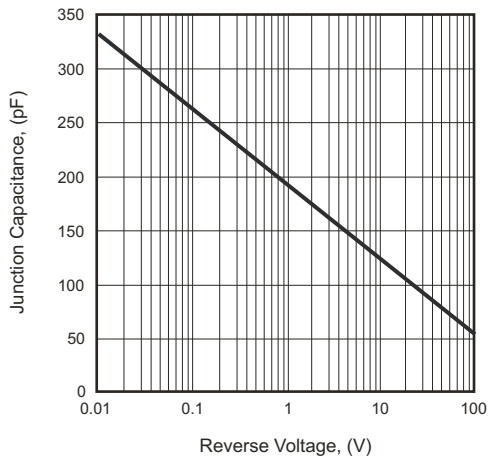

Reel Taping Specification

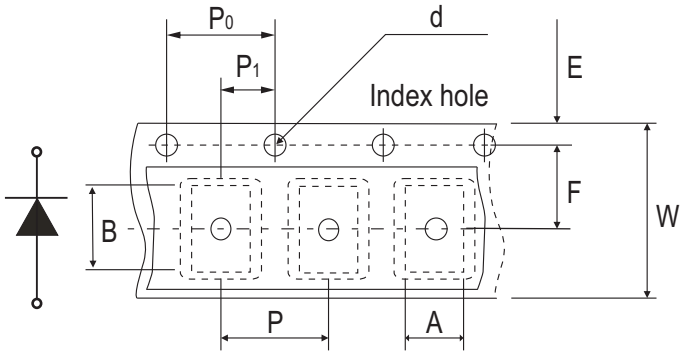

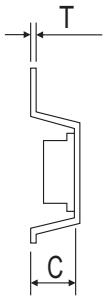

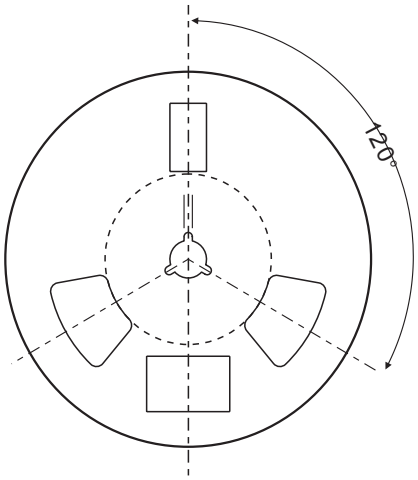

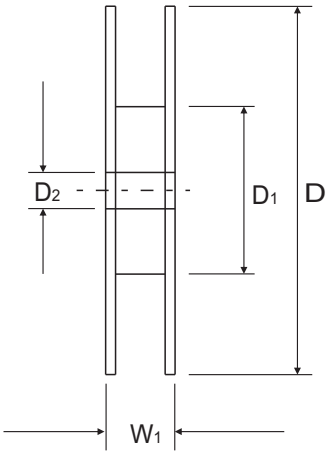

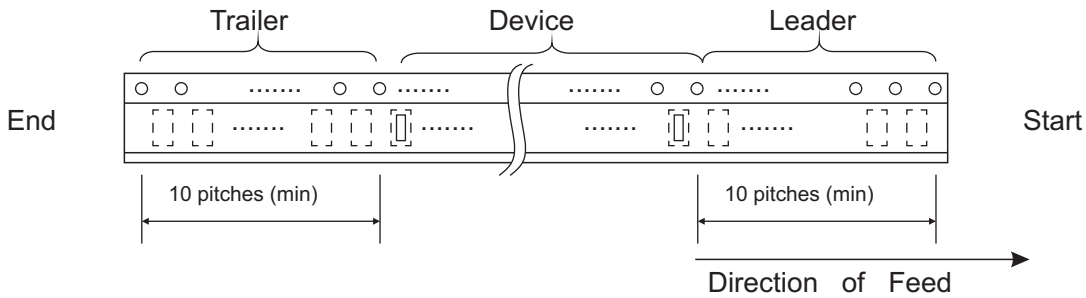

	SYMBOL	A	B	C	d	D	D1	D2
Mini-SMA/SOD-123	(mm)	2.00 ± 0.10	3.85 ± 0.10	1.10 ± 0.10	1.50 ± 0.10	178 ± 2.00	62.0 MIN.	13.0 ± 0.50
	(inch)	0.079 ± 0.004	0.152 ± 0.004	0.043 ± 0.004	0.059 ± 0.004	7.00 ± 0.079	2.440 MIN.	0.512 ± 0.020

	SYMBOL	E	F	P	P0	P1	T	W	W1
Mini-SMA/SOD-123	(mm)	1.75 ± 0.10	3.50 ± 0.10	4.00 ± 0.10	4.00 ± 0.10	2.00 ± 0.10	0.23 ± 0.10	8.00 ± 0.30	11.40 ± 1.0
	(inch)	0.069 ± 0.004	0.138 ± 0.004	0.157 ± 0.004	0.157 ± 0.004	0.079 ± 0.004	0.009 ± 0.004	0.314 ± 0.012	0.449 ± 0.039

Marking Code

Part Number	Marking Code
CDBMT220L-HF	L22
CDBMT230L-HF	L23
CDBMT240L-HF	L24



Suggested PAD Layout

SIZE	Mini-SMA/SOD-123	
	(mm)	(inch)
A	3.00	0.118
B	1.30	0.051
C	1.80	0.071
D	4.30	0.169
E	1.70	0.067

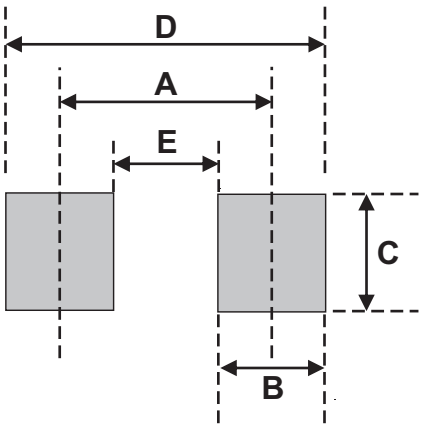

Standard Packaging

Case Type	REEL PACK	
	REEL (pcs)	Reel Size (inch)
Mini-SMA/SOD-123	3,000	7