CDBA220-HF Thru. CDBA2100-HF

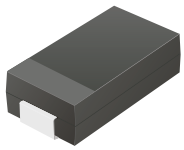

Reverse Voltage: 20 to 100 Volts
Forward Current: 2.0 Amp
RoHS Device
Halogen Free

Features

-Ideal for surface mount applications.

-Easy pick and place.

-Plastic package has Underwriters Lab. flammability classification 94V-0.

-Built-in strain relief.

-Low forward voltage drop.

Mechanical data

-Case: JEDEC DO-214AC, molded plastic.

-Terminals: solderable per MIL-STD-750, method 2026.

-Polarity: Color band denotes cathode end.

-Approx. weight: 0.064 grams

DO-214AC (SMA)

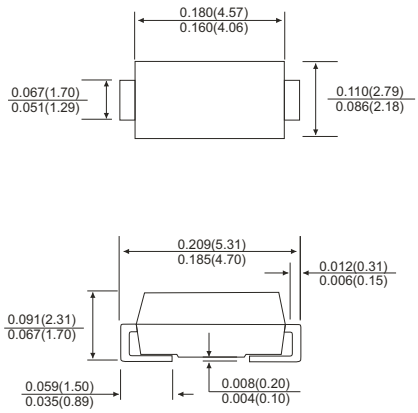

Dimensions in inches and (millimeter)

Maximum Ratings and Electrical Characteristics

Parameter	Symbol	CDBA 220-HF	CDBA 240-HF	CDBA 260-HF	CDBA 280-HF	CDBA 2100-HF	Units
Max. repetitive peak reverse voltage	V_{RRM}	20	40	60	80	100	V
Max. DC blocking voltage	V_{DC}	20	40	60	80	100	V
Max. RMS voltage	V_{RMS}	14	28	42	56	70	V
Peak surge forward current, 8.3ms single half sine-wave superimposed on rate load (JEDEC method)	I_{FSM}	50					A
Max. average forward current	I_O	2.0					A
Max. instantaneous forward voltage at 2.0A	V_F	0.50		0.70	0.85		V
Max. DC reverse current at T_A=25°C rated DC blocking voltage T_A=100°C	I_R	0.5 10					mA
Max. thermal resistance (Note 1)	$R_{\theta JA}$ $R_{\theta JL}$	75 17					°C/W
Max. operating junction temperature	T_J	125					°C
Storage temperature	T_{STG}	-65 to +150					°C

Notes: 1. Thermal resistance from junction to ambient and junction to lead mounted on P.C.B. with 5.0×5.0 mm copper pad area.

RATING AND CHARACTERISTIC CURVES (CDBA220-HF thru. CDBA2100-HF)

Fig.1 Reverse Characteristics

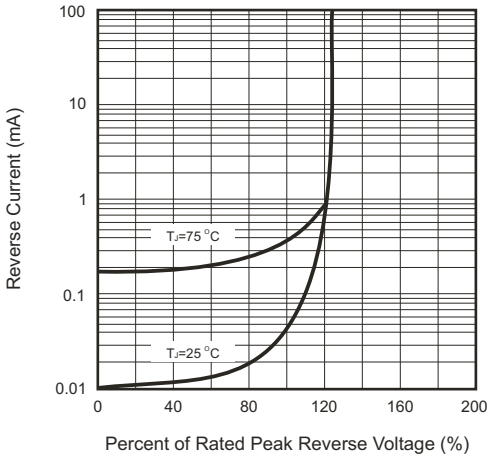

Fig.2 Forward Characteristics

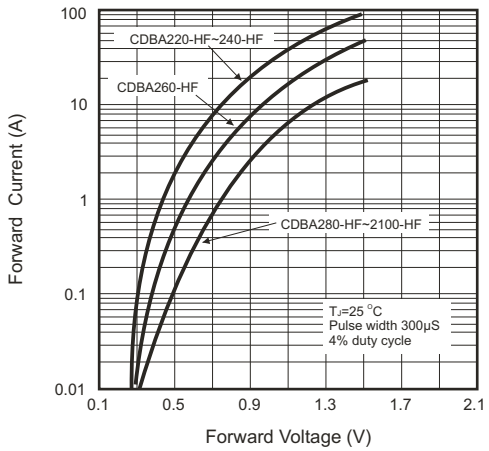

Fig.3 Junction Capacitance

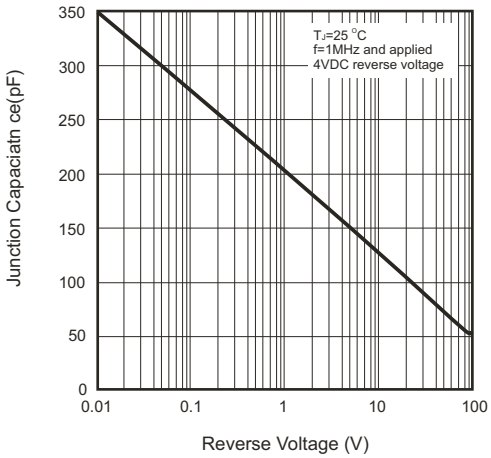

Fig.4 Current Derating Curve

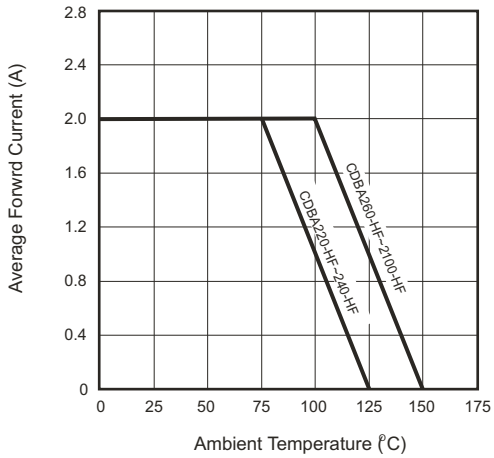

Fig.5 Non-repetitive Forward Surge Current

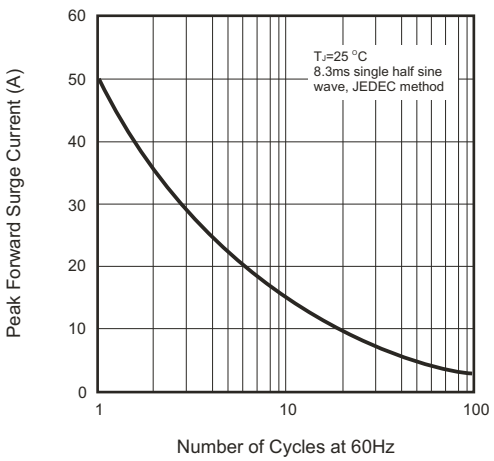

Reel Taping Specification

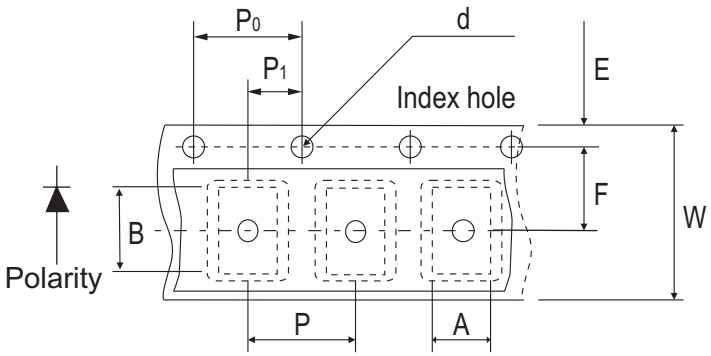

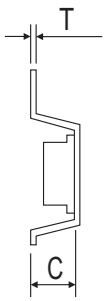

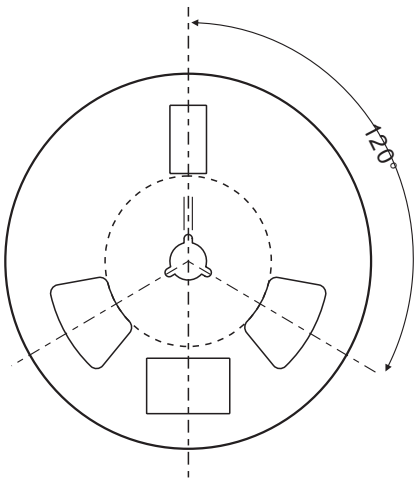

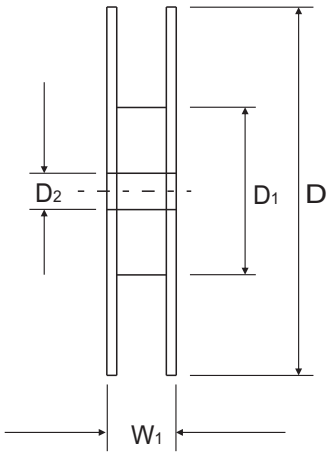

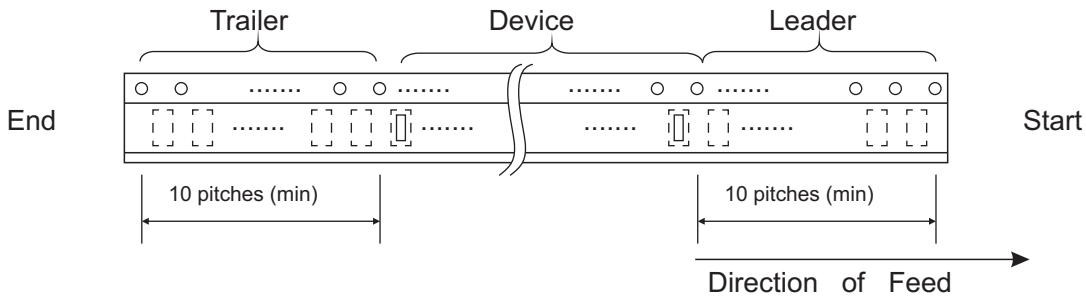

	SYMBOL	A	B	C	d	D	D1	D2
SMA (DO-214AC)	(mm)	2.70 (max)	5.30 (max)	2.66 (max)	1.50 ± 0.10	330	50.0 MIN.	13.5 ± 1.00
	(inch)	0.106 (max)	0.209 (max)	0.105 (max)	0.059 ± 0.004	12.99	1.969 MIN.	0.531 ± 0.039

	SYMBOL	E	F	P	P0	P1	W	W1
SMA (DO-214AC)	(mm)	1.75 ± 0.10	5.50 ± 0.05	4.00 ± 0.10	4.00 ± 0.10	2.00 ± 0.05	12.0 ± 0.20	18.4 (max)
	(inch)	0.689 ± 0.004	0.217 ± 0.002	0.157 ± 0.004	0.157 ± 0.004	0.079 ± 0.002	0.472 ± 0.008	0.724 (max)

Marking Code

Part Number	Marking Code
CDBA220-HF	220
CDBA240-HF	240
CDBA260-HF	260
CDBA280-HF	280
CDBA2100-HF	2100



xxxx = Product type marking code

Suggested PAD Layout

SIZE	DO-214AC(SMA)	
	(mm)	(inch)
A	3.80	0.150
B	1.60	0.063
C	2.80	0.110
D	5.40	0.213
E	2.20	0.087

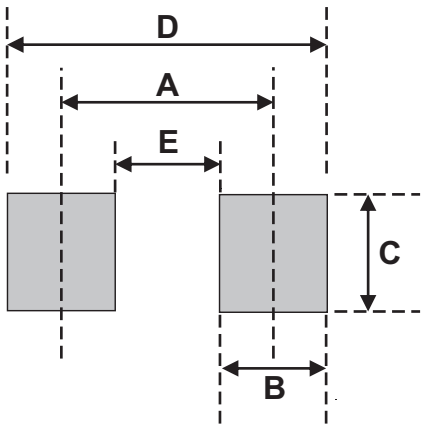

Standard Packaging

Case Type	Qty per Reel	Reel Size
	(Pcs)	(inch)
DO-214AC (SMA)	5000	13