CD54HC297, CD74HC297, CD74HCT297

High-Speed CMOS Logic Digital Phase-Locked Loop

Data sheet acquired from Harris Semiconductor
SCHS177B

November 1997 - Revised May 2003

Features

- **Digital Design Avoids Analog Compensation Errors**
- **Easily Cascadable for Higher Order Loops**
- **Useful Frequency Range**
  - **K-Clock . . . . . .DC to 55MHz (Typ)**
  - **I/D-Clock . . . . . DC to 35MHz (Typ)**
- **Dynamically Variable Bandwidth**
- **Very Narrow Bandwidth Attainable**
- **Power-On Reset**
- **Output Capability**
  - **Standard . . . . . $XORPD_{OUT}$, $ECPD_{OUT}$**
  - **Bus Driver . . . . . I/D_{OUT}**
- **Fanout (Over Temperature Range)**
  - **Standard Outputs . . . . . 10 LSTTL Loads**
  - **Bus Driver Outputs . . . . . 15 LSTTL Loads**
- **Balanced Propagation Delay and Transition Times**
- **Significant Power Reduction Compared to LSTTL Logic ICs**
- **'HC297 Types**
  - **Operation Voltage . . . . . 2 to 6V**
  - **High Noise Immunity N_{IL} = 30%, N_{IH} = 30% of V_{CC} at 5V**
- **CD74HCT297 Types**
  - **Operation Voltage . . . . . 4.5 to 5.5V**
  - **Direct LSTTL Input Logic Compatibility V_{IL} = 0.8V (Max), V_{IH} = 2V (Min)**
  - **CMOS Input Compatibility $I_I \leq 1\mu A$ at V_{OL}, V_{OH}**

Pinout

CD54HC297
(CERDIP)
CD74HC297, CD74HCT29
(PDIP)
TOP VIEW

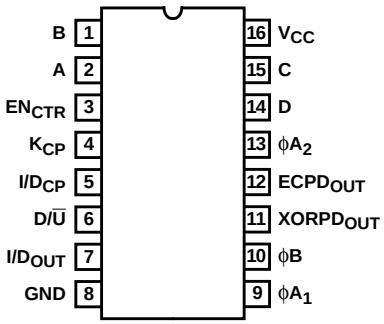

Description

The 'HC297 and CD74HCT297 are high-speed silicon gate CMOS devices that are pin-compatible with low power Schottky TTL (LSTTL).

These devices are designed to provide a simple, cost-effective solution to high-accuracy, digital, phase-locked-loop applications. They contain all the necessary circuits, with the exception of the divide-by-N counter, to build first-order phase-locked-loops.

Both EXCLUSIVE-OR (XORPD) and edge-controlled phase detectors (ECPD) are provided for maximum flexibility. The input signals for the EXCLUSIVE-OR phase detector must have a 50% duty factor to obtain the maximum lock-range.

Proper partitioning of the loop function, with many of the building blocks external to the package, makes it easy for the designer to incorporate ripple cancellation (see Figure 2) or to cascade to higher order phase-locked-loops.

The length of the up/down K-counter is digitally programmable according to the K-counter function table. With A, B, C and D all LOW, the K-counter is disabled. With A HIGH and B, C and D LOW, the K-counter is only three stages long, which widens the bandwidth or capture range and shortens the lock time of the loop. When A, B, C and D are all programmed HIGH, the K-counter becomes seventeen stages long, which narrows the bandwidth or capture range and lengthens the lock time. Real-time control of loop bandwidth by manipulating the A to D inputs can maximize the overall performance of the digital phase-locked-loop.

The 'HC297 and CD74HCT297 can perform the classic first order phase-locked-loop function without using analog components. The accuracy of the digital phase-locked-loop (DPLL) is not affected by V_{CC} and temperature variations but depends solely on accuracies of the K-clock and loop propagation delays.

Ordering Information

PART NUMBER	TEMP. RANGE (^oC)	PACKAGE
CD54HC297F3A	-55 to 125	16 Ld CERDIP
CD74HC297E	-55 to 125	16 Ld PDIP
CD74HCT297E	-55 to 125	16 Ld PDIP

CAUTION: These devices are sensitive to electrostatic discharge. Users should follow proper IC Handling Procedures.

Copyright © 2003, Texas Instruments Incorporated

The phase detector generates an error signal waveform that, at zero phase error, is a 50% duty factor square wave. At the limits of linear operation, the phase detector output will be either HIGH or LOW all of the time depending on the direction of the phase error (ϕIN - ϕOUT). Within these limits the phase detector output varies linearly with the input phase error according to the gain K_d, which is expressed in terms of phase detector output per cycle or phase error. The phase detector output can be defined to vary between ±1 according to the relation:

$$\text{phase detector output} = \frac{\%\text{HIGH} - \%\text{LOW}}{100}$$

The output of the phase detector will be $K_d\phi_e$, where the phase error $\phi_e = \phi\text{IN} - \phi\text{OUT}$.

EXCLUSIVE-OR phase detectors (XORPD) and edge-controlled phase detectors (ECPD) are commonly used digital types. The ECPD is more complex than the XORPD logic function but can be described generally as a circuit that changes states on one of the transitions of its inputs. The gain (K_d) for an XORPD is 4 because its output remains HIGH ($XORPD_{OUT}$ = 1) for a phase error of one quarter cycle.

Similarly, K_d for the ECPD is 2 since its output remains HIGH for a phase error of one half cycle. The type of phase detector will determine the zero-phase-error point, i.e., the phase separation of the phase detector inputs for a ϕe defined to be zero. For the basic DPLL system of Figure 3, ϕe = 0 when the phase detector output is a square wave.

The XORPD inputs are one quarter cycle out-of-phase for zero phase error. For the ECPD, ϕe = 0 when the inputs are one half cycle out of phase.

The phase detector output controls the up/down input to the K-counter. The counter is clocked by input frequency Mf_c which is a multiple M of the loop center frequency f_c. When the K-counter recycles up, it generates a carry pulse. Recycling while counting down generates a borrow pulse. If the carry and the borrow outputs are conceptually combined into one output that is positive for a carry and negative for a borrow, and if the K-counter is considered as a frequency divider with the ratio Mf_c/K, the output of the K-counter will equal the input frequency multiplied by the division ratio. Thus the output from the K-counter is $(K_d\phi_e Mf_c)/K$.

The carry and borrow pulses go to the increment/decrement (I/D) circuit which, in the absence of any carry or borrow pulses has an output that is one half of the input clock (I/D_{CP}). The input clock is just a multiple, 2N, of the loop center frequency. In response to a carry of borrow pulse, the I/D circuit will either add or delete a pulse at I/D_{OUT}. Thus the output of the I/D circuit will be $Nf_c + (K_d\phi_e Mf_c)/2K$.

The output of the N-counter (or the output of the phase-locked-loop) is thus: $f_o = f_c + (K_d\phi_e Mf_c)/2KN$.

If this result is compared to the equation for a first-order analog phase-locked-loop, the digital equivalent of the gain of the VCO is just $Mf_c/2KN$ or f_c/K for M = 2N.

Thus, the simple first-order phase-locked-loop with an adjustable K-counter is the equivalent of an analog phase-locked-loop with a programmable VCO gain.

Functional Diagram

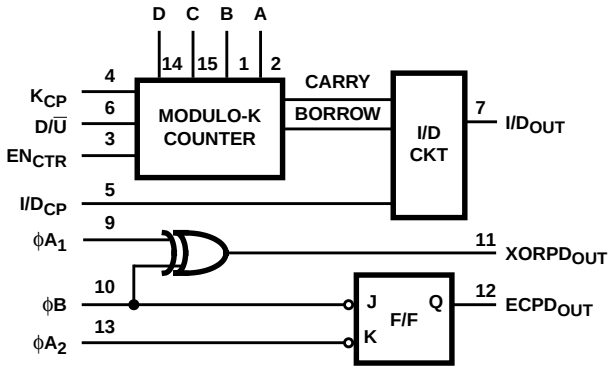

FUNCTION TABLE
EXCLUSIVE-OR PHASE DETECTOR

ϕA_1	ϕB	XORPD OUT
L	L	L
L	H	H
H	L	H
H	H	L

FUNCTION TABLE
EDGE-CONTROLLED PHASE DETECTOR

ϕA_2	ϕB	ECPD OUT
H or L	↓	H
↓	H or L	L
H or L	↑	No Change
↑	H or L	No Change

H = Steady-State High Level, L = Steady-State Low Level, ↑ = LOW to HIGH ϕ Transition, ↓ = HIGH to LOW ϕ Transition

K-COUNTER FUNCTION TABLE
(DIGITAL CONTROL)

D	C	B	A	MODULO (K)
L	L	L	L	Inhibited
L	L	L	H	2^3
L	L	H	L	2^4
L	L	H	H	2^5
L	H	L	L	2^6
L	H	L	H	2^7
L	H	H	L	2^8
L	H	H	H	2^9
H	L	L	L	2^{10}
H	L	L	H	2^{11}
H	L	H	L	2^{12}
H	L	H	H	2^{13}
H	H	L	L	2^{14}
H	H	L	H	2^{15}
H	H	H	L	2^{16}
H	H	H	H	2^{17}

Absolute Maximum Ratings

DC Supply Voltage, V_{CC} . . . . . -0.5V to 7V
DC Input Diode Current, I_{IK}
For V_I < -0.5V or V_I > V_{CC} + 0.5V . . . . . ±20mA
DC Output Diode Current, I_{OK}
For V_O < -0.5V or V_O > V_{CC} + 0.5V . . . . . ±20mA
DC Drain Current, per Output, I_O
For -0.5V < V_O < V_{CC} + 0.5V . . . . . ±25mA
DC Output Source or Sink Current per Output Pin, I_O
For V_O > -0.5V or V_O < V_{CC} + 0.5V . . . . . ±25mA
DC V_{CC} or Ground Current, I_{CC} . . . . . ±50mA

Operating Conditions

Temperature Range, T_A . . . . . -55°C to 125°C
Supply Voltage Range, V_{CC}
HC Types . . . . . 2V to 6V
HCT Types . . . . . 4.5V to 5.5V
DC Input or Output Voltage, V_I, V_O . . . . . 0V to V_{CC}
Input Rise and Fall Time
2V . . . . . 1000ns (Max)
4.5V. . . . . 500ns (Max)
6V . . . . . 400ns (Max)

Thermal Information

Thermal Resistance (Typical, Note 1) θ_{JA} (°C/W)
E (PDIP) Package 67
Maximum Junction Temperature . . . . . 150°C
Maximum Storage Temperature Range . . . . . -65°C to 150°C
Maximum Lead Temperature (Soldering 10s) . . . . . 300°C

CAUTION: Stresses above those listed in "Absolute Maximum Ratings" may cause permanent damage to the device. This is a stress only rating and operation of the device at these or any other conditions above those indicated in the operational sections of this specification is not implied.

NOTE:

1. The package thermal impedance is calculated in accordance with JESD 51-7.

DC Electrical Specifications

PARAMETER	SYMBOL	TEST CONDITIONS		V_{CC} (V)	25°C			-40°C TO 85°C		-55°C TO 125°C		UNITS
		V_I (V)	I_O (mA)		MIN	TYP	MAX	MIN	MAX	MIN	MAX	
HC TYPES												
High Level Input Voltage	V_{IH}	-	-	2	1.5	-	-	1.5	-	1.5	-	V
				4.5	3.15	-	-	3.15	-	3.15	-	V
				6	4.2	-	-	4.2	-	4.2	-	V
Low Level Input Voltage	V_{IL}	-	-	2	-	-	0.5	-	0.5	-	0.5	V
				4.5	-	-	1.35	-	1.35	-	1.35	V
				6	-	-	1.8	-	1.8	-	1.8	V
High Level Output Voltage CMOS Loads	V_{OH}	V_{IH} or V_{IL}	-0.02	2	1.9	-	-	1.9	-	1.9	-	V
			-0.02	4.5	4.4	-	-	4.4	-	4.4	-	V
			-0.02	6	5.9	-	-	5.9	-	5.9	-	V
High Level Output Voltage TTL Loads			-6 (Note 2)	4.5	3.98	-	-	3.84	-	3.7	-	V
			-7.8 (Note 2)	6	5.48	-	-	5.34	-	5.2	-	V
Low Level Output Voltage CMOS Loads	V_{OL}	V_{IH} or V_{IL}	0.02	2	-	-	0.1	-	0.1	-	0.1	V
			0.02	4.5	-	-	0.1	-	0.1	-	0.1	V
			0.02	6	-	-	0.1	-	0.1	-	0.1	V
Low Level Output Voltage TTL Loads			4 (Note 2)	4.5	-	-	0.26	-	0.33	-	0.4	V
			5.2 (Note 2)	6	-	-	0.26	-	0.33	-	0.4	V

DC Electrical Specifications (Continued)

PARAMETER	SYMBOL	TEST CONDITIONS		V_{CC} (V)	25°C			-40°C TO 85°C		-55°C TO 125°C		UNITS
		V_I (V)	I_O (mA)		MIN	TYP	MAX	MIN	MAX	MIN	MAX	
Input Leakage Current	I_I	V_{CC} or GND	-	6	-	-	±0.1	-	±1	-	±1	µA
Quiescent Device Current	I_{CC}	V_{CC} or GND	0	6	-	-	8	-	80	-	160	µA
HCT TYPES												
High Level Input Voltage	V_{IH}	-	-	4.5 to 5.5	2	-	-	2	-	2	-	V
Low Level Input Voltage	V_{IL}	-	-	4.5 to 5.5	-	-	0.8	-	0.8	-	0.8	V
High Level Output Voltage CMOS Loads	V_{OH}	V_{IH} or V_{IL}	-0.02	4.5	4.4	-	-	4.4	-	4.4	-	V
High Level Output Voltage TTL Loads			-4	4.5	3.98	-	-	3.84	-	3.7	-	V
Low Level Output Voltage CMOS Loads	V_{OL}	V_{IH} or V_{IL}	0.02	4.5	-	-	0.1	-	0.1	-	0.1	V
Low Level Output Voltage TTL Loads			4	4.5	-	-	0.26	-	0.33	-	0.4	V
Input Leakage Current	I_I	V_{CC} to GND	0	5.5	-	-	±0.1	-	±1	-	±1	µA
Quiescent Device Current	I_{CC}	V_{CC} or GND	0	5.5	-	-	8	-	80	-	160	µA
Additional Quiescent Device Current Per Input Pin: 1 Unit Load	ΔI_{CC} (Note 2)	V_{CC} -2.1	-	4.5 to 5.5	-	100	360	-	450	-	490	µA

NOTE:

2. For dual-supply systems theoretical worst case (V_I = 2.4V, V_{CC} = 5.5V) specification is 1.8mA.

HCT Input Loading Table

INPUT	UNIT LOADS
EN_{CTR}, $D/\overline{U}$	0.3
A, B, C, D, K_{CP}, ϕA_2	0.6
I/D_{CP}, ϕA_1, ϕB	1.5

NOTE: Unit Load is ΔI_{CC} limit specified in DC Electrical Specifications table, e.g., 360µA max at 25°C.

Prerequisite For Switching Function

PARAMETER	SYMBOL	V_{CC} (V)	25°C		-40°C TO 85°C		-55°C TO 125°C		UNITS
			MIN	MAX	MIN	MAX	MIN	MAX	
HC TYPES									
Maximum Clock Frequency K_{CP}	f_{MAX}	2	6	-	5	-	4	-	MHz
		4.5	30	-	24	-	20	-	MHz
		6	35	-	28	-	24	-	MHz
Maximum Clock Frequency I/D_{CP}	f_{MAX}	2	4	-	3	-	2	-	MHz
		4.5	20	-	16	-	13	-	MHz
		6	24	-	19	-	15	-	MHz
Clock Pulse Width K_{CP}	t_w	2	80	-	100	-	120	-	ns
		4.5	16	-	20	-	24	-	ns
		6	14	-	17	-	20	-	ns
Clock Pulse Width I/D_{CP}	t_W	2	125	-	155	-	190	-	ns
		4.5	25	-	31	-	38	-	ns
		6	21	-	26	-	32	-	ns
Set-up Time $D/\overline{U}$, EN_{CTR} to K_{CP}	t_{SU}	2	100	-	125	-	150	-	ns
		4.5	20	-	25	-	30	-	ns
		6	17	-	21	-	26	-	ns
Hold Time $D/\overline{U}$, EN_{CTR} to K_{CP}	t_H	2	0	-	0	-	0	-	ns
		4.5	0	-	0	-	0	-	ns
		6	0	-	0	-	0	-	ns
HCT TYPES									
Maximum Clock Frequency K_{CP}	f_{MAX}	4.5	30	-	24	-	20	-	MHz
Maximum Clock Frequency I/D_{CP}	f_{MAX}	4.5	20	-	16	-	13	-	MHz
Clock Pulse Width K_{CP}	t_w	4.5	16	-	20	-	24	-	ns
Clock Pulse Width I/D_{CP}	t_w	4.5	25	-	31	-	38	-	ns
Set-up Time $D/\overline{U}$, EN_{CTR} to K_{CP}	t_{SU}	4.5	20	-	25	-	30	-	ns
Hold Time $D/\overline{U}$, EN_{CTR} to K_{CP}	t_H	4.5	0	-	0	-	0	-	ns

Switching Specifications Input t_r, t_f = 6ns

PARAMETER	SYMBOL	TEST CONDITIONS	V_{CC} (V)	25°C		-40°C TO 85°C	-55°C TO 125°C	UNITS
				TYP	MAX	MAX	MAX	
HC TYPES								
Propagation Delay, I/D_{CP} to I/D_{OUT}	t_{PLH}, t_{PHL}	C_L = 50pF	2	-	175	220	265	ns
			4.5	-	35	44	53	ns
			6	-	30	34	43	ns

Switching Specifications Input t_r, t_f = 6ns **(Continued)**

PARAMETER	SYMBOL	TEST CONDITIONS	V_{CC} (V)	25°C		-40°C TO 85°C	-55°C TO 125°C	UNITS
				TYP	MAX	MAX	MAX	
Propagation Delay, ϕA_1, ϕB to $XORPD_{OUT}$	t_{PLH}, t_{PHL}	C_L = 50pF	2	-	150	190	225	ns
			4.5	-	30	38	45	ns
			6	-	26	33	38	ns
Propagation Delay, ϕB, ϕA_2 to $ECPD_{OUT}$	t_{PHL}, t_{PHL}	C_L = 50pF	2	-	200	250	300	ns
			4.5	-	40	50	60	ns
			6	-	34	43	51	ns
Output Transition Time $XORPD_{OUT}$ $ECPD_{OUT}$	t_{TLH}	C_L = 50pF	2	-	75	95	110	ns
			4.5	-	15	19	22	ns
			6	-	13	16	19	ns
Output Transition Time I/D_{OUT}	t_{TLH}	C_L = 50pF	2	-	60	75	90	ns
			4.5	-	12	15	18	ns
			6	-	10	13	15	ns
Input Capacitance	C_I	-	-	-	10	10	10	pF
HCT TYPES								
Propagation Delay, I/D_{CP} to I/D_{OUT}	t_{PLH}, t_{PHL}	C_L = 50pF	4.5	-	35	44	53	ns
Propagation Delay, ϕA_1, ϕB to $XORPD_{OUT}$	t_{PLH}, t_{PHL}	C_L = 50pF	4.5	-	30	38	45	ns
Propagation Delay, ϕB, ϕA_2 to $ECPD_{OUT}$	t_{PHL}, t_{PHL}	C_L = 50pF	4.5	-	40	50	60	ns
Output Transition Time $XORPD_{OUT}$	t_{TLH}	C_L = 50pF	4.5	-	15	19	22	ns
Output Transition Time $ECPD_{OUT}$	t_{TLH}	C_L = 50pF	4.5	-	12	15	18	ns
Input Capacitance	C_I	-	-	-	10	10	10	pF

Logic Diagram

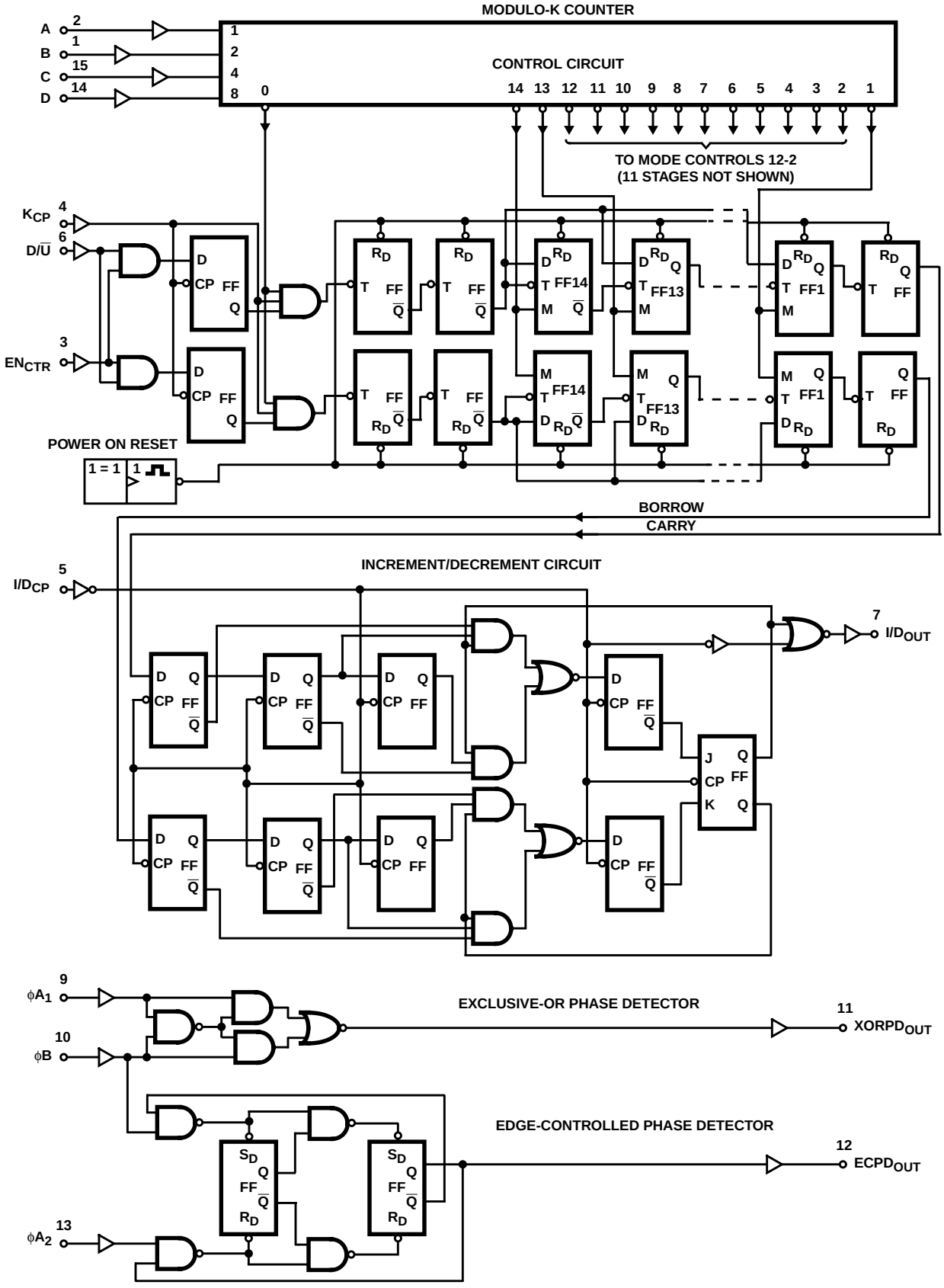

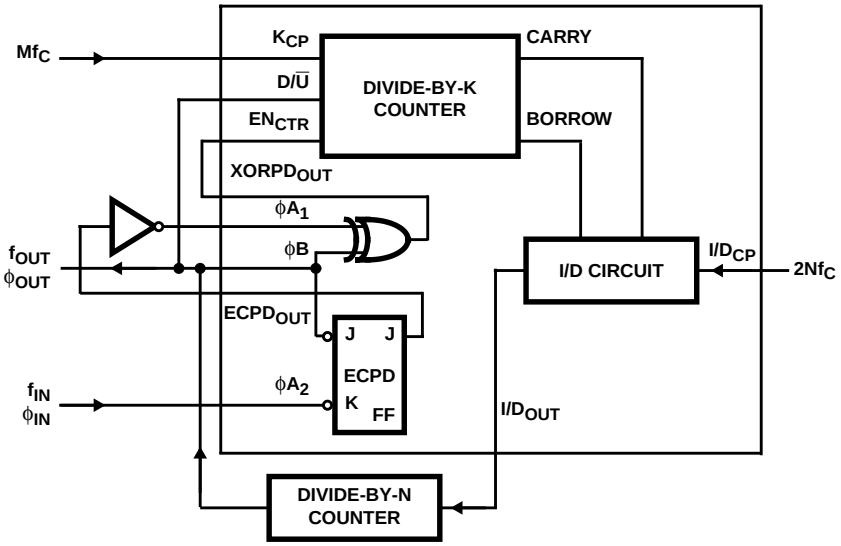

FIGURE 1. DPLL USING BOTH PHASE DETECTORS IN A RIPPLE-CANCELLATION SCHEME

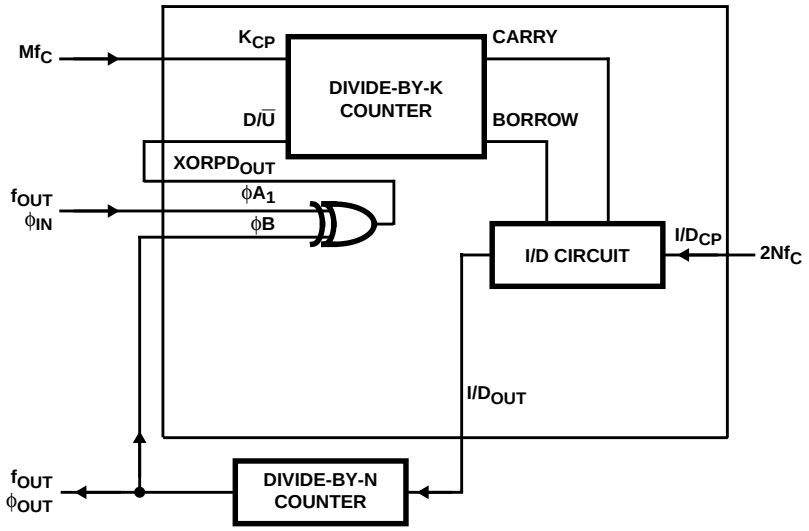

FIGURE 2. DPLL USING EXCLUSIVE-OR PHASE DETECTION

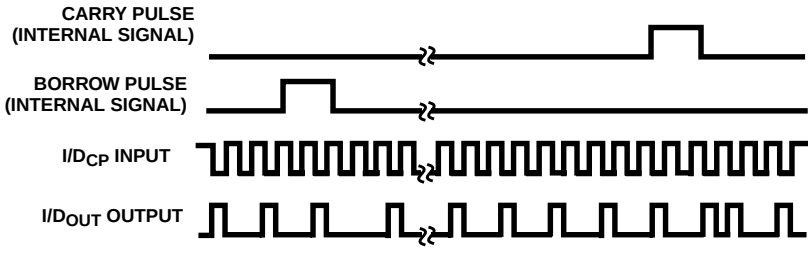

FIGURE 3. TIMING DIAGRAM: I/D$_{OUT}$ IN-LOCK CONDITION

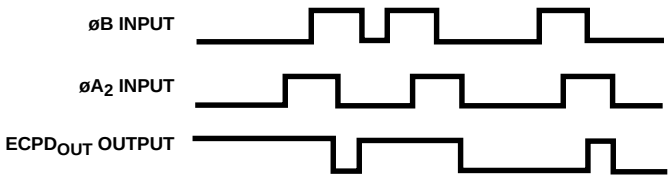

FIGURE 4. TIMING DIAGRAM: EDGE CONTROLLED PHASE COMPARATOR WAVEFORMS

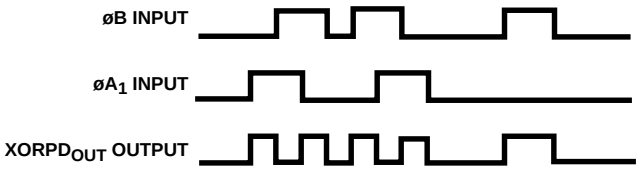

FIGURE 5. TIMING DIAGRAM: EXCLUSIVE OR PHASE DETECTOR WAVEFORMS

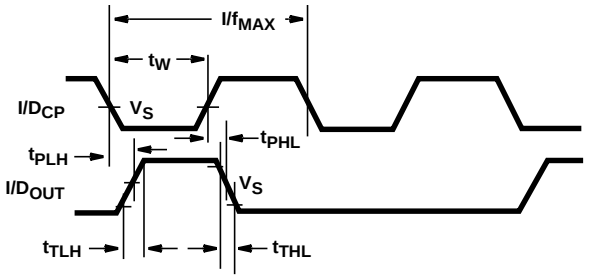

FIGURE 6. WAVEFORMS SHOWING THE CLOCK (I/D_{CP}) TO OUTPUT (I/D_{OUT}) PROPAGATION DELAYS, CLOCK PULSE WIDTH, OUTPUT TRANSITION TIMES AND MAXIMUM CLOCK PULSE FREQUENCY

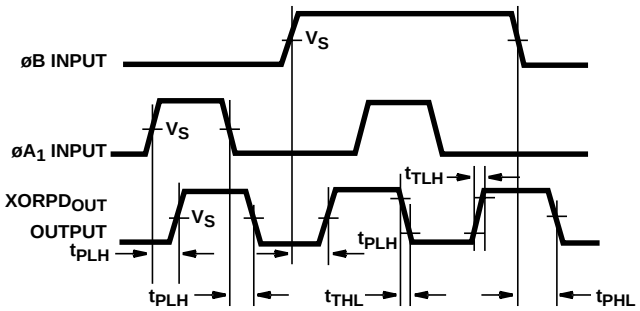

FIGURE 7. WAVEFORMS SHOWING THE PHASE INPUT (øB, $øA_1$) TO OUTPUT ($XORPD_{OUT}$) PROPAGATION DELAYS AND OUTPUT TRANSITION TIMES

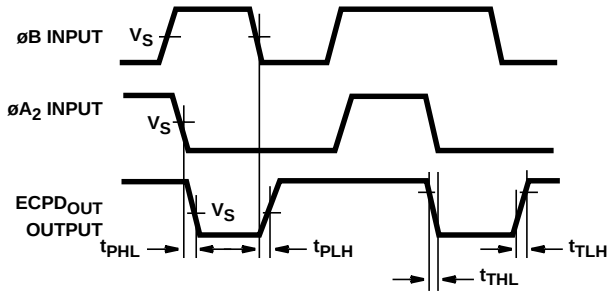

FIGURE 8. WAVEFORMS SHOWING THE PHASE INPUT (øB, $øA_2$) TO OUTPUT ($ECPD_{OUT}$) PROPAGATION DELAYS AND OUTPUT TRANSITION TIMES

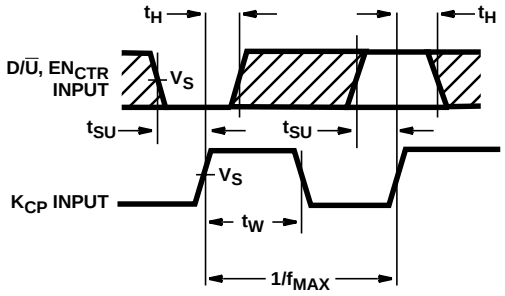

NOTE: The shaded areas indicate when the input is permitted to change for predictable output performance.

FIGURE 9. WAVEFORMS SHOWING THE CLOCK (K_{CP}) PULSE WIDTH AND MAXIMUM CLOCK PULSE FREQUENCY, AND THE INPUT ($D/\overline{U}$, EN_{CTR}) TO CLOCK (K_{CP}) SETUP AND HOLD TIMES

PACKAGING INFORMATION

Orderable Device	Status (1)	Package Type	Package Drawing	Pins	Package Qty	Eco Plan (2)	Lead/Ball Finish (6)	MSL Peak Temp (3)	Op Temp (°C)	Device Marking (4/5)	Samples
5962-8999001EA	ACTIVE	CDIP	J	16	1	TBD	A42	N / A for Pkg Type	-55 to 125	5962-8999001EA CD54HC297F3A	Samples
CD54HC297F3A	ACTIVE	CDIP	J	16	1	TBD	A42	N / A for Pkg Type	-55 to 125	5962-8999001EA CD54HC297F3A	Samples
CD74HC297E	ACTIVE	PDIP	N	16	25	Pb-Free (RoHS)	CU NIPDAU	N / A for Pkg Type	-55 to 125	CD74HC297E	Samples
CD74HC297EE4	ACTIVE	PDIP	N	16	25	Pb-Free (RoHS)	CU NIPDAU	N / A for Pkg Type	-55 to 125	CD74HC297E	Samples
CD74HCT297E	ACTIVE	PDIP	N	16	25	Pb-Free (RoHS)	CU NIPDAU	N / A for Pkg Type	-55 to 125	CD74HCT297E	Samples

(1) The marketing status values are defined as follows:
ACTIVE: Product device recommended for new designs.
LIFEBUY: TI has announced that the device will be discontinued, and a lifetime-buy period is in effect.
NRND: Not recommended for new designs. Device is in production to support existing customers, but TI does not recommend using this part in a new design.
PREVIEW: Device has been announced but is not in production. Samples may or may not be available.
OBSOLETE: TI has discontinued the production of the device.

(2) Eco Plan - The planned eco-friendly classification: Pb-Free (RoHS), Pb-Free (RoHS Exempt), or Green (RoHS & no Sb/Br) - please check http://www.ti.com/productcontent for the latest availability information and additional product content details.
TBD: The Pb-Free/Green conversion plan has not been defined.
Pb-Free (RoHS): TI's terms "Lead-Free" or "Pb-Free" mean semiconductor products that are compatible with the current RoHS requirements for all 6 substances, including the requirement that lead not exceed 0.1% by weight in homogeneous materials. Where designed to be soldered at high temperatures, TI Pb-Free products are suitable for use in specified lead-free processes.
Pb-Free (RoHS Exempt): This component has a RoHS exemption for either 1) lead-based flip-chip solder bumps used between the die and package, or 2) lead-based die adhesive used between the die and leadframe. The component is otherwise considered Pb-Free (RoHS compatible) as defined above.
Green (RoHS & no Sb/Br): TI defines "Green" to mean Pb-Free (RoHS compatible), and free of Bromine (Br) and Antimony (Sb) based flame retardants (Br or Sb do not exceed 0.1% by weight in homogeneous material)

(3) MSL, Peak Temp. - The Moisture Sensitivity Level rating according to the JEDEC industry standard classifications, and peak solder temperature.

(4) There may be additional marking, which relates to the logo, the lot trace code information, or the environmental category on the device.

(5) Multiple Device Markings will be inside parentheses. Only one Device Marking contained in parentheses and separated by a "~" will appear on a device. If a line is indented then it is a continuation of the previous line and the two combined represent the entire Device Marking for that device.

(6) Lead/Ball Finish - Orderable Devices may have multiple material finish options. Finish options are separated by a vertical ruled line. Lead/Ball Finish values may wrap to two lines if the finish value exceeds the maximum column width.

Important Information and Disclaimer: The information provided on this page represents TI's knowledge and belief as of the date that it is provided. TI bases its knowledge and belief on information provided by third parties, and makes no representation or warranty as to the accuracy of such information. Efforts are underway to better integrate information from third parties. TI has taken and continues to take reasonable steps to provide representative and accurate information but may not have conducted destructive testing or chemical analysis on incoming materials and chemicals. TI and TI suppliers consider certain information to be proprietary, and thus CAS numbers and other limited information may not be available for release.

In no event shall TI's liability arising out of such information exceed the total purchase price of the TI part(s) at issue in this document sold by TI to Customer on an annual basis.

OTHER QUALIFIED VERSIONS OF CD54HC297, CD74HC297 :

- Catalog: CD74HC297
- Military: CD54HC297

NOTE: Qualified Version Definitions:

- Catalog - TI's standard catalog product
- Military - QML certified for Military and Defense Applications

J (R–GDIP–T**)

14 LEADS SHOWN

CERAMIC DUAL IN–LINE PACKAGE

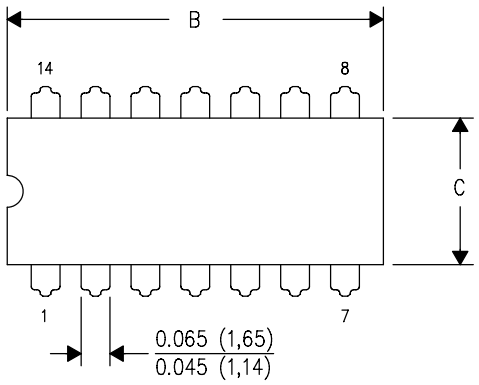

DIM \ PINS **	14	16	18	20
A	0.300 (7,62) BSC	0.300 (7,62) BSC	0.300 (7,62) BSC	0.300 (7,62) BSC
B MAX	0.785 (19,94)	.840 (21,34)	0.960 (24,38)	1.060 (26,92)
B MIN	—	—	—	—
C MAX	0.300 (7,62)	0.300 (7,62)	0.310 (7,87)	0.300 (7,62)
C MIN	0.245 (6,22)	0.245 (6,22)	0.220 (5,59)	0.245 (6,22)

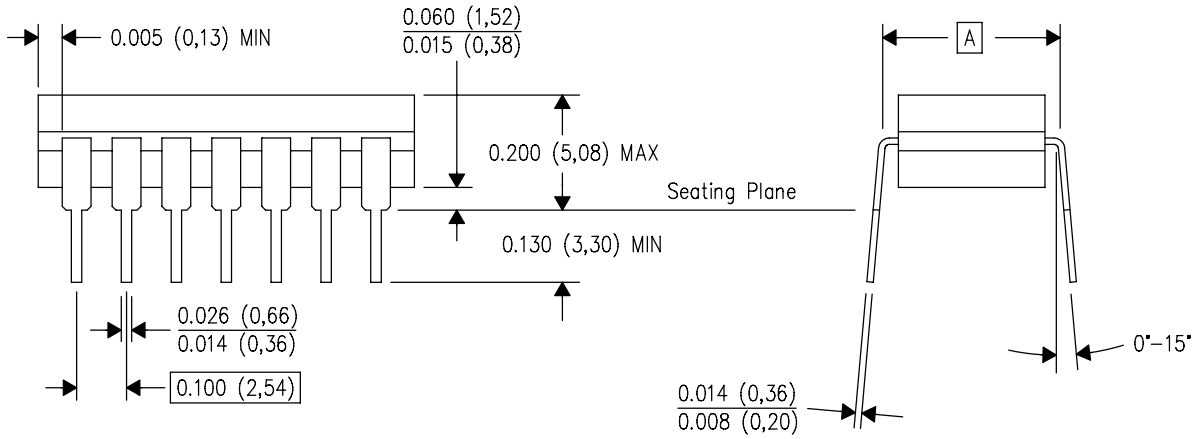

4040083/F 03/03

NOTES:
A. All linear dimensions are in inches (millimeters).
B. This drawing is subject to change without notice.
C. This package is hermetically sealed with a ceramic lid using glass frit.
D. Index point is provided on cap for terminal identification only on press ceramic glass frit seal only.
E. Falls within MIL STD 1835 GDIP1–T14, GDIP1–T16, GDIP1–T18 and GDIP1–T20.

N (R–PDIP–T**)

PLASTIC DUAL–IN–LINE PACKAGE

16 PINS SHOWN

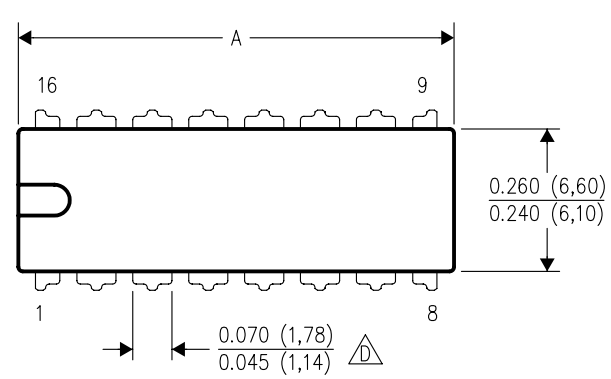

DIM \ PINS **	14	16	18	20
A MAX	0.775 (19,69)	0.775 (19,69)	0.920 (23,37)	1.060 (26,92)
A MIN	0.745 (18,92)	0.745 (18,92)	0.850 (21,59)	0.940 (23,88)
MS–001 VARIATION (C)	AA	BB	AC	AD

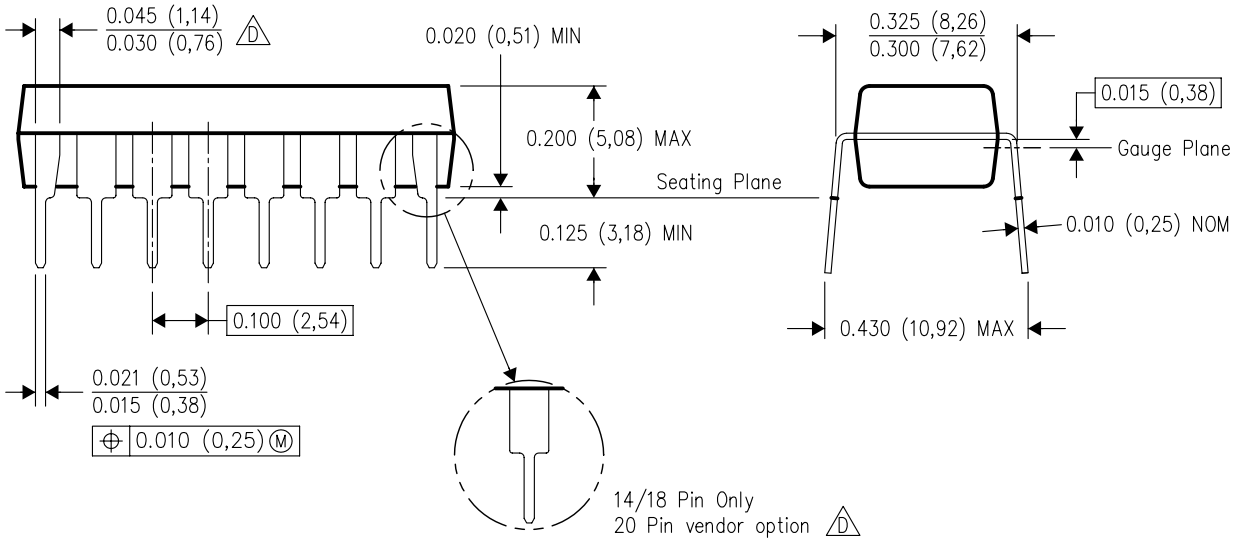

4040049/E 12/2002

NOTES:
A. All linear dimensions are in inches (millimeters).
B. This drawing is subject to change without notice.
C. Falls within JEDEC MS–001, except 18 and 20 pin minimum body length (Dim A).
D. The 20 pin end lead shoulder width is a vendor option, either half or full width.

IMPORTANT NOTICE

Texas Instruments Incorporated and its subsidiaries (TI) reserve the right to make corrections, enhancements, improvements and other changes to its semiconductor products and services per JESD46, latest issue, and to discontinue any product or service per JESD48, latest issue. Buyers should obtain the latest relevant information before placing orders and should verify that such information is current and complete. All semiconductor products (also referred to herein as “components”) are sold subject to TI’s terms and conditions of sale supplied at the time of order acknowledgment.

TI warrants performance of its components to the specifications applicable at the time of sale, in accordance with the warranty in TI’s terms and conditions of sale of semiconductor products. Testing and other quality control techniques are used to the extent TI deems necessary to support this warranty. Except where mandated by applicable law, testing of all parameters of each component is not necessarily performed.

TI assumes no liability for applications assistance or the design of Buyers’ products. Buyers are responsible for their products and applications using TI components. To minimize the risks associated with Buyers’ products and applications, Buyers should provide adequate design and operating safeguards.

TI does not warrant or represent that any license, either express or implied, is granted under any patent right, copyright, mask work right, or other intellectual property right relating to any combination, machine, or process in which TI components or services are used. Information published by TI regarding third-party products or services does not constitute a license to use such products or services or a warranty or endorsement thereof. Use of such information may require a license from a third party under the patents or other intellectual property of the third party, or a license from TI under the patents or other intellectual property of TI.

Reproduction of significant portions of TI information in TI data books or data sheets is permissible only if reproduction is without alteration and is accompanied by all associated warranties, conditions, limitations, and notices. TI is not responsible or liable for such altered documentation. Information of third parties may be subject to additional restrictions.

Resale of TI components or services with statements different from or beyond the parameters stated by TI for that component or service voids all express and any implied warranties for the associated TI component or service and is an unfair and deceptive business practice. TI is not responsible or liable for any such statements.

Buyer acknowledges and agrees that it is solely responsible for compliance with all legal, regulatory and safety-related requirements concerning its products, and any use of TI components in its applications, notwithstanding any applications-related information or support that may be provided by TI. Buyer represents and agrees that it has all the necessary expertise to create and implement safeguards which anticipate dangerous consequences of failures, monitor failures and their consequences, lessen the likelihood of failures that might cause harm and take appropriate remedial actions. Buyer will fully indemnify TI and its representatives against any damages arising out of the use of any TI components in safety-critical applications.

In some cases, TI components may be promoted specifically to facilitate safety-related applications. With such components, TI’s goal is to help enable customers to design and create their own end-product solutions that meet applicable functional safety standards and requirements. Nonetheless, such components are subject to these terms.

No TI components are authorized for use in FDA Class III (or similar life-critical medical equipment) unless authorized officers of the parties have executed a special agreement specifically governing such use.

Only those TI components which TI has specifically designated as military grade or “enhanced plastic” are designed and intended for use in military/aerospace applications or environments. Buyer acknowledges and agrees that any military or aerospace use of TI components which have ***not*** been so designated is solely at the Buyer's risk, and that Buyer is solely responsible for compliance with all legal and regulatory requirements in connection with such use.

TI has specifically designated certain components as meeting ISO/TS16949 requirements, mainly for automotive use. In any case of use of non-designated products, TI will not be responsible for any failure to meet ISO/TS16949.

Products		**Applications**	
Audio	www.ti.com/audio	Automotive and Transportation	www.ti.com/automotive
Amplifiers	amplifier.ti.com	Communications and Telecom	www.ti.com/communications
Data Converters	dataconverter.ti.com	Computers and Peripherals	www.ti.com/computers
DLP® Products	www.dlp.com	Consumer Electronics	www.ti.com/consumer-apps
DSP	dsp.ti.com	Energy and Lighting	www.ti.com/energy
Clocks and Timers	www.ti.com/clocks	Industrial	www.ti.com/industrial
Interface	interface.ti.com	Medical	www.ti.com/medical
Logic	logic.ti.com	Security	www.ti.com/security
Power Mgmt	power.ti.com	Space, Avionics and Defense	www.ti.com/space-avionics-defense
Microcontrollers	microcontroller.ti.com	Video and Imaging	www.ti.com/video
RFID	www.ti-rfid.com		
OMAP Applications Processors	www.ti.com/omap	**TI E2E Community**	e2e.ti.com
Wireless Connectivity	www.ti.com/wirelessconnectivity		

Mailing Address: Texas Instruments, Post Office Box 655303, Dallas, Texas 75265
Copyright © 2014, Texas Instruments Incorporated