TEXAS INSTRUMENTS
Data sheet acquired from Harris Semiconductor
SCHS037B – Revised June 2003

CD4034B Types

CMOS 8-Stage Static Bidirectional Parallel/Serial Input/Output Bus Register

High-Voltage Types (20-Volt Rating)

■ CD4034B is a static eight-stage parallel-or serial-input parallel-output register. It can be used to:

1) bidirectionally transfer parallel information between two buses, 2) convert serial data to parallel form and direct the parallel data to either of two buses, 3) store (recirculate) parallel data, or 4) accept parallel data from either of two buses and convert that data to serial form. Inputs that control the operations include a single-phase CLOCK (CL), A DATA ENABLE (AE), ASYNCHRONOUS/SYNCHRONOUS (A/S), A-BUS-TO-B-BUS/B-BUS-TO-A-BUS (A/B), and PARALLEL/SERIAL (P/S).

Data inputs include 16 bidirectional parallel data lines of which the eight A data lines are inputs (3-state outputs) and the B data lines are outputs (inputs) depending on the signal level on the A/B input. In addition, an input for SERIAL DATA is also provided.

All register stages are D-type master-slave flip-flops with separate master and slave clock inputs generated internally to allow synchronous or asynchronous data transfer from master to slave. Isolation from external noise and the effects of loading is provided by output buffering.

PARALLEL OPERATION

A high P/S input signal allows data transfer into the register via the parallel data lines synchronously with the positive transition of the clock provided the A/S input is low. If the A/S input is high the transfer is independent of the clock. The direction of data flow is controlled by the A/B input. When this signal is high the A data lines are inputs (and B data lines are outputs); a low A/B signal reverses the direction of data flow.

The AE input is an additional feature which allows many registers to feed data to a common bus. The A DATA lines are enabled only when this signal is high.

Data storage through recirculation of data in each register stage is accomplished by making the A/B signal high and the AE signal low.

Applications:

- **Parallel Input/Parallel Output, Serial Input/Parallel Output, Serial Input/Serial Output Register**
- **Shift right/shift left register**
- **Shift right/shift left with parallel loading**
- **Address register**
- **Buffer register**
- **Bus system register with enable parallel lines at bus side**
- **Double bus register system**
- **Up-Down Johnson or ring counter**
- **Pseudo-random code generators**
- **Sample and hold register (storage, counting, display)**
- **Frequency and phase comparator**

SERIAL OPERATION

A low P/S signal allows serial data to transfer into the register synchronously with the positive transition of the clock. The A/S input is internally disabled when the register is in the serial mode (asynchronous serial operation is not allowed).

The serial data appears as output data on either the B lines (when A/B is high) or the A lines (when A/B is low and the AE signal is high).

Register expansion can be accomplished by simply cascading CD4034B packages.

The CD4034B types are supplied in 24-lead hermetic dual-in-line ceramic packages (F3A suffix), 24-lead dual-in-line plastic packages (E suffix), 24-lead small-outline packages (M, M96, and NSR suffixes), and 24-lead thin shrink small-outline packages (PW and PWR suffixes).

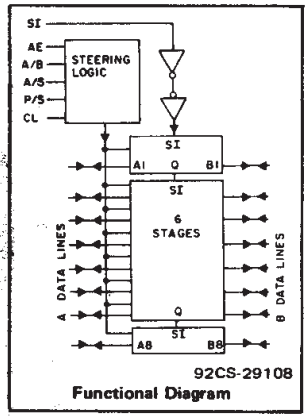

Functional Diagram

Features:

- **Bidirectional parallel data input**
- **Parallel or serial inputs/parallel outputs**
- **Asynchronous or synchronous parallel data loading**
- **Parallel data-input enable on "A" data lines (3-state output)**
- **Data recirculation for register expansion**
- **Multipackage register expansion**
- **Fully static operation dc-to-10 MHz (typ.) at V_{DD} = 10 V**
- **Standardized, symmetrical output characteristics**
- **100% tested for quiescent current at 20 V**
- **5-V, 10-V, and 15-V parametric ratings**
- **Maximum input current of 1 μA at 18 V over full package-temperature range; 100 nA at 18 V and 25°C**
- **Noise margin (over full package-temperature range):**
  - **1 V at V_{DD} = 5 V**
  - **2 V at V_{DD} = 10 V**
  - **2.5 V at V_{DD} = 15 V**
- **Meets all requirements of JEDEC Tentative Standard No. 13B, "Standard Specifications for Description of 'B' Series CMOS Devices"**

MAXIMUM RATINGS, *Absolute-Maximum Values:*

DC SUPPLY-VOLTAGE RANGE, (V_{DD})
Voltages referenced to V_{SS} Terminal) ..... -0.5V to +20V
INPUT VOLTAGE RANGE, ALL INPUTS ..... -0.5V to V_{DD} +0.5V
DC INPUT CURRENT, ANY ONE INPUT ..... ±10mA
POWER DISSIPATION PER PACKAGE (P_D):
For T_A = -55°C to +100°C 500mW
For T_A = +100°C to +125°C ..... Derate Linearity at 12mW/°C to 200mW
DEVICE DISSIPATION PER OUTPUT TRANSISTOR
FOR T_A = FULL PACKAGE-TEMPERATURE RANGE (All Package Types) 100mW
OPERATING-TEMPERATURE RANGE (T_A) ..... -55°C to +125°C
STORAGE TEMPERATURE RANGE (T_{stg}) ..... -65°C to +150°C
LEAD TEMPERATURE (DURING SOLDERING):
At distance 1/16 ± 1/32 inch (1.59 ± 0.79mm) from case for 10s max ..... +265°C

Copyright © 2003, Texas Instruments Incorporated

RECOMMENDED OPERATING CONDITIONS at T_A = 25°C, Except as Noted.
For maximum reliability, nominal operating conditions should be selected so that operation is always within the following ranges:

CHARACTERISTIC		V_{DD} (V)	LIMITS Min.	LIMITS Max.	UNITS
Supply-Voltage Range (For T_A = Full Package-Temperature Range)			3	18	V
Data Setup Time, t_S	Serial Data to Clock	5	160	–	ns
		10	60	–	
		15	40	–	
	Parallel Data to Clock	5	50	–	ns
		10	30	–	
		15	20	–	
Clock Pulse Width, t_W		5	350	–	ns
		10	140	–	
		15	80	–	
Clock Input Frequency, f_{CL}		5	dc	2	MHz
		10		5	
		15		7	
Clock Input Rise or Fall Time, t_rCL, t_fCL*		5, 10, 15	–	15	μs

*If more than one unit is cascaded t_rCL should be made less than or equal to the sum of the transition time and the fixed propagation delay of the output of the driving stage for the estimated capacitive load.

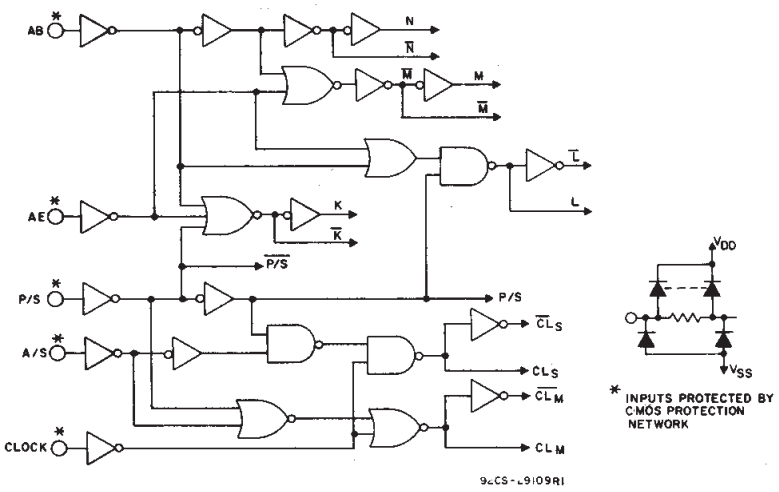

Fig. 1 – Steering logic diagram.

FLIP-FLOP TRUTH TABLE

INPUTS $\overline{CL}_M$	INPUTS $\overline{CL}_S$	INPUTS D	OUTPUT Q
↓	↓	0	0
↑	↓	0	0
↓	↑	0	INVALID CONDITION
↑	↑	X	0
↓	↓	1	1
↑	↓	1	1
↓	↑	1	INVALID CONDITION

1 = High Level 0 = Low Level X = Don't Care

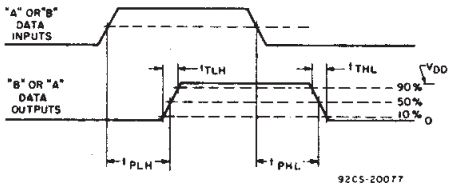

Fig. 2 – Asynchronous operation propagation delay time and transition time.

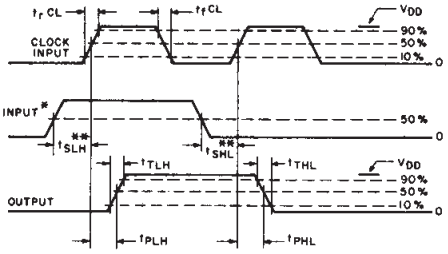

Fig. 3 – Synchronous operation propagation delay times, transition times, and set-up times.

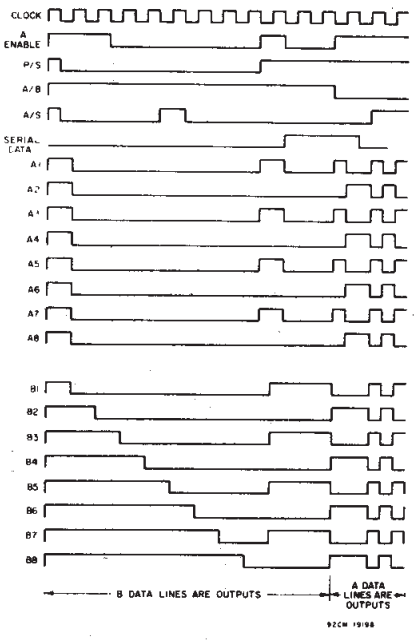

Fig. 4 – Timing diagram.

STATIC ELECTRICAL CHARACTERISTICS

CHARACTERISTIC	CONDITIONS			LIMITS AT INDICATED TEMPERATURES (°C)							UNITS
								+25			
	V_O (V)	V_{IN} (V)	V_{DD} (V)	−55	−40	+85	+125	Min.	Typ.	Max.	
Quiescent Device Current, I_{DD} Max.	–	0,5	5	5	5	150	150	–	0.04	5	μA
	–	0,10	10	10	10	300	300	–	0.04	10	
	–	0,15	15	20	20	600	600	–	0.04	20	
	–	0,20	20	100	100	3000	3000	–	0.08	100	
Output Low (Sink) Current I_{OL} Min.	0.4	0,5	5	0.64	0.61	0.42	0.36	0.51	1	–	mA
	0.5	0,10	10	1.6	1.5	1.1	0.9	1.3	2.6	–	
	1.5	0,15	15	4.2	4	2.8	2.4	3.4	6.8	–	
Output High (Source) Current, I_{OH} Min.	4.6	0,5	5	−0.64	−0.61	−0.42	−0.36	−0.51	−1	–	
	2.5	0,5	5	−2	−1.8	−1.3	−1.15	−1.6	−3.2	–	
	9.5	0,10	10	−1.6	−1.5	−1.1	−0.9	−1.3	−2.6	–	
	13.5	0,15	15	−4.2	−4	−2.8	−2.4	−3.4	−6.8	–	
Output Voltage: Low-Level, V_{OL} Max.	–	0,5	5	0.05				–	0	0.05	V
	–	0,10	10	0.05				–	0	0.05	
	–	0,15	15	0.05				–	0	0.05	
Output Voltage: High-Level, V_{OH} Min.	–	0,5	5	4.95				4.95	5	–	
	–	0,10	10	9.95				9.95	10	–	
	–	0,15	15	14.95				14.95	15	–	
Input Low Voltage V_{IL} Max.	0.5,4.5	–	5	1.5				–	–	1.5	V
	1,9	–	10	3				–	–	3	
	1.5,13.5	–	15	4				–	–	4	
Input High Voltage, V_{IH} Min.	0.5,4.5	–	5	3.5				3.5	–	–	
	1,9	–	10	7				7	–	–	
	1.5,13.5	–	15	11				11	–	–	
Input Current* I_{IN} Max.	–	0,18	18	±0.1	±0.1	±1	±1	–	$±10^{-5}$	±0.1	μA
3-State Output Leakage Current I_{OUT} Max.	0,18	0,18	18	±0.4	±0.4	±12	±12	–	$±10^{-4}$	±0.4	μA

* All inputs except A and B Lines.

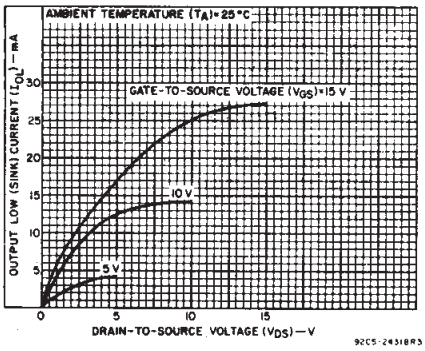

Fig. 5 – Typical output low (sink) current characteristics.

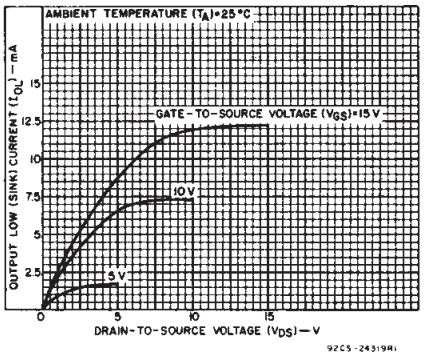

Fig. 6 – Minimum output low (sink) current characteristics.

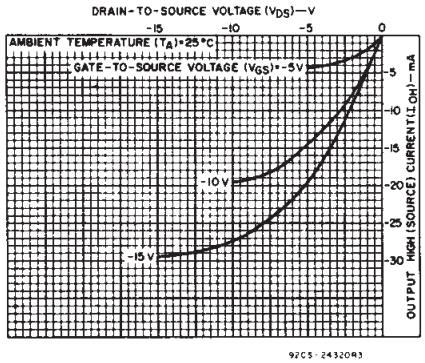

Fig. 7 – Typical output high (source) current characteristics.

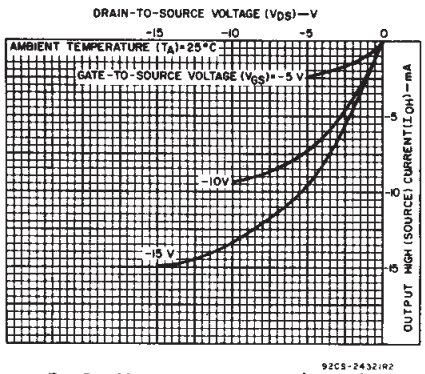

Fig. 8 – Minimum output high (source) current characteristics.

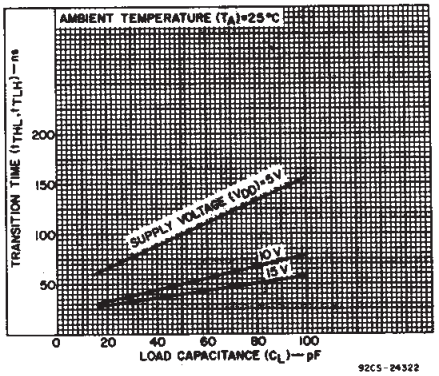

Fig. 9 – Typical transition time as a function of load capacitance.

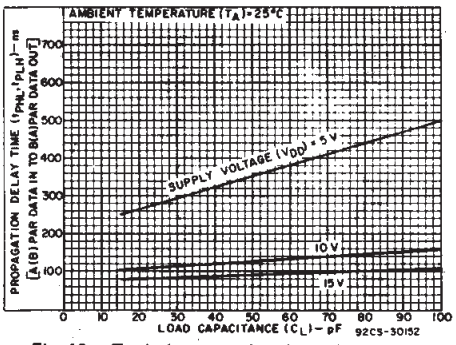

Fig. 10 – Typical propagation delay time as a function of load capacitance [A(B) parallel Data Input to B(A) parallel Data Output, synchronous or asynchronous].

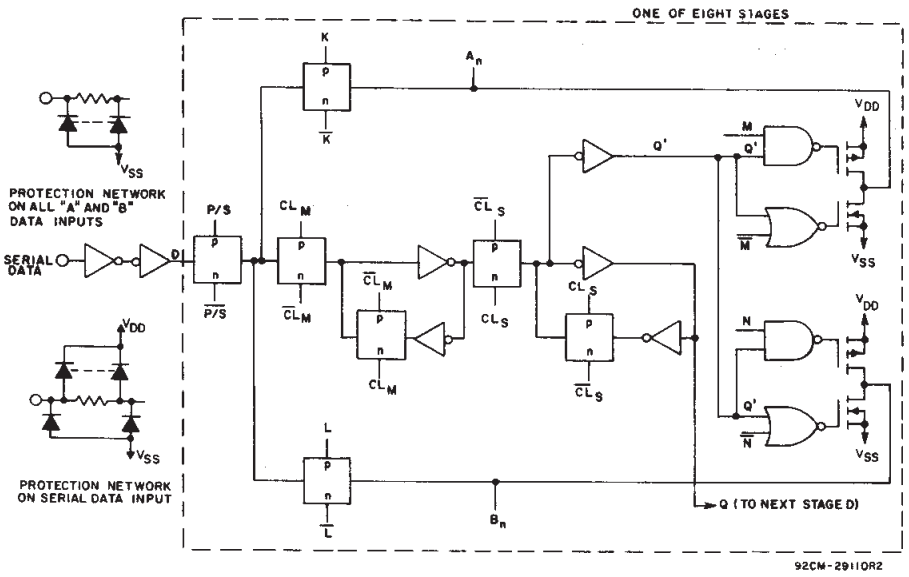

Fig. 11 – Register stage logic diagram (1 of 8 stages).

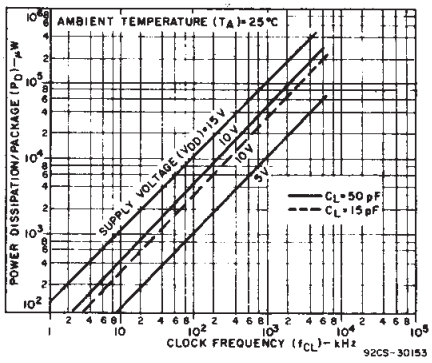

Fig. 12 – Typical dynamic power dissipation as a function of clock frequency.

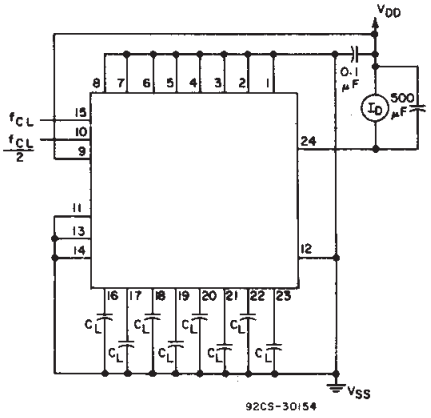

Fig. 13 – Dynamic power dissipation test circuit.

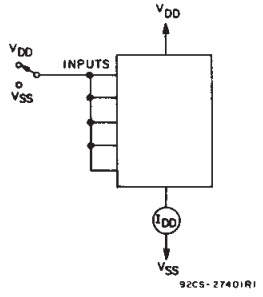

Fig. 14 – Quiescent-device-current test circuit.

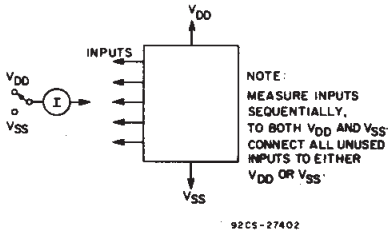

Fig. 15 – Input-current test circuit.

TRUTH TABLE FOR REGISTER INPUT-LEVELS AND RESULTING REGISTER OPERATION

"A" Enable	P/S	A/B	A/S	Operation*
0	0	0	X	Serial Mode; Synch. Serial Data Input, "A" Parallel Data Outputs Disabled
0	0	1	X	Serial Mode; Synch. Serial Data Input, "B" Parallel Data Output
0	1	0	0	Parallel Mode; "B" Synch. Parallel Data Inputs, "A" Parallel Data Outputs Disabled
0	1	0	1	Parallel Mode; "B" Asynch. Parallel Data Inputs, "A" Parallel Data Outputs Disabled
0	1	1	0	Parallel Mode; "A" Parallel Data Inputs Disabled, "B" Parallel Data Outputs, Synch. Data Recirculation
0	1	1	1	Parallel Mode; "A" Parallel Data Inputs Disabled, "B" Parallel Data Outputs, Asynch. Data Recirculation
1	0	0	X	Serial Mode; Synch. Serial Data Input, "A" Parallel Data Output
1	0	1	X	Serial Mode; Synch. Serial Data Input, "B" Parallel Data Output
1	1	0	0	Parallel Mode; "B" Synch. Parallel Data Input, "A" Parallel Data Output
1	1	0	1	Parallel Mode; "B" Asynch. Parallel Data Input, "A" Parallel Data Output
1	1	1	0	Parallel Mode; "A" Synch. Parallel Data Input, "B" Parallel Data Output
1	1	1	1	Parallel Mode; "A" Asynch. Parallel Data Input, "B" Parallel Data Output

*Outputs change at positive transition of clock in the serial mode and when the A/S control input is "low" in the parallel mode. During transfer from parallel to serial operation A/S should remain low in order to prevent D_S transfer into Flip Flops.

1 = HIGH LEVEL 0 = LOW LEVEL X = DON'T CARE

DYNAMIC ELECTRICAL CHARACTERISTICS *at T_A = 25°C; Input t_r, t_f = 20 ns, C_L = 50 pF, R_L = 200 kΩ*

CHARACTERISTIC		V_{DD} (V)	LIMITS			UNITS
			MIN.	TYP.	MAX.	
Propagation Delay Time, A(B) Parallel Data In to B(A) Parallel Data Out	t_{PHL}, t_{PLH}	5	—	350	700	ns
		10	—	120	240	
		15	—	85	170	
Serial to Parallel Data Out						
3-State Propagation Delay A/B or AE to "A" OUT	t_{PLZ}, t_{PHZ}	5	—	200	400	
	t_{PZL}, t_{PZH}	10	—	80	160	
		15	—	60	120	
Transition Time,	t_{THL}, t_{TLH}	5	—	100	200	
		10	—	50	100	
		15	—	40	80	
Minimum Data Setup Time, Serial Data to Clock	t_{SU}	5	—	80	160	
		10	—	30	60	
		15	—	20	40	
Parallel Data to Clock		5	—	25	50	
		10	—	15	30	
		15	—	10	20	
Minimum Data Hold Time,	t_H	5	—	—	50	
		10	—	—	15	
		15	—	—	10	
Minimum High-Level Pulse Width, AE, P/S, A/S	t_W	5	—	175	350	
		10	—	70	140	
		15	—	40	80	
Maximum Clock Frequency,	f_{CL}	5	2	4	—	MHz
		10	5	10	—	
		15	7	14	—	
Minimum Clock Pulse Width,	t_W	5	—	125	250	ns
		10	—	50	100	
		15	—	35	70	
Maximum Clock Rise or Fall Time,	t_rCL, t_fCL*	5,10,15	—	—	15	μs
Input Capacitance,	C_{IN}	Any Input	—	5	7.5	pF

*If more than one unit is cascaded t_rCL should be made less than or equal to the sum of the transition time and the fixed propagation delay of the output of the driving stage for the estimated capacitive load.

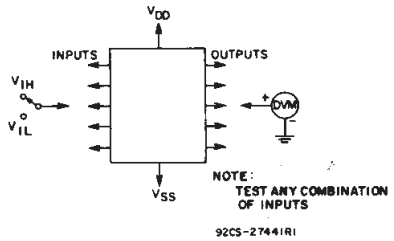

Fig. 16 — Input-voltage test circuit.

Applications

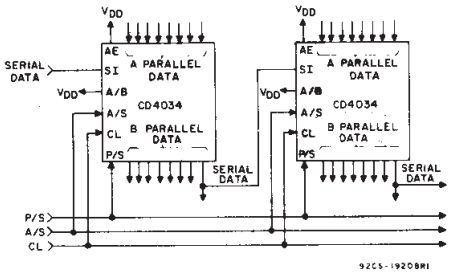

Fig. 17 — 16-bit parallel in/parallel out, parallel in/serial out, serial in/parallel out, serial in/serial out register.

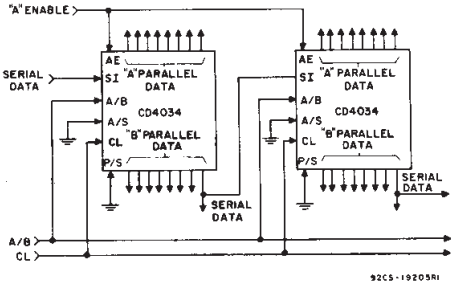

Fig. 18 — 16-bit serial in/gated parallel out register.

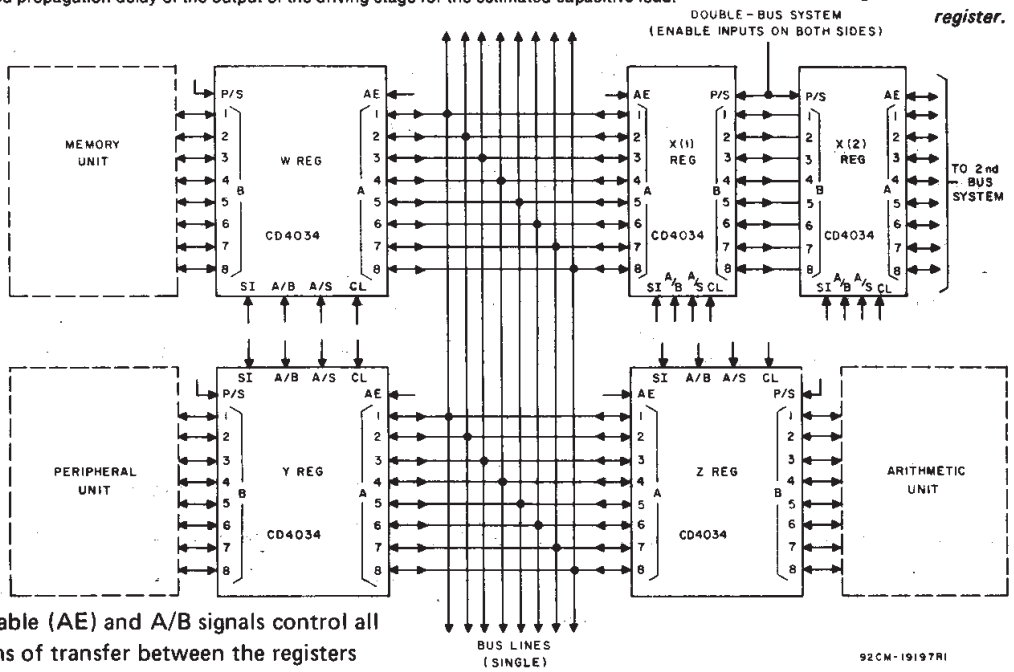

The "A" enable (AE) and A/B signals control all combinations of transfer between the registers and bus systems.

Fig. 19 — Single- and double-bus systems.

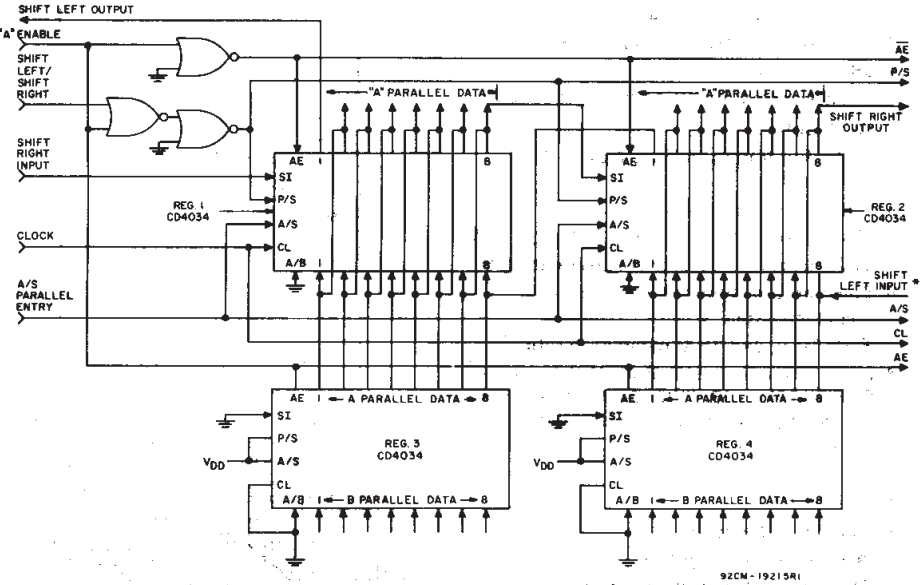

A "High" ("Low") on the shift Left/Shift Right input allows serial data on the Shift Left Input (Shift Right Input) to enter the register on the positive transition of the clock signal. A "high" on the "A" Enable Input disables the "A" parallel data lines on Reg. 1 and 2 and enables the "A" data lines on registers 3 and 4 and allows parallel data into registers 1 and 2. Other logic schemes may be used in place of registers 3 and 4 for parallel loading.

When parallel inputs are not used Reg. 3 and 4 and associated logic are not required.

* Shift left input must be disabled during parallel entry.

Fig. 20 — Shift right/shift left with parallel inputs.

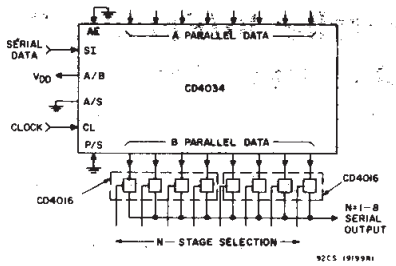

Fig. 21 — N-stage shift register with fixed serial output line.

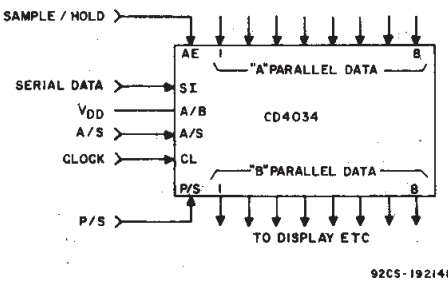

Fig. 22 — Sample and hold register—serial/parallel in—parallel out.

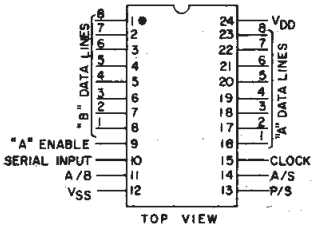

TERMINAL DIAGRAM

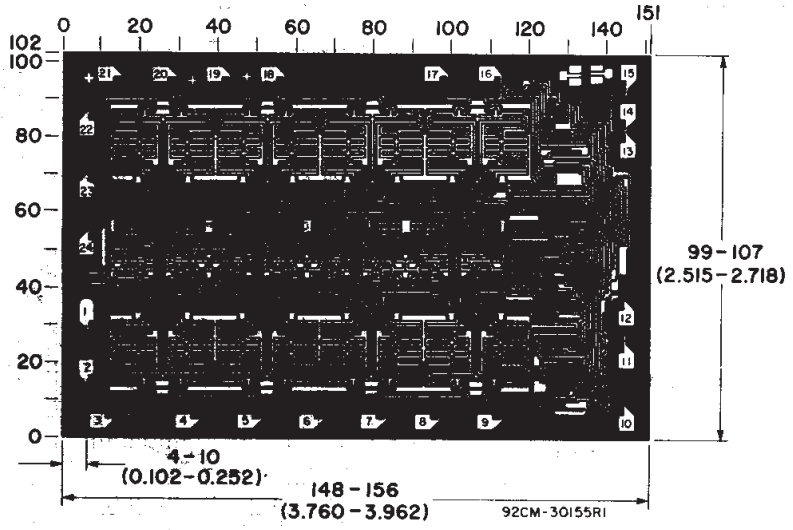

Dimensions in parentheses are in millimeters and are derived from the basic inch dimensions as indicated. Grid graduations are in mils (10^{-3} inch).

Dimensions and pad layout for CD4034BH.

PACKAGING INFORMATION

Orderable Device	Status (1)	Package Type	Package Drawing	Pins	Package Qty	Eco Plan (2)	Lead/Ball Finish (6)	MSL Peak Temp (3)	Op Temp (°C)	Device Marking (4/5)	Samples
CD4034BF3A	ACTIVE	CDIP	J	24	1	TBD	Call TI	N / A for Pkg Type	-55 to 125	CD4034BF3A	Samples
CD4034BM	ACTIVE	SOIC	DW	24	25	Green (RoHS & no Sb/Br)	CU NIPDAU	Level-1-260C-UNLIM	-55 to 125	CD4034BM	Samples

(1) The marketing status values are defined as follows:
ACTIVE: Product device recommended for new designs.
LIFEBUY: TI has announced that the device will be discontinued, and a lifetime-buy period is in effect.
NRND: Not recommended for new designs. Device is in production to support existing customers, but TI does not recommend using this part in a new design.
PREVIEW: Device has been announced but is not in production. Samples may or may not be available.
OBSOLETE: TI has discontinued the production of the device.

(2) Eco Plan - The planned eco-friendly classification: Pb-Free (RoHS), Pb-Free (RoHS Exempt), or Green (RoHS & no Sb/Br) - please check http://www.ti.com/productcontent for the latest availability information and additional product content details.
TBD: The Pb-Free/Green conversion plan has not been defined.
Pb-Free (RoHS): TI's terms "Lead-Free" or "Pb-Free" mean semiconductor products that are compatible with the current RoHS requirements for all 6 substances, including the requirement that lead not exceed 0.1% by weight in homogeneous materials. Where designed to be soldered at high temperatures, TI Pb-Free products are suitable for use in specified lead-free processes.
Pb-Free (RoHS Exempt): This component has a RoHS exemption for either 1) lead-based flip-chip solder bumps used between the die and package, or 2) lead-based die adhesive used between the die and leadframe. The component is otherwise considered Pb-Free (RoHS compatible) as defined above.
Green (RoHS & no Sb/Br): TI defines "Green" to mean Pb-Free (RoHS compatible), and free of Bromine (Br) and Antimony (Sb) based flame retardants (Br or Sb do not exceed 0.1% by weight in homogeneous material)

(3) MSL, Peak Temp. - The Moisture Sensitivity Level rating according to the JEDEC industry standard classifications, and peak solder temperature.

(4) There may be additional marking, which relates to the logo, the lot trace code information, or the environmental category on the device.

(5) Multiple Device Markings will be inside parentheses. Only one Device Marking contained in parentheses and separated by a "~" will appear on a device. If a line is indented then it is a continuation of the previous line and the two combined represent the entire Device Marking for that device.

(6) Lead/Ball Finish - Orderable Devices may have multiple material finish options. Finish options are separated by a vertical ruled line. Lead/Ball Finish values may wrap to two lines if the finish value exceeds the maximum column width.

Important Information and Disclaimer: The information provided on this page represents TI's knowledge and belief as of the date that it is provided. TI bases its knowledge and belief on information provided by third parties, and makes no representation or warranty as to the accuracy of such information. Efforts are underway to better integrate information from third parties. TI has taken and continues to take reasonable steps to provide representative and accurate information but may not have conducted destructive testing or chemical analysis on incoming materials and chemicals. TI and TI suppliers consider certain information to be proprietary, and thus CAS numbers and other limited information may not be available for release.

In no event shall TI's liability arising out of such information exceed the total purchase price of the TI part(s) at issue in this document sold by TI to Customer on an annual basis.

OTHER QUALIFIED VERSIONS OF CD4034B, CD4034B-MIL :

- Catalog: CD4034B
- Military: CD4034B-MIL

NOTE: Qualified Version Definitions:

- Catalog - TI's standard catalog product
- Military - QML certified for Military and Defense Applications

MCDI004A – JANUARY 1995 – REVISED NOVEMBER 1997

J (R-GDIP-T**)

CERAMIC DUAL-IN-LINE PACKAGE

24 PINS SHOWN

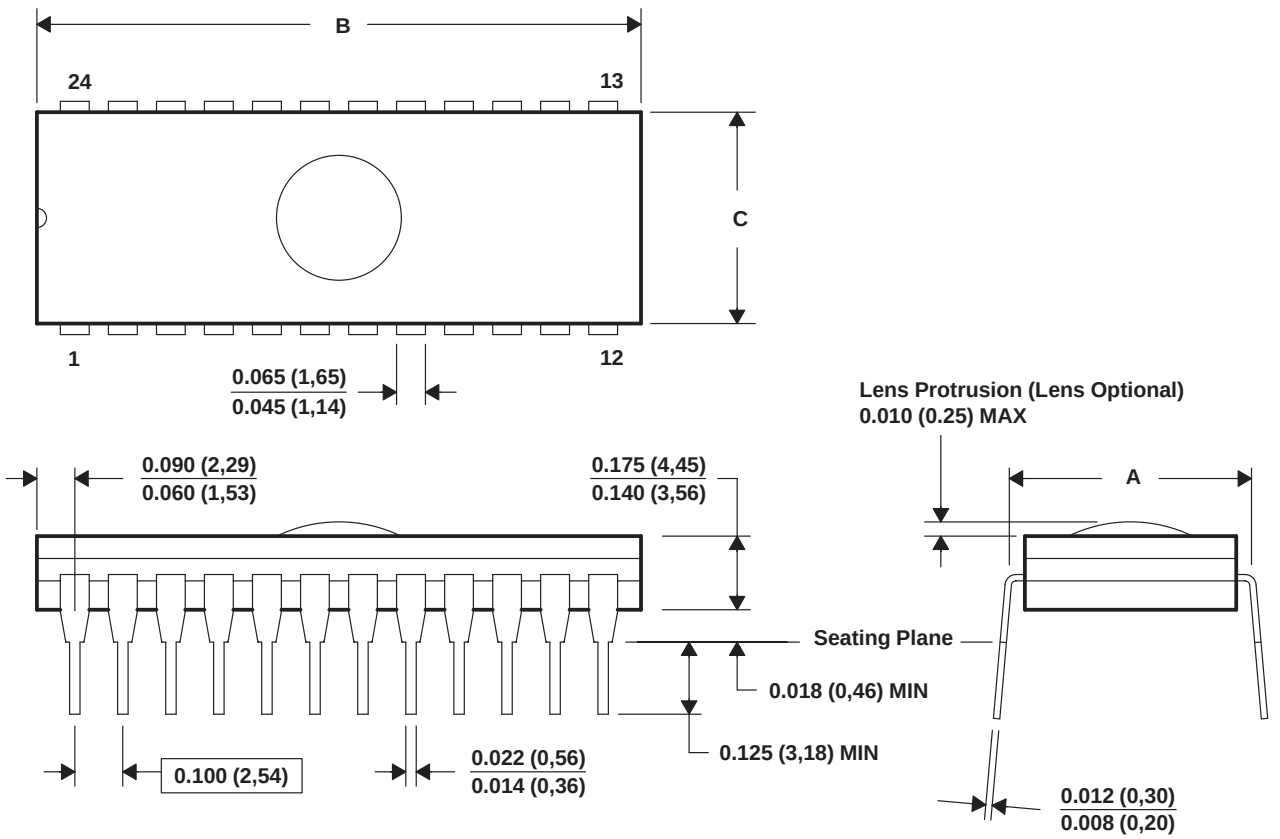

DIM \ PINS **		24		28		32		40	
		NARR	WIDE	NARR	WIDE	NARR	WIDE	NARR	WIDE
"A"	MAX	0.624(15,85)	0.624(15,85)	0.624(15,85)	0.624(15,85)	0.624(15,85)	0.624(15,85)	0.624(15,85)	0.624(15,85)
	MIN	0.590(14,99)	0.590(14,99)	0.590(14,99)	0.590(14,99)	0.590(14,99)	0.590(14,99)	0.590(14,99)	0.590(14,99)
"B"	MAX	1.265(32,13)	1.265(32,13)	1.465(37,21)	1.465(37,21)	1.668(42,37)	1.668(42,37)	2.068(52,53)	2.068(52,53)
	MIN	1.235(31,37)	1.235(31,37)	1.435(36,45)	1.435(36,45)	1.632(41,45)	1.632(41,45)	2.032(51,61)	2.032(51,61)
"C"	MAX	0.541(13,74)	0.598(15,19)	0.541(13,74)	0.598(15,19)	0.541(13,74)	0.598(15,19)	0.541(13,74)	0.598(15,19)
	MIN	0.514(13,06)	0.571(14,50)	0.514(13,06)	0.571(14,50)	0.514(13,06)	0.571(14,50)	0.514(13,06)	0.571(14,50)

4040084/C 10/97

NOTES: A. All linear dimensions are in inches (millimeters).
B. This drawing is subject to change without notice.
C. Window (lens) added to this group of packages (24-, 28-, 32-, 40-pin).
D. This package can be hermetically sealed with a ceramic lid using glass frit.
E. Index point is provided on cap for terminal identification.

DW (R–PDSO–G24) PLASTIC SMALL OUTLINE

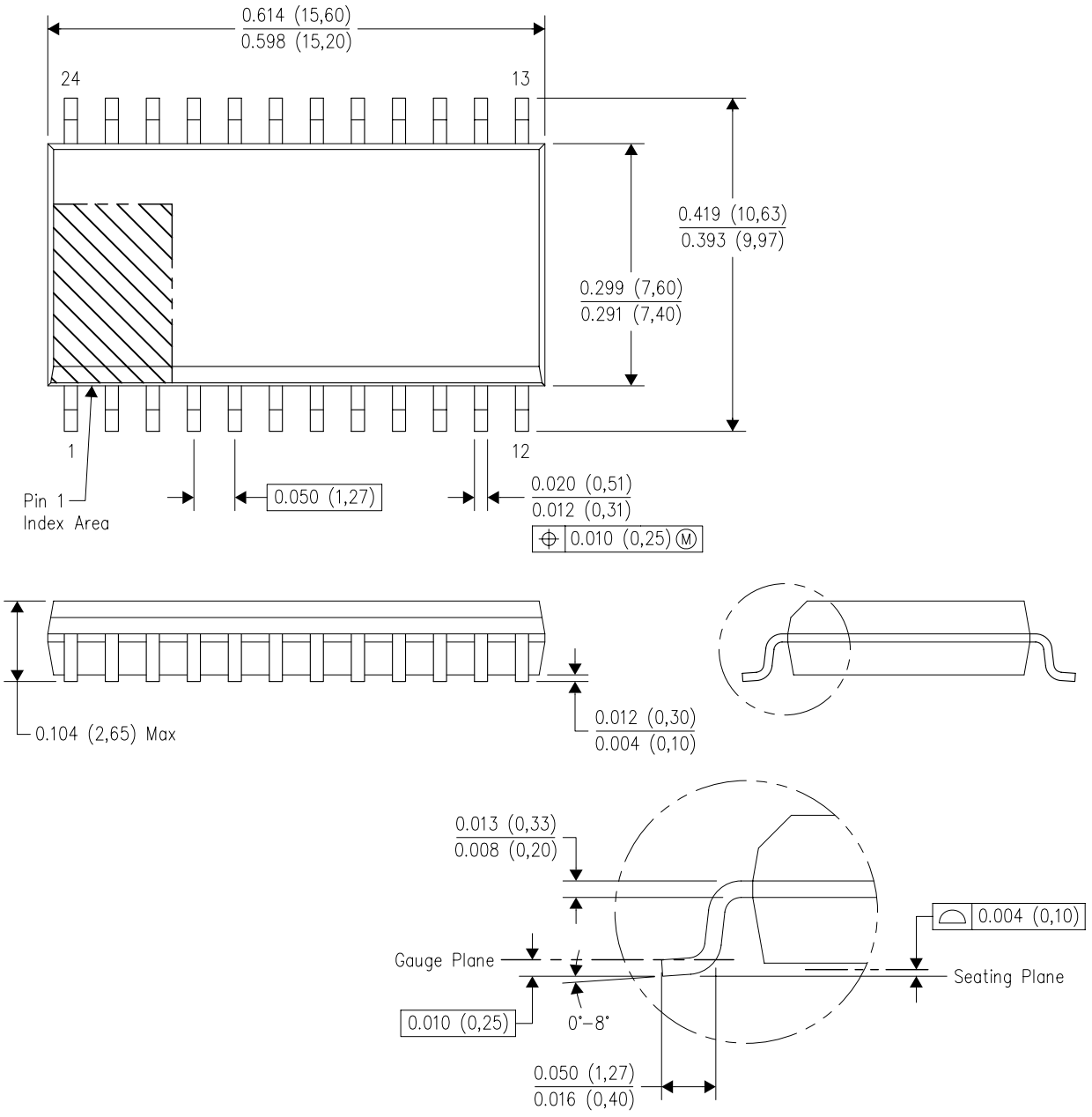

NOTES:
A. All linear dimensions are in inches (millimeters). Dimensioning and tolerancing per ASME Y14.5M–1994.
B. This drawing is subject to change without notice.
C. Body dimensions do not include mold flash or protrusion not to exceed 0.006 (0,15).
D. Falls within JEDEC MS–013 variation AD.

IMPORTANT NOTICE

Texas Instruments Incorporated and its subsidiaries (TI) reserve the right to make corrections, enhancements, improvements and other changes to its semiconductor products and services per JESD46, latest issue, and to discontinue any product or service per JESD48, latest issue. Buyers should obtain the latest relevant information before placing orders and should verify that such information is current and complete. All semiconductor products (also referred to herein as “components”) are sold subject to TI’s terms and conditions of sale supplied at the time of order acknowledgment.

TI warrants performance of its components to the specifications applicable at the time of sale, in accordance with the warranty in TI’s terms and conditions of sale of semiconductor products. Testing and other quality control techniques are used to the extent TI deems necessary to support this warranty. Except where mandated by applicable law, testing of all parameters of each component is not necessarily performed.

TI assumes no liability for applications assistance or the design of Buyers’ products. Buyers are responsible for their products and applications using TI components. To minimize the risks associated with Buyers’ products and applications, Buyers should provide adequate design and operating safeguards.

TI does not warrant or represent that any license, either express or implied, is granted under any patent right, copyright, mask work right, or other intellectual property right relating to any combination, machine, or process in which TI components or services are used. Information published by TI regarding third-party products or services does not constitute a license to use such products or services or a warranty or endorsement thereof. Use of such information may require a license from a third party under the patents or other intellectual property of the third party, or a license from TI under the patents or other intellectual property of TI.

Reproduction of significant portions of TI information in TI data books or data sheets is permissible only if reproduction is without alteration and is accompanied by all associated warranties, conditions, limitations, and notices. TI is not responsible or liable for such altered documentation. Information of third parties may be subject to additional restrictions.

Resale of TI components or services with statements different from or beyond the parameters stated by TI for that component or service voids all express and any implied warranties for the associated TI component or service and is an unfair and deceptive business practice. TI is not responsible or liable for any such statements.

Buyer acknowledges and agrees that it is solely responsible for compliance with all legal, regulatory and safety-related requirements concerning its products, and any use of TI components in its applications, notwithstanding any applications-related information or support that may be provided by TI. Buyer represents and agrees that it has all the necessary expertise to create and implement safeguards which anticipate dangerous consequences of failures, monitor failures and their consequences, lessen the likelihood of failures that might cause harm and take appropriate remedial actions. Buyer will fully indemnify TI and its representatives against any damages arising out of the use of any TI components in safety-critical applications.

In some cases, TI components may be promoted specifically to facilitate safety-related applications. With such components, TI’s goal is to help enable customers to design and create their own end-product solutions that meet applicable functional safety standards and requirements. Nonetheless, such components are subject to these terms.

No TI components are authorized for use in FDA Class III (or similar life-critical medical equipment) unless authorized officers of the parties have executed a special agreement specifically governing such use.

Only those TI components which TI has specifically designated as military grade or “enhanced plastic” are designed and intended for use in military/aerospace applications or environments. Buyer acknowledges and agrees that any military or aerospace use of TI components which have ***not*** been so designated is solely at the Buyer's risk, and that Buyer is solely responsible for compliance with all legal and regulatory requirements in connection with such use.

TI has specifically designated certain components as meeting ISO/TS16949 requirements, mainly for automotive use. In any case of use of non-designated products, TI will not be responsible for any failure to meet ISO/TS16949.

Products		**Applications**	
Audio	www.ti.com/audio	Automotive and Transportation	www.ti.com/automotive
Amplifiers	amplifier.ti.com	Communications and Telecom	www.ti.com/communications
Data Converters	dataconverter.ti.com	Computers and Peripherals	www.ti.com/computers
DLP® Products	www.dlp.com	Consumer Electronics	www.ti.com/consumer-apps
DSP	dsp.ti.com	Energy and Lighting	www.ti.com/energy
Clocks and Timers	www.ti.com/clocks	Industrial	www.ti.com/industrial
Interface	interface.ti.com	Medical	www.ti.com/medical
Logic	logic.ti.com	Security	www.ti.com/security
Power Mgmt	power.ti.com	Space, Avionics and Defense	www.ti.com/space-avionics-defense
Microcontrollers	microcontroller.ti.com	Video and Imaging	www.ti.com/video
RFID	www.ti-rfid.com		
OMAP Applications Processors	www.ti.com/omap	**TI E2E Community**	e2e.ti.com
Wireless Connectivity	www.ti.com/wirelessconnectivity		

Mailing Address: Texas Instruments, Post Office Box 655303, Dallas, Texas 75265
Copyright © 2015, Texas Instruments Incorporated