TELEDYNE
COAX SWITCHES
Everywhereyoulook™

Series CCP-33D

Low PIM DC–3 GHz
Failsafe SPDT Coaxial Switch

PART NUMBER	DESCRIPTION
CCP-33D	Commercial Failsafe SPDT, DC-3GHz, Low PIM

These switches have extremely low passive intermodulation for use in narrow bandwidth communications applications. The CCP-33D is a broadband, SPDT, electromechanical, coaxial switch designed to switch a microwave signal from a common input to either of two outputs. The characteristic impedance is 50 Ohms.

The CCP-33D series switch is offered with a failsafe actuator and a 7/16 DIN female connector.



RoHS or Non-RoHS: Your Choice!

ENVIRONMENTAL AND PHYSICAL CHARACTERISTICS

Operating Temperature	–40°C to 65°C
Vibration (MIL-STD-202 Method 214, Condition D, non-operating)	10 g's RMS
Shock (MIL-STD-202 Method 213, Condition D, non-operating)	500 g's
Standard Actuator Life	1,000,000 cycles
Connector Type	7/16 DIN
Humidity (Moisture Seal)	Available
Weight	6 oz. (170.1g) (max.)

ELECTRICAL CHARACTERISTICS

Form Factor	SPDT, break before make				
Frequency Range	DC–3 GHz				
Characteristic Impedance	50 Ohms				
Switching Time	20 ms (max.)				
Actuation Voltage Available	12	15	24	28	V
Actuation Current, max. @ ambient	400	450	180	200	mA

PERFORMANCE CHARACTERISTICS

Frequency	DC–3 GHz
Insertion Loss, dB, max.	0.35
Isolation, dB, min.	70
VSWR , max.	1.30:1
RF Power (cw), W, max.	200

PASSIVE INTERMODULATION CHARACTERISTICS

Tone 1 Frequency (MHz)	Tone 2 Frequency (MHz)	IM3 Frequency (MHz)	PIM Threshold (dBc)
1945	1990	1900	-140.0

P1 P2 (dBm)	PIM (dBc)	PEAK PIM (dBc)
43	-166.8	-165.6

PART NUMBERING SYSTEM

CCP-33 D 1 C - T **

- Series: CCP-33
- Connectors: D
- Actuator Voltage: 1
- Actuator Type: C
- Options: T

Connector
D: 7/16 Female

Actuator Voltage
1: 28 Vdc Failsafe
2: 15 Vdc Failsafe
3: 12 Vdc Failsafe
4: 24 Vdc Failsafe

Actuator Type
0: Standard Contacts
C: Indicator Contacts

**SEE PARTS LIST ON PAGE 6

Options
T: TTL Drivers with Diodes
D: Transient Suppression Diodes
M: Moisture Seal
S: 9 Pin D-Sub Connector

For additional options, contact factory.

© 2013 TELEDYNE RELAYS

SCHEMATICS AND MECHANICAL OUTLINE

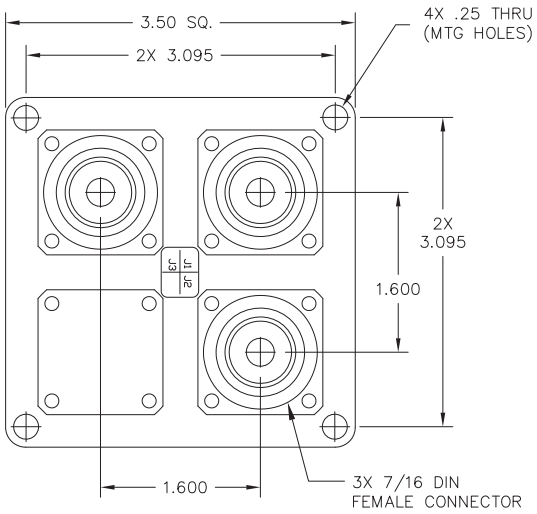

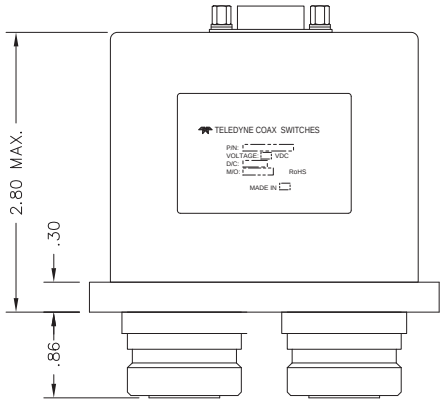

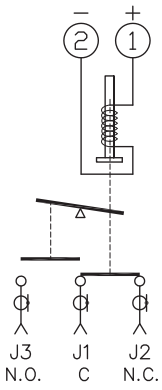

SCHEMATIC

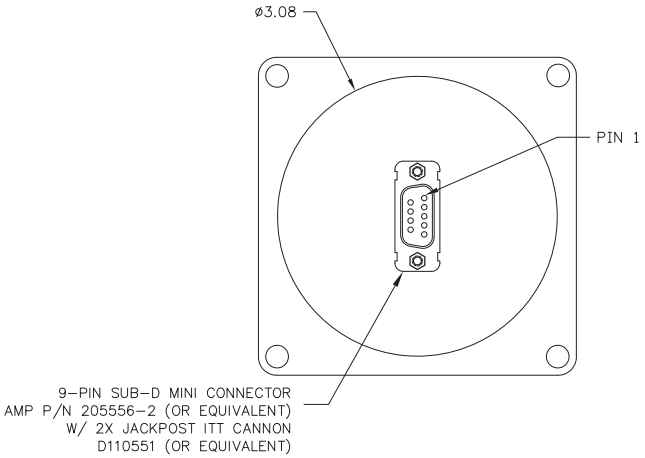

9 PIN D-SUB PINOUT FOR FAILSAFE SPDT

OPTIONS				
Pin No.	Basic	Indicators	TTL	Indicators & TTL
1	+	+		
2	-	-		
3			Common	Common
4			1	1
5				
6			Vsw	Vsw
7		A		A
8		B		B
9		C		C

TRUTH TABLE (with TTL option)

Logic Input	RF Path		Indicator (if applicable)	
1	IN to 1	IN to 2	A	B
0	On	Off	C	0
1	Off	On	0	C

SPECIFICATIONS ARE SUBJECT TO CHANGE WITHOUT NOTICE
© 2013 TELEDYNE COAX SWITCHES

TYPICAL BROADBAND RF PERFORMANCE CURVES

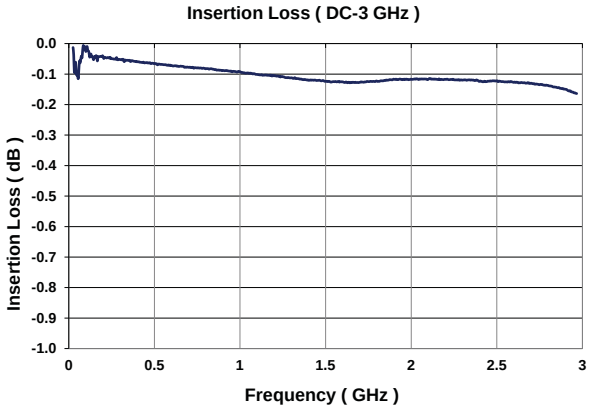

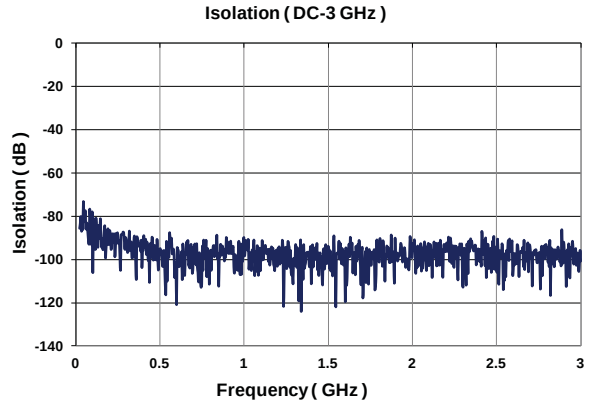

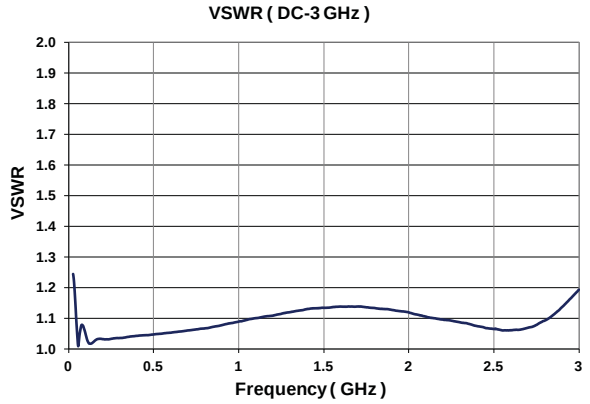

RF NOTES

TYPICAL POWER PERFORMANCE CURVE

Power Handling vs. Frequency

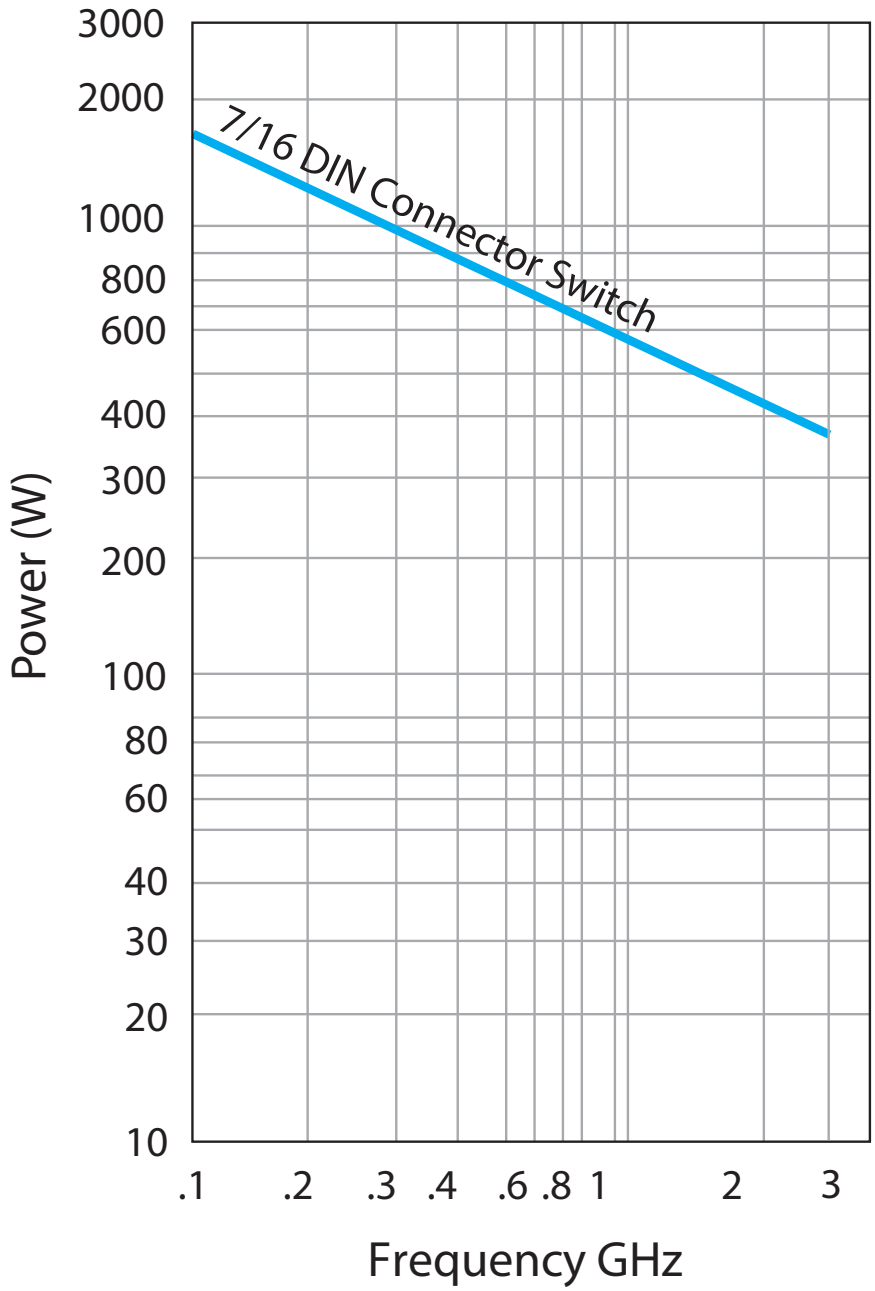

Estimates based on the following reference conditions:
- Ambient temperature of 40°C or less
- Sea level operation
- Load VSWR of 1.20:1 maximum
- No high-power (hot) switching

Please contact Teledyne Coax Switches for derating factors when applications do not meet the foregoing reference conditions.

SPECIFICATIONS ARE SUBJECT TO CHANGE WITHOUT NOTICE © 2013 TELEDYNE COAX SWITCHES

GLOSSARY

Actuator
An actuator is the electromechanical mechanism that transfers the RF contacts from one position to another upon DC command.

Arc Suppression Diode
A diode is connected in parallel with the coil. This diode limits the "reverse EMF spike" generated when the coil de-energizes to 0.7 volts. The diode cathode is connected to the positive side of the coil and the anode is connected to the negative side.

Date Code
All switches are marked with either a unique serial number or a date code. Date codes are in accordance with MIL-STD-1285 Paragraph 5.2.5 and consist of four digits. The first two digits define the year and the last two digits define the week of the year (YYWW). Thus, 1032 identifies switches that passed through final inspection during the 32nd week of 2010.

Failsafe
A failsafe switch reverts to the default or failsafe position when actuating voltage is removed. This is realized by a return spring within the drive mechanism. This type of switch requires the continuous application of operating voltage to select and hold any position. (Multi-position switches are normally open with no voltage applied).

Indicator
Indicators tell the system which position the switch is in. Other names for indicators are telemetry contacts or tellback circuit. Indicators are usually a set of internally mounted DC contacts linked to the actuator. They can be wired to digital input lines, status lights, or interlocks. Unless otherwise specified, the maximum indicator contact rating is 30 Vdc, 50 mA, or 1.5 Watts into a resistive load.

Isolation
Isolation is the measure of the power level at the output connector of an unconnected RF channel as referenced to the power at the input connector. It is specified in dB below the input power level.

SPDT Switch
A single-pole double-throw, bi-directional switch that can be used as having one input and two outputs or two inputs and one output.

Switching Time
Switching time is the total interval beginning with the arrival of the leading edge of the command pulse at the switch DC input and ending with the completion of the switch transfer, including contact bounce. It consists of three parts: (1) inductive delay in the coil, (2) transfer time of the physical movement of the contacts, and (3) the bounce time of the RF contacts.

TTL Switch Driver Option
As a special option, switch drivers can be provided for both failsafe and latching switches, which are compatible with industry-standard low-power Schottky TTL circuits.

Performance Parameters vs Frequency
Generally speaking, the RF performance of coaxial switches is frequency dependent. With increasing frequency, VSWR and insertion loss increase while isolation decreases. All data sheets specify these three parameters as "worst case" at the highest operating frequency. If the switch is to be used over a narrow frequency band, better performance can be achieved.

Actuator Current vs Temperature
The resistance of the actuator coil varies as a function of temperature. There is an inverse relationship between the operating temperature of the switch and the actuator drive current. For switches operating at 28 VDC, the approximate actuator drive current at temperature, T, can be calculated using the equation:

$$I_T = \frac{I_A}{[1 + .00385\ (T-20)]}$$

Where:

I_T = Actuator current at temperature, T

I_A = Room temperature actuator current – see data sheet

T = Temperature of interest in °C

Magnetic Sensitivity
An electro-mechanical switch can be sensitive to ferrous materials and external magnetic fields. Neighboring ferrous materials should be permitted no closer than 0.5 inches and adjacent external magnetic fields should be limited to a flux density of less than 5 Gauss.

FAILSAFE CCP-33D PART NUMBER LIST

	Part No.
1	CCP-33DXC
2	CCP-33DXC-D
3	CCP-33DXC-DM
4	CCP-33DXC-DMS
5	CCP-33DXC-DS
6	CCP-33DXC-M
7	CCP-33DXC-MS
8	CCP-33DXC-S
9	CCP-33DXC-T
10	CCP-33DXC-TM
11	CCP-33DXC-TMS
12	CCP-33DXC-TS
13	CCP-33DX0
14	CCP-33DX0-D
15	CCP-33DX0-DM
16	CCP-33DX0-DMS
17	CCP-33DX0-DS
18	CCP-33DX0-M
19	CCP-33DX0-MS
20	CCP-33DX0-S
21	CCP-33DX0-T
22	CCP-33DX0-TM
23	CCP-33DX0-TMS
24	CCP-33DX0-TS

* X = 1 (28Vdc), 2 (15Vdc), 3 (12Vdc) and 4 (24Vdc)

SPECIFICATIONS ARE SUBJECT TO CHANGE WITHOUT NOTICE © 2013 TELEDYNE COAX SWITCHES