TELEDYNE
COAX SWITCHES
Everywhereyoulook™

Series CCP-18D

Low PIM Multi-Throw DC–3 GHz Normally Open Coaxial Switch

PART NUMBER	DESCRIPTION
CCP-18D	Commercial Normally Open Multi-throw, DC-3GHz, Low PIM

These switches have extremely low passive intermodulation for use in narrow bandwidth communications applications.

The CCP-18D is a broadband multi-position coaxial switch designed to switch RF signals from one input port to any one of 3 or 4 output ports. It is designed for 50 Ohms transmission line systems. The standard actuator gives individual solenoid control of each position and when de-energized, all positions are open.

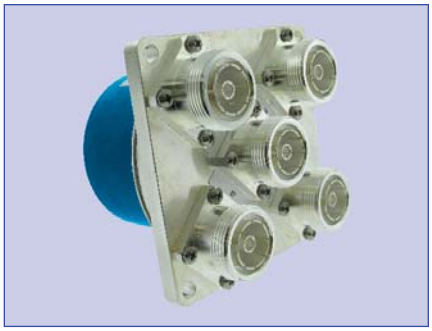

RoHS or Non-RoHS: Your Choice!

ENVIRONMENTAL AND PHYSICAL CHARACTERISTICS

Operating Temperature	–40°C to 65°C
Vibration (MIL-STD-202 Method 214, Condition D, non-operating)	10 g's RMS
Shock (MIL-STD-202 Method 213, Condition D, non-operating)	500 g's
Standard Actuator Life	1,000,000 cycles
Connector Type	7/16 DIN
Humidity (Moisture Seal)	Available
Weight	9 oz. (255.2g) (max.)

ELECTRICAL CHARACTERISTICS

Form Factor	Multi-Throw, break before make				
Frequency Range	DC–3 GHz				
Characteristic Impedance	50 Ohms				
Switching Time	20 ms (max.)				
Actuation Voltage Available	12	15	24	28	V
Actuation Current, max. @ ambient	600	480	300	270	mA

PERFORMANCE CHARACTERISTICS

Frequency	DC–3 GHz
Insertion Loss, dB, max.	0.35
Isolation, dB, min.	70
VSWR , max.	1.3:1
RF Power (cw), W, max.	200

PASSIVE INTERMODULATION CHARACTERISTICS

Tone 1 Frequency (MHz)	Tone 2 Frequency (MHz)	IM3 Frequency (MHz)	PIM Threshold (dBc)
1945	1990	1900	-140.0

P1 P2 (dBm)	PIM (dBc)	PEAK PIM (dBc)
43	-159.6	-156.6

PART NUMBERING SYSTEM

CCP-18 D 1 3 C - T**

- Series: CCP-18
- Connectors: D
- Actuator Voltage: 1
- Number of Positions: 3
- Actuator Type: C
- Options: T

CONNECTOR

D: 7/16 FEMALE

ACTUATOR VOLTAGE

1: 28 VDC NORMALLY OPEN
2: 15 VDC NORMALLY OPEN
3: 12 VDC NORMALLY OPEN
4: 24 VDC NORMALLY OPEN

NUMBER OF POSITIONS

3: SP3T
4: SP4T

ACTUATOR TYPE

0: NO INDICATOR CONTACTS
C: INDICATOR CONTACTS

OPTIONS

T: TTL DRIVERS WITH DIODES
D: COIL TRANSIENT SUPPRESSION DIODES
S: D-SUB CONNECTOR*
TD: DECODERS AND TTL DRIVERS WITH DIODES
M: MOISTURE SEAL

**SEE PARTS LIST ON PAGE 8

For additional options, please contact factory.

*** 15 pin D-Sub Connector (See Connector Pinout page)**

© 2013 TELEDYNE RELAYS

SCHEMATICS AND MECHANICAL OUTLINE

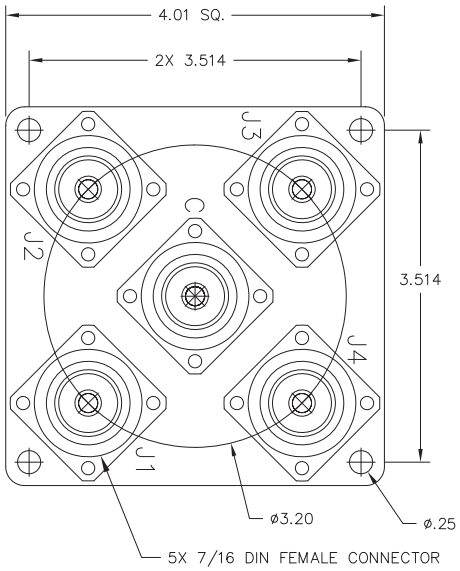

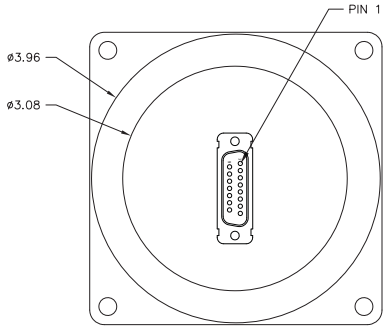

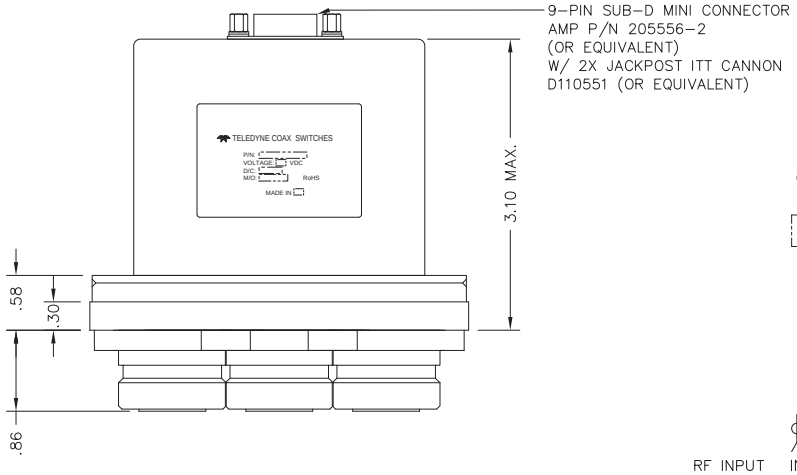

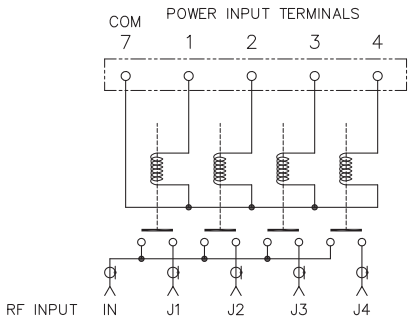

SCHEMATIC

SHOWN IN
NORMALLY OPEN POSITION

"-S OPTION" 15-PIN D-SUB CONNECTOR (EXAMPLE: CCP-18N160-S)

SPECIFICATIONS ARE SUBJECT TO CHANGE WITHOUT NOTICE
© 2013 TELEDYNE COAX SWITCHES

CONNECTOR PINOUT FOR NORMALLY OPEN SP3T MULTI-THROW SWITCHES						
Example	CCP-18D130-S	CCP-18D13C-S	CCP-18D130-TS	CCP-18D13C-TS	CCP-18D130-TDS	CCP-18D13C-TDS
Indicator		Yes		Yes		Yes
TTL			Yes	Yes		
Decoders & TTL					Yes	Yes
PIN NO.	9-Pin	9-Pin	9-Pin	9-Pin	9-Pin	9-Pin
1	Port 1	Port 1	Port 1	Port 1	Logic 1	Logic 1
2	Port 2	Port 2	Port 2	Port 2	Logic 2	Logic 2
3	Port 3	Port 3	Port 3	Port 3		
4		E Indicator		E Indicator		E Indicator
5		F Indicator		F Indicator		F Indicator
6		G Indicator		G Indicator		G Indicator
7	Common	Common	Common	Common	Common	Common
8			Vsw	Vsw	Vsw	Vsw
9		D Indicator (COM)		D Indicator (COM)		D Indicator (COM)

CONNECTOR PINOUT FOR NORMALLY OPEN SP4T MULTI-THROW SWITCHES						
Example	CCP-18D140-S	CCP-18D14C-S	CCP-18D140-TS	CCP-18D14C-TS	CCP-18D140-TDS	CCP-18D14C-TDS
Indicator		Yes		Yes		Yes
TTL			Yes	Yes		
Decoders & TTL					Yes	Yes
PIN NO.	9-Pin	15-Pin	9-Pin	15-Pin	9-Pin	15-Pin
1	Port 1	Port 1	TTL 1	TTL 1	Logic 1	Logic 1
2	Port 2	Port 2	TTL 2	TTL 2	Logic 2	Logic 2
3	Port 3	Port 3	TTL 3	TTL 3	Logic 3	Logic 3
4	Port 4	Port 4	TTL 4	TTL 4		
5						
6						
7	Common	Common	Common	Common	Common	Common
8			Vsw	Vsw	Vsw	Vsw
9		D Indicator (COM)		D Indicator (COM)		D Indicator (COM)
10	n/a	E Indicator	n/a	E Indicator	n/a	E Indicator
11		F Indicator		F Indicator		F Indicator
12		G Indicator		G Indicator		G Indicator
13		H Indicator		H Indicator		H Indicator
14						
15						

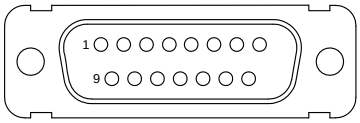

15-PIN D-SUB CONNECTOR

TRUTH TABLE Normally Open
CCP-18DX3C-T

Logic Input			RF Path			Indicator Switches		
1	2	3	J1	J2	J3	E	F	G
1	0	0	On	Off	Off	C	0	0
0	1	0	Off	On	Off	0	C	0
0	0	1	Off	Off	On	0	0	C

TRUTH TABLE Normally Open
CCP-18DX3C-TD

Logic Input		RF Path			Indicator Switches		
1	2	J1	J2	J3	E	F	G
0	0	On	Off	Off	C	0	0
1	0	Off	On	Off	0	C	0
0	1	Off	Off	On	0	0	C
1	1	Off	Off	Off	0	0	0

TRUTH TABLE Normally Open
CCP-18DX4C-T

Logic Input				RF Path				Indicator Switches			
1	2	3	4	J1	J2	J3	J4	E	F	G	H
1	0	0	0	On	Off	Off	Off	C	0	0	0
0	1	0	0	Off	On	Off	Off	0	C	0	0
0	0	1	0	Off	Off	On	Off	0	0	C	0
0	0	0	1	Off	Off	Off	On	0	0	0	C

TRUTH TABLE Normally Open
CCP-18DX4C-TD

Logic Input			RF Path				Indicator Switches			
1	2	3	J1	J2	J3	J4	E	F	G	H
0	0	0	On	Off	Off	Off	C	0	0	0
1	0	0	Off	On	Off	Off	0	C	0	0
0	1	0	Off	Off	On	Off	0	0	C	0
1	1	0	Off	Off	Off	On	0	0	0	C
1	1	1	Off	Off	Off	Off	0	0	0	0

SPECIFICATIONS ARE SUBJECT TO CHANGE WITHOUT NOTICE
© 2013 TELEDYNE COAX SWITCHES

TYPICAL BROADBAND RF PERFORMANCE CURVES

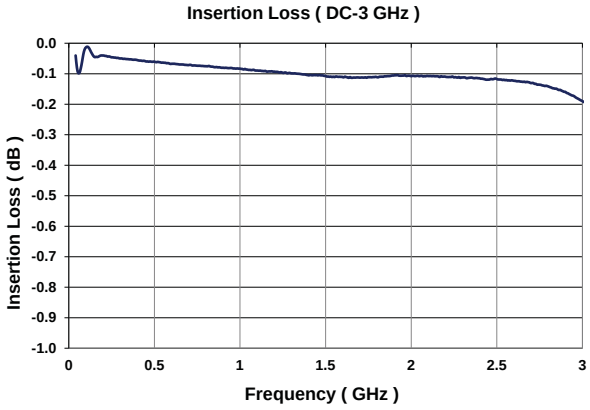

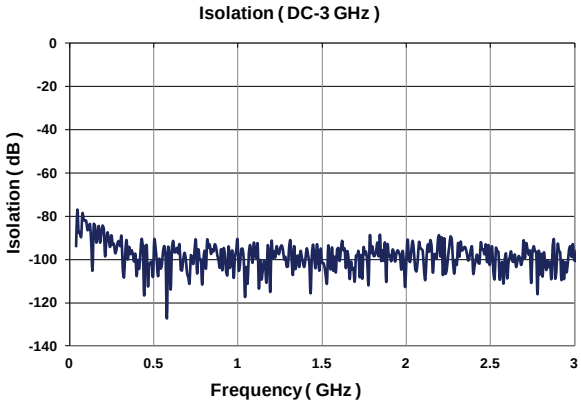

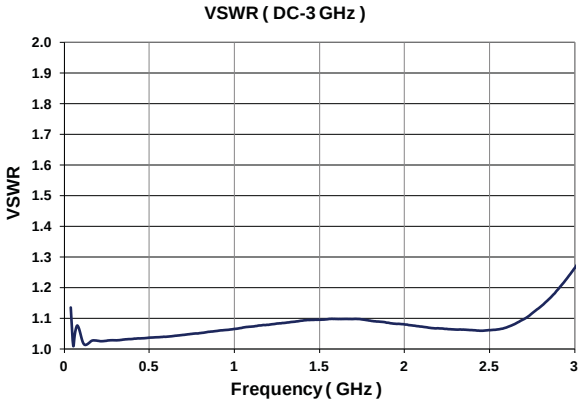

RF NOTES

TYPICAL POWER PERFORMANCE CURVE

Power Handling vs. Frequency

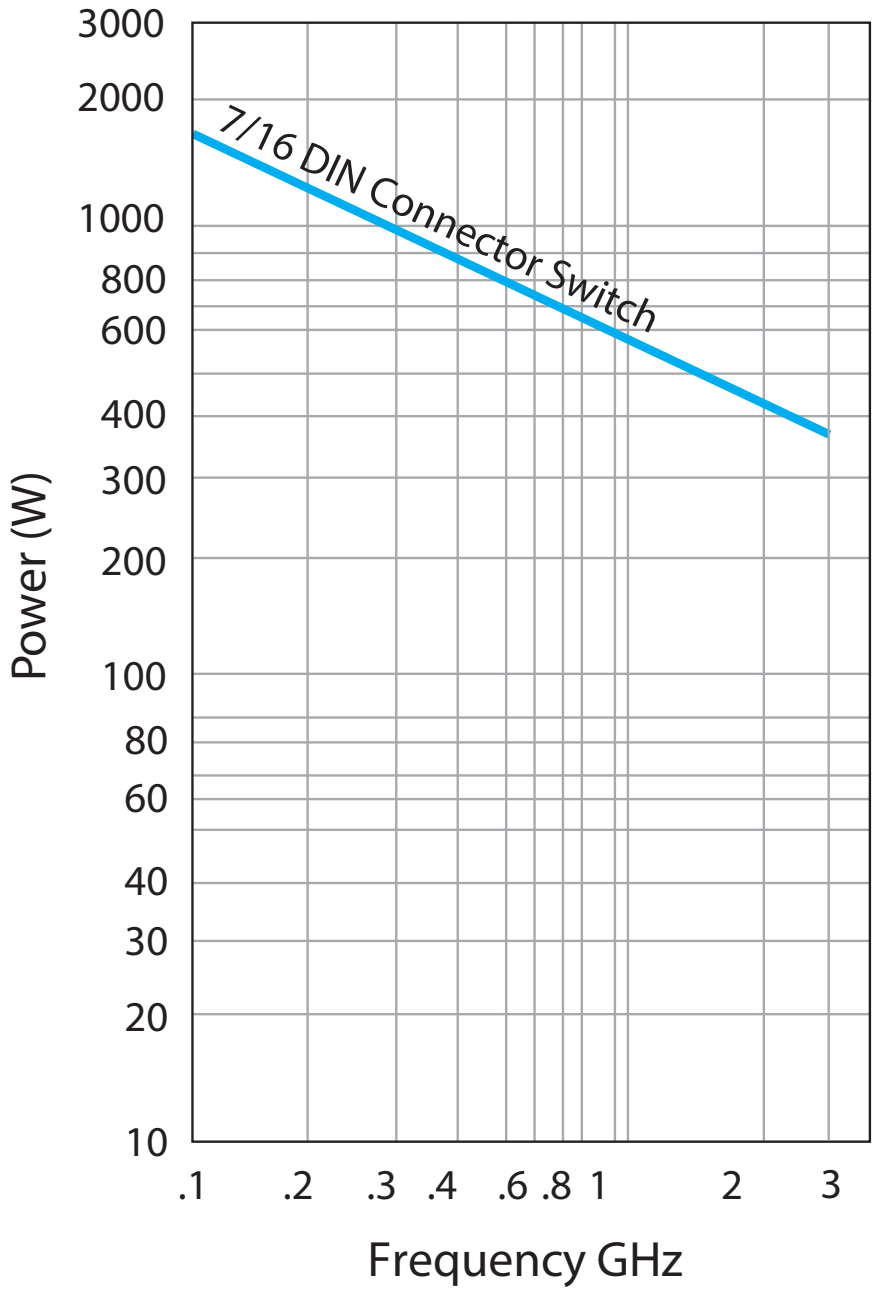

Estimates based on the following reference conditions:
- Ambient temperature of 40°C or less
- Sea level operation
- Load VSWR of 1.20:1 maximum
- No high-power (hot) switching

Please contact Teledyne Coax Switches for derating factors when applications do not meet the foregoing reference conditions.

SPECIFICATIONS ARE SUBJECT TO CHANGE WITHOUT NOTICE © 2013 TELEDYNE COAX SWITCHES

GLOSSARY

Actuator
An actuator is the electromechanical mechanism that transfers the RF contacts from one position to another upon DC command.

Arc Suppression Diode
A diode is connected in parallel with the coil. This diode limits the "reverse EMF spike" generated when the coil de-energizes to 0.7 volts. The diode cathode is connected to the positive side of the coil and the anode is connected to the negative side.

Date Code
All switches are marked with either a unique serial number or a date code. Date codes are in accordance with MIL-STD-1285 Paragraph 5.2.5 and consist of four digits. The first two digits define the year and the last two digits define the week of the year (YYWW). Thus, 1032 identifies switches that passed through final inspection during the 32nd week of 2010.

Indicator
Indicators tell the system which position the switch is in. Other names for indicators are telemetry contacts or tellback circuit. Indicators are usually a set of internally mounted DC contacts linked to the actuator. They can be wired to digital input lines, status lights, or interlocks. Unless otherwise specified, the maximum indicator contact rating is 30 Vdc, 50 mA, or 1.5 Watts into a resistive load.

Isolation
Isolation is the measure of the power level at the output connector of an unconnected RF channel as referenced to the power at the input connector. It is specified in dB below the input power level.

Multi-Throw Switch
A multi-throw switch is a switch with one input and three or more output ports. The CCP-18 can switch a microwave signal to any of 2,3,4,5 or 6 output from a single common input.

Switching Time
Switching time is the total interval beginning with the arrival of the leading edge of the command pulse at the switch DC input and ending with the completion of the switch transfer, including contact bounce. It consists of three parts: (1) inductive delay in the coil, (2) transfer time of the physical movement of the contacts, and (3) the bounce time of the RF contacts.

TTL Switch Driver Option
As a special option, switch drivers can be provided for both failsafe and latching switches, which are compatible with industry-standard low-power Schottky TTL circuits.

TD-Option
This option includes a decoder. The 3-bit parallel command is decoded to internally select the appropriate position. See the logic tables. The TD-Option increases the Vsw supply current demand by 50mA max at 28Vdc and +20°C.

Performance Parameters vs Frequency
Generally speaking, the RF performance of coaxial switches is frequency dependent. With increasing frequency, VSWR and insertion loss increase while isolation decreases. All data sheets specify these three parameters as "worst case" at the highest operating frequency. If the switch is to be used over a narrow frequency band, better performance can be achieved.

Actuator Current vs Temperature
The resistance of the actuator coil varies as a function of temperature. There is an inverse relationship between the operating temperature of the switch and the actuator drive current. For switches operating at 28 VDC, the approximate actuator drive current at temperature, T, can be calculated using the equation:

$$I_T = \frac{I_A}{[1 + .00385\ (T\text{-}20)]}$$

Where:

I_T = Actuator current at temperature, T

I_A = Room temperature actuator current – see data sheet

T = Temperature of interest in °C

Magnetic Sensitivity
An electro-mechanical switch can be sensitive to ferrous materials and external magnetic fields. Neighboring ferrous materials should be permitted no closer than 0.5 inches and adjacent external magnetic fields should be limited to a flux density of less than 5 Gauss.

NORMALLY OPEN CCP-18D PART NUMBER LIST

	Part No.		Part No.
1	CCP-18DX3C	**43**	CCP-18DX40
2	CCP-18DX3C-D	**44**	CCP-18DX40-D
3	CCP-18DX3C-DM	**45**	CCP-18DX40-DM
4	CCP-18DX3C-M	**46**	CCP-18DX40-M
5	CCP-18DX3C-MS	**47**	CCP-18DX40-MS
6	CCP-18DX3C-S	**48**	CCP-18DX40-S
7	CCP-18DX3C-T	**49**	CCP-18DX40-T
8	CCP-18DX3C-TD	**50**	CCP-18DX40-TD
9	CCP-18DX3C-TDM	**51**	CCP-18DX40-TDM
10	CCP-18DX3C-TDMS	**52**	CCP-18DX40-TDMS
11	CCP-18DX3C-TDS	**53**	CCP-18DX40-TDS
12	CCP-18DX3C-TM	**54**	CCP-18DX40-TM
13	CCP-18DX3C-TMS	**55**	CCP-18DX40-TMS
14	CCP-18DX3C-TS	**56**	CCP-18DX40-TS
15	CCP-18DX30		
16	CCP-18DX30-D		
17	CCP-18DX30-DM		
18	CCP-18DX30-M		
19	CCP-18DX30-MS		
20	CCP-18DX30-S		
21	CCP-18DX30-T		
22	CCP-18DX30-TD		
23	CCP-18DX30-TDM		
24	CCP-18DX30-TDMS		
25	CCP-18DX30-TDS		
26	CCP-18DX30-TM		
27	CCP-18DX30-TMS		
28	CCP-18DX30-TS		
29	CCP-18DX4C		
30	CCP-18DX4C-D		
31	CCP-18DX4C-DM		
32	CCP-18DX4C-M		
33	CCP-18DX4C-MS		
34	CCP-18DX4C-S		
35	CCP-18DX4C-T		
36	CCP-18DX4C-TD		
37	CCP-18DX4C-TDM		
38	CCP-18DX4C-TDMS		
39	CCP-18DX4C-TDS		
40	CCP-18DX4C-TM		
41	CCP-18DX4C-TMS		
42	CCP-18DX4C-TS		

* X = 1 (28Vdc), 2 (15Vdc), 3 (12Vdc) and 4 (24Vdc)

© 2013 TELEDYNE COAX SWITCHES