CC3220 SimpleLink™ Wi-Fi® and Internet of Things

Technical Reference Manual



Literature Number: SWRU465
February 2017

Contents

1 Architecture Overview 35
1.1 Introduction 36
1.1.1 Related Documentation 36
1.1.2 Register Bit Conventions 36
1.2 Architecture Overview 37
1.3 Functional Overview 38
1.3.1 Processor Core 38
1.3.2 Memory 39
1.3.3 Micro Direct Memory Access Controller (µDMA) 40
1.3.4 General Purpose Timer (GPT) 41
1.3.5 Watch Dog Timer (WDT) 41
1.3.6 Multi-Channel Audio Serial Port (McASP) 41
1.3.7 Serial Peripheral Interface (SPI) 41
1.3.8 Inter-Integrated Circuit Interface (I2C) 42
1.3.9 Universal Asynchronous Receiver/Transmitter (UART) 42
1.3.10 General Purpose Input / Output (GPIO) 43
1.3.11 Analog to Digital Converter (ADC) 43
1.3.12 SD Card Host 43
1.3.13 Parallel Camera Interface 43
1.3.14 Debug Interface 43
1.3.15 Hardware Cryptography Accelerator 44
1.3.16 Clock, Reset, and Power Management 44
1.3.17 SimpleLink Subsystem 45
1.3.18 I/O Pads and Pin Multiplexing 45
2 Cortex-M4 Processor 46
2.1 Overview 47
2.1.1 Block Diagram 47
2.1.2 System-Level Interface 48
2.1.3 Integrated Configurable Debug 48
2.1.4 Trace Port Interface Unit (TPIU) 49
2.1.5 Cortex-M4 System Component Details 49
2.2 Functional Description 49
2.2.1 Programming Model 49
2.2.2 Register Description 51
2.2.3 Memory Model 54
2.2.4 Exception Model 57
2.2.5 Fault Handling 63
2.2.6 Power Management 65
2.2.7 Instruction Set Summary 67
3 Cortex-M4 Peripherals 72
3.1 Overview 73
3.2 Functional Description 73
3.2.1 System Timer (SysTick) 73
3.2.2 Nested Vectored Interrupt Controller (NVIC) 74
3.2.3 System Control Block (SCB) 75

Copyright © 2017, Texas Instruments Incorporated

3.3 Register Map ... 76
3.3.1 Cortex Registers ... 79
4 Direct Memory Access (DMA) ... 113
4.1 Overview ... 114
4.2 Functional Description ... 114
4.2.1 Channel Assignment ... 115
4.2.2 Priority ... 116
4.2.3 Arbitration Size ... 116
4.2.4 Channel Configuration ... 116
4.2.5 Transfer Mode ... 117
4.2.6 Transfer Size and Increment ... 122
4.2.7 Peripheral Interface ... 123
4.2.8 Interrupts and Errors ... 123
4.3 Register Description ... 124
4.3.1 DMA Register Map ... 124
4.3.2 µDMA Channel Control Structure ... 125
4.3.3 DMA Registers ... 126
5 General-Purpose Input/Outputs (GPIOs) ... 131
5.1 Overview ... 132
5.2 Functional Description ... 132
5.2.1 Data Control ... 133
5.3 Interrupt Control ... 134
5.3.1 µDMA Trigger Source ... 134
5.4 Initialization and Configuration ... 134
5.5 GPIO Registers ... 136
5.5.1 GPIODATA Register (offset = 0h) [reset = 0h] ... 137
5.5.2 GPIODIR Register (offset = 400h) [reset = 0h] ... 138
5.5.3 GPIOIS Register (offset = 404h) [reset = 0h] ... 139
5.5.4 GPIOIBE Register (offset = 408h) [reset = 0h] ... 140
5.5.5 GPIOIEV Register (offset = 40Ch) [reset = 0h] ... 141
5.5.6 GPIOIM Register (offset = 410h) [reset = 0h] ... 142
5.5.7 GPIORIS Register (offset = 414h) [reset = 0h] ... 143
5.5.8 GPIOMIS Register (offset = 418h) [reset = 0h] ... 144
5.5.9 GPIOICR Register (offset = 41Ch) [reset = 0h] ... 145
5.5.10 GPIO_TRIG_EN Register ... 146
6 Universal Asynchronous Receivers/Transmitters (UARTs) ... 148
6.1 Overview ... 149
6.1.1 Block Diagram ... 150
6.2 Functional Description ... 150
6.2.1 Transmit/Receive Logic ... 150
6.2.2 Baud-Rate Generation ... 151
6.2.3 Data Transmission ... 151
6.2.4 Initialization and Configuration ... 154
6.3 UART Registers ... 156
6.3.1 UARTDR Register (Offset = 0h) [reset = 0h] ... 157
6.3.2 UARTRSR_UARTECR Register (Offset = 4h) [reset = 0h] ... 158
6.3.3 UARTFR Register (Offset = 18h) [reset = 90h] ... 160
6.3.4 UARTIBRD Register (Offset = 24h) [reset = 0h] ... 162
6.3.5 UARTFBRD Register (Offset = 28h) [reset = 0h] ... 163
6.3.6 UARTLCRH Register (Offset = 2Ch) [reset = 0h] ... 164
6.3.7 UARTCTL Register (Offset = 30h) [reset = 300h] ... 166
6.3.8 UARTIFLS Register (Offset = 34h) [reset = 12h] ... 168
6.3.9 UARTIM Register (Offset = 38h) [reset = 0h] ... 169

Copyright © 2017, Texas Instruments Incorporated

6.3.10 UARTRIS Register (Offset = 3Ch) [reset = 0h] ... 171
6.3.11 UARTMIS Register (Offset = 40h) [reset = 0h] ... 173
6.3.12 UARTICR Register (Offset = 44h) [reset = 0h] ... 175
6.3.13 UARTDMACTL Register (Offset = 48h) [reset = 0h] ... 177
7 Inter-Integrated Circuit (I2C) Interface ... 178
7.1 Overview ... 179
7.1.1 Block Diagram ... 180
7.1.2 Signal Description ... 180
7.2 Functional Description ... 181
7.2.1 I2C Bus Functional Overview ... 181
7.2.2 Supported Speed Modes ... 185
7.2.3 Interrupts ... 186
7.2.4 Loopback Operation ... 186
7.2.5 FIFO and µDMA Operation ... 186
7.2.6 Command Sequence Flow Charts ... 188
7.2.7 Initialization and Configuration ... 196
7.3 I2C Registers ... 197
7.3.1 I2CMSA Register (Offset = 0h) [reset = 0h] ... 198
7.3.2 I2CMCS Register (Offset = 4h) [reset = 20h] ... 199
7.3.3 I2CMDR Register (Offset = 8h) [reset = 0h] ... 204
7.3.4 I2CMTPR Register (Offset = Ch) [reset = 1h] ... 205
7.3.5 I2CMIMR Register (Offset = 10h) [reset = 0h] ... 206
7.3.6 I2CMRIS Register (Offset = 14h) [reset = 0h] ... 208
7.3.7 I2CMMIS Register (Offset = 18h) [reset = 0h] ... 210
7.3.8 I2CMICR Register (Offset = 1Ch) [reset = 0h] ... 212
7.3.9 I2CMCR Register (Offset = 20h) [reset = 0h] ... 214
7.3.10 I2CMCLKOCNT Register (Offset = 24h) [reset = 0h] ... 215
7.3.11 I2CMBMON Register (Offset = 2Ch) [reset = 3h] ... 216
7.3.12 I2CMBLEN Register (Offset = 30h) [reset = 0h] ... 217
7.3.13 I2CMBCNT Register (Offset = 34h) [reset = 0h] ... 218
7.3.14 I2CSOAR Register (Offset = 800h) [reset = 0h] ... 219
7.3.15 I2CSCSR Register (Offset = 804h) [reset = 0h] ... 220
7.3.16 I2CSDR Register (Offset = 808h) [reset = 0h] ... 222
7.3.17 I2CSIMR Register (Offset = 80Ch) [reset = 0h] ... 223
7.3.18 I2CSRIS Register (Offset = 810h) [reset = 0h] ... 225
7.3.19 I2CSMIS Register (Offset = 814h) [reset = 0h] ... 227
7.3.20 I2CSICR Register (Offset = 818h) [reset = 0h] ... 229
7.3.21 I2CSOAR2 Register (Offset = 81Ch) [reset = 0h] ... 231
7.3.22 I2CSACKCTL Register (Offset = 820h) [reset = 0h] ... 232
7.3.23 I2CFIFODATA Register (Offset = F00h) [reset = 0h] ... 233
7.3.24 I2CFIFOCTL Register (Offset = F04h) [reset = 00040004h] ... 234
7.3.25 I2CFIFOSTATUS Register (Offset = F08h) [reset = 00010005h] ... 236
7.3.26 I2CPP Register (Offset = FC0h) [reset = 1h] ... 237
7.3.27 I2CPC Register (Offset = FC4h) [reset = 1h] ... 238
8 SPI (Serial Peripheral Interface) ... 239
8.1 Overview ... 240
8.1.1 Features ... 241
8.2 Functional Description ... 241
8.2.1 SPI interface ... 241
8.2.2 SPI Transmission ... 241
8.2.3 Master Mode ... 245
8.2.4 Slave Mode ... 253
8.2.5 Interrupts ... 255

Copyright © 2017, Texas Instruments Incorporated

8.2.6 DMA Requests 255
8.2.7 Reset 256
8.3 Initialization and Configuration 256
8.3.1 Basic Initialization 256
8.3.2 Master Mode Operation Without Interrupt (Polling) 256
8.3.3 Slave Mode Operation With Interrupt 257
8.3.4 Generic Interrupt Handler Implementation 257
8.4 Access to Data Registers 257
8.5 Module Initialization 258
8.5.1 Common Transfer Sequence 258
8.5.2 End of Transfer Sequences 259
8.5.3 FIFO Mode 260
8.6 SPI Registers 265
8.6.1 SPI_SYSCONFIG Register (offset = 10h) [reset = 0h] 266
8.6.2 SPI_SYSSTATUS Register (offset = 114h) [reset = 0h] 267
8.6.3 SPI_IRQSTATUS Register (offset = 118h) [reset = 0h] 268
8.6.4 SPI_IRQENABLE Register (offset = 11Ch) [reset = 0h] 270
8.6.5 SPI_MODULCTRL Register (offset = 128h) [reset = 4h] 271
8.6.6 SPI_CHCONF Register (offset = 12Ch) [reset = 60000h] 272
8.6.7 SPI_CHSTAT Register (offset = 130h) [reset = 0h] 275
8.6.8 SPI_CHCTRL Register (offset = 134h) [reset = 0h] 276
8.6.9 SPI_TX Register (offset = 138h) [reset = 0h] 277
8.6.10 SPI_RX Register (offset = 13Ch) [reset = 0h] 278
8.6.11 SPI_XFERLEVEL Register (offset = 17Ch) [reset = 0h] 279
9 General-Purpose Timers 280
9.1 Overview 281
9.2 Block Diagram 281
9.3 Functional Description 282
9.3.1 GPTM Reset Conditions 282
9.3.2 Timer Modes 283
9.3.3 DMA Operation 289
9.3.4 Accessing Concatenated 16/32-Bit GPTM Register Values 289
9.4 Initialization and Configuration 289
9.4.1 One-Shot and Periodic Timer Mode 290
9.4.2 Input Edge-Count Mode 290
9.4.3 Input Edge-Time Mode 291
9.4.4 PWM Mode 291
9.5 Timer Registers 292
9.5.1 GPTMCFG Register (offset = 0h) [reset = 0h] 293
9.5.2 GPTMTAMR Register (offset = 4h) [reset = 0h] 294
9.5.3 GPTMTBMR Register (offset = 8h) [reset = 0h] 296
9.5.4 GPTMCTL Register (offset = Ch) [reset = 0h] 298
9.5.5 GPTMIMR Register (offset = 18h) [reset = 0h] 300
9.5.6 GPTMRIS Register (offset = 1Ch) [reset = 0h] 302
9.5.7 GPTMMIS Register (offset = 20h) [reset = 0h] 304
9.5.8 GPTMICR Register (offset = 24h) [reset = 0h] 306
9.5.9 GPTMTAILR Register (offset = 28h) [reset = FFFFFFFFh] 308
9.5.10 GPTMTBILR Register (offset = 2Ch) [reset = FFFFh] 309
9.5.11 GPTMTAMATCHR Register (offset = 30h) [reset = FFFFFFFFh] 310
9.5.12 GPTMTBMATCHR Register (offset = 34h) [reset = FFFFh] 311
9.5.13 GPTMTAPR Register (offset = 38h) [reset = 0h] 312
9.5.14 GPTMTBPR Register (offset = 3Ch) [reset = 0h] 313
9.5.15 GPTMTAPMR Register (offset = 40h) [reset = 0h] 314

Copyright © 2017, Texas Instruments Incorporated

9.5.16 GPTMTBPMR Register (offset = 44h) [reset = 0h] ... 315
9.5.17 GPTMTAR Register (offset = 48h) [reset = FFFFFFFFh] ... 316
9.5.18 GPTMTBR Register (offset = 4Ch) [reset = FFFFh] ... 317
9.5.19 GPTMTAV Register (offset = 50h) [reset = FFFFFFFFh] ... 318
9.5.20 GPTMTBV Register (offset = 54h) [reset = FFFFh] ... 319
9.5.21 GPTMDMAEV Register (offset = 6Ch) [reset = 0h] ... 320

10 Watchdog Timer ... 322
10.1 Overview ... 323
10.1.1 Block Diagram ... 323
10.2 Functional Description ... 324
10.2.1 Initialization and Configuration ... 324
10.3 WATCHDOG Registers ... 325
10.3.1 WDTLOAD Register (offset = 0h) [reset = FFFFFFFFh] ... 326
10.3.2 WDTVALUE Register (offset = 4h) [reset = FFFFFFFFh] ... 327
10.3.3 WDTCTL Register (offset = 8h) [reset = 80000000h] ... 328
10.3.4 WDTICR Register (offset = Ch) [reset = 0h] ... 329
10.3.5 WDTRIS Register (offset = 10h) [reset = 0h] ... 330
10.3.6 WDTTEST Register (offset = 418h) [reset = 0h] ... 331
10.3.7 WDTLOCK Register (offset = C00h) [reset = 0h] ... 332
10.4 MCU Watch Dog Controller Usage Caveats ... 333
10.4.1 System WatchDog ... 333
10.4.2 System WatchDog Recovery Sequence ... 335

11 SD Host Controller Interface ... 336
11.1 Overview ... 337
11.2 SD Host Features ... 337
11.3 1-Bit SD Interface ... 338
11.3.1 Clock and Reset Management ... 339
11.4 Initialization and Configuration Using Peripheral APIs ... 339
11.4.1 Basic Initialization and Configuration ... 339
11.4.2 Sending Command ... 340
11.4.3 Card Detection and Initialization ... 341
11.4.4 Block Read ... 343
11.4.5 Block Write ... 344
11.5 Performance and Testing ... 344
11.6 Peripheral Library APIs ... 345
11.7 SD-HOST Registers ... 349
11.7.1 MMCHS_CSRE Register (Offset = 124h) [reset = 0h] ... 350
11.7.2 MMCHS_CON Register (Offset = 12Ch) [reset = 0h] ... 351
11.7.3 MMCHS_BLK Register (Offset = 204h) [reset = 0h] ... 353
11.7.4 MMCHS_ARG Register (Offset = 208h) [reset = 0h] ... 354
11.7.5 MMCHS_CMD Register (Offset = 20Ch) [reset = 0h] ... 355
11.7.6 MMCHS_RSP10 Register (Offset = 210h) [reset = 0h] ... 357
11.7.7 MMCHS_RSP32 Register (Offset = 214h) [reset = 0h] ... 358
11.7.8 MMCHS_RSP54 Register (Offset = 218h) [reset = 0h] ... 359
11.7.9 MMCHS_RSP76 Register (Offset = 21Ch) [reset = 0h] ... 360
11.7.10 MMCHS_DATA Register (Offset = 220h) [reset = 0h] ... 361
11.7.11 MMCHS_PSTATE Register (Offset = 224h) [reset = 0h] ... 362
11.7.12 MMCHS_HCTL Register (Offset = 228h) [reset = 0h] ... 364
11.7.13 MMCHS_SYSCTL Register (Offset = 22Ch) [reset = 0h] ... 365
11.7.14 MMCHS_STAT Register (Offset = 230h) [reset = 0h] ... 367
11.7.15 MMCHS_IE Register (Offset = 234h) [reset = 0h] ... 371
11.7.16 MMCHS_ISE Register (Offset = 238h) [reset = 0h] ... 373

12 Inter-Integrated Sound (I2S) Multi-Channel Audio Serial Port ... 375

Copyright © 2017, Texas Instruments Incorporated

12.1 Overview 376
12.1.1 I2S Format 376
12.2 Functional Description 377
12.3 Programming Model 377
12.3.1 Clock and Reset Management 377
12.3.2 I2S Data Port Interface 378
12.3.3 Initialization and Configuration 378
12.4 Peripheral Library APIs for I2S Configuration 380
12.4.1 Basic APIs for Enabling and Configuring the Interface 380
12.4.2 APIs for Data Access if DMA is Not Used 382
12.4.3 APIs for Setting Up, Handling Interrupts, or Getting Status from I2S Peripheral 383
12.4.4 APIs to Control FIFO Structures Associated with I2S Peripheral 386
12.5 I2S Registers 389
12.5.1 AFIFOREV Register (Offset = 0h) [reset = 0h] 391
12.5.2 WFIFOCTL Register (Offset = 10h) [reset = 1004h] 392
12.5.3 PDIR Register (Offset = 14h) [reset = 0h] 393
12.5.4 RFIFOCTL Register (Offset = 18h) [reset = 1004h] 395
12.5.5 RFIFOSTS Register (Offset = 1Ch) [reset = 0h] 396
12.5.6 GBLCTL Register (Offset = 44h) [reset = 0h] 397
12.5.7 RGBLCTL Register (Offset = 60h) [reset = 0h] 399
12.5.8 RMASK Register (Offset = 64h) [reset = 0h] 401
12.5.9 RFMT Register (Offset = 68h) [reset = 0h] 402
12.5.10 AFSRCTL Register (Offset = 6Ch) [reset = 0h] 404
12.5.11 RTDM Register (Offset = 78h) [reset = 0h] 405
12.5.12 RINTCTL Register (Offset = 7Ch) [reset = 0h] 406
12.5.13 RSTAT Register (Offset = 80h) [reset = 0h] 408
12.5.14 RSLOT Register (Offset = 84h) [reset = 0h] 410
12.5.15 REVTCTL Register (Offset = 8Ch) [reset = 0h] 411
12.5.16 XGBLCTL Register (Offset = A0h) [reset = 0h] 412
12.5.17 XMASK Register (Offset = A4h) [reset = 0h] 414
12.5.18 XFMT Register (Offset = A8h) [reset = 0h] 415
12.5.19 AFSXCTL Register (Offset = ACh) [reset = 0h] 417
12.5.20 ACLKXCTL Register (Offset = B0h) [reset = 60h] 418
12.5.21 AHCLKXCTL Register (Offset = B4h) [reset = 8000h] 419
12.5.22 XTDM Register (Offset = B8h) [reset = 0h] 420
12.5.23 XINTCTL Register (Offset = BCh) [reset = 0h] 421
12.5.24 XSTAT Register (Offset = C0h) [reset = 0h] 423
12.5.25 XSLOT Register (Offset = C4h) [reset = 17Fh] 425
12.5.26 XEVTCTL Register (Offset = CCh) [reset = 0h] 426
12.5.27 SRCTLn Register (Offset = 180h) [reset = 0h] 427
12.5.28 XBUFn Register (Offset = 200h) [reset = 0h] 429
12.5.29 RBUFn Register (Offset = 280h) [reset = 0h] 430

13 Analog-to-Digital Converter [ADC] 431

13.1 Overview 432
13.2 Key Features 432
13.3 ADC Register Mapping 433
13.4 ADC_MODULE Registers 434
13.4.1 ADC Register Description 434
13.5 Initialization and Configuration 456
13.6 Peripheral Library APIs for ADC Operation 456
13.6.1 Overview 456
13.6.2 Configuring the ADC Channels 456
13.6.3 Basic APIs for Enabling and Configuring the Interface 457

Copyright © 2017, Texas Instruments Incorporated

13.6.4 APIs for Data Transfer [Direct Access to FIFO and DMA Setup] 458
13.6.5 APIs for Interrupt Usage 459
13.6.6 APIs for Setting Up ADC Timer for Time Stamping the Samples 461
14 Parallel Camera Interface Module 464
14.1 Overview 465
14.2 Image Sensor Interface 465
14.3 Functional Description 466
14.3.1 Modes of Operation 466
14.3.2 FIFO Buffer 469
14.3.3 Reset 469
14.3.4 Clock Generation 469
14.3.5 Interrupt Generation 470
14.3.6 DMA Interface 470
14.4 Programming Model 471
14.4.1 Camera Core Reset 471
14.4.2 Enable the Picture Acquisition 471
14.4.3 Disable the Picture Acquisition 472
14.5 Interrupt Handling 472
14.5.1 FIFO_OF_IRQ (FIFO overflow) 472
14.5.2 FIFO_UF_IRQ (FIFO underflow) 472
14.6 Camera Registers 473
14.6.1 CC_SYSCONFIG Register (Offset = 10h) [reset = 0h] 474
14.6.2 CC_SYSSTATUS Register (Offset = 14h) [reset = X] 475
14.6.3 CC_IRQSTATUS Register (Offset = 18h) [reset = 0h] 476
14.6.4 CC_IRQENABLE Register (Offset = 1Ch) [reset = 0h] 478
14.6.5 CC_CTRL Register (Offset = 40h) [reset = 1001h] 480
14.6.6 CC_CTRL_DMA Register (Offset = 44h) [reset = 207h] 482
14.6.7 CC_CTRL_XCLK Register (Offset = 48h) [reset = 0h] 483
14.6.8 CC_FIFODATA Register (Offset = 4Ch) [reset = X] 484
14.7 Peripheral Library APIs 485
14.8 Developer's Guide 488
14.8.1 Using Peripheral Driver APIs for Capturing an Image 488
14.8.2 Using Peripheral Driver APIs for Communicating with Image Sensors 490
15 Power, Reset and Clock Management 492
15.1 Overview 493
15.1.1 VBAT Wide-Voltage Connection 493
15.1.2 Pre-Regulated 1.85 V 493
15.1.3 Supply Brownout and Blackout 495
15.1.4 Application Processor Power Modes 495
15.2 Power Management Control Architecture 497
15.2.1 Global Power-Reset-Clock Manager (GPRCM) 499
15.2.2 Application Reset-Clock Manager (ARCM) 500
15.3 PRCM APIs 500
15.3.1 MCU Initialization 500
15.3.2 Reset Control 500
15.3.3 Peripheral Reset 500
15.3.4 Reset Cause 500
15.3.5 Clock Control 501
15.3.6 Low Power Modes 501
15.3.7 Sleep (SLEEP) 502
15.3.8 Deep Sleep (DEEPSLEEP) 502
15.3.9 Low-Power Deep Sleep (LPDS) 502
15.3.10 Hibernate (HIB) 504

Copyright © 2017, Texas Instruments Incorporated

15.3.11 Slow Clock Counter 506
15.4 Peripheral Macros 506
15.5 Power Management Framework 507
15.6 PRCM Registers 508
15.6.1 CAMCLKCFG Register (offset = 0h) [reset = 0h] 510
15.6.2 CAMCLKEN Register (offset = 4h) [reset = 0h] 511
15.6.3 CAMSWRST Register (offset = 8h) [reset = 0h] 512
15.6.4 MCASPCLKEN Register (offset = 14h) [reset = 0h] 513
15.6.5 MCASPSWRST Register (offset = 18h) [reset = 0h] 514
15.6.6 SDIOMCLKCFG Register (offset = 20h) [reset = 0h] 515
15.6.7 SDIOMCLKEN Register (offset = 24h) [reset = 0h] 516
15.6.8 SDIOMSWRST Register (offset = 28h) [reset = 0h] 517
15.6.9 APSPICLKCFG Register (offset = 2Ch) [reset = 0h] 518
15.6.10 APSPICLKEN Register (offset = 30h) [reset = 0h] 519
15.6.11 APSPISWRST Register (offset = 34h) [reset = 0h] 520
15.6.12 DMACLKEN Register (offset = 48h) [reset = 0h] 521
15.6.13 DMASWRST Register (offset = 4Ch) [reset = 0h] 522
15.6.14 GPIO0CLKEN Register (offset = 50h) [reset = 0h] 523
15.6.15 GPIO0SWRST Register (offset = 54h) [reset = 0h] 524
15.6.16 GPIO1CLKEN Register (offset = 58h) [reset = 0h] 525
15.6.17 GPIO1SWRST Register (offset = 5Ch) [reset = 0h] 526
15.6.18 GPIO2CLKEN Register (offset = 60h) [reset = 0h] 527
15.6.19 GPIO2SWRST Register (offset = 64h) [reset = 0h] 528
15.6.20 GPIO3CLKEN Register (offset = 68h) [reset = 0h] 529
15.6.21 GPIO3SWRST Register (offset = 6Ch) [reset = 0h] 530
15.6.22 GPIO4CLKEN Register (offset = 70h) [reset = 0h] 531
15.6.23 GPIO4SWRST Register (offset = 74h) [reset = 0h] 532
15.6.24 WDTCLKEN Register (offset = 78h) [reset = 0h] 533
15.6.25 WDTSWRST Register (offset = 7Ch) [reset = 0h] 534
15.6.26 UART0CLKEN Register (offset = 80h) [reset = 0h] 535
15.6.27 UART0SWRST Register (offset = 84h) [reset = 0h] 536
15.6.28 UART1CLKEN Register (offset = 88h) [reset = 0h] 537
15.6.29 UART1SWRST Register (offset = 8Ch) [reset = 0h] 538
15.6.30 GPT0CLKCFG Register (offset = 90h) [reset = 0h] 539
15.6.31 GPT0SWRST Register (offset = 94h) [reset = 0h] 540
15.6.32 GPT1CLKEN Register (offset = 98h) [reset = 0h] 541
15.6.33 GPT1SWRST Register (offset = 9Ch) [reset = 0h] 542
15.6.34 GPT2CLKEN Register (offset = A0h) [reset = 0h] 543
15.6.35 GPT2SWRST Register (offset = A4h) [reset = 0h] 544
15.6.36 GPT3CLKEN Register (offset = A8h) [reset = 0h] 545
15.6.37 GPT3SWRST Register (offset = ACh) [reset = 0h] 546
15.6.38 MCASPCLKCFG0 Register (offset = B0h) [reset = A0000h] 547
15.6.39 MCASPCLKCFG1 Register (offset = B4h) [reset = 0h] 548
15.6.40 I2CLCKEN Register (offset = D8h) [reset = 0h] 549
15.6.41 I2CSWRST Register (offset = DCh) [reset = 0h] 550
15.6.42 LPDSREQ Register (offset = E4h) [reset = 0h] 551
15.6.43 TURBOREQ Register (offset = ECh) [reset = 0h] 552
15.6.44 DSLPWAKECFG Register (offset = 108h) [reset = 0h] 553
15.6.45 DSLPTIMRCFG Register (offset = 10Ch) [reset = 0h] 554
15.6.46 SLPWAKEEN Register (offset = 110h) [reset = 0h] 555
15.6.47 SLPTMRCFG Register (offset = 114h) [reset = 0h] 556
15.6.48 WAKENWP Register (offset = 118h) [reset = 0h] 557
15.6.49 RCM_IS Register (offset = 120h) [reset = 0h] 558

Copyright © 2017, Texas Instruments Incorporated

15.6.50 RCM_IEN Register (offset = 124h) [reset = 0h] 559
16 I/O Pads and Pin Multiplexing 560
16.1 Overview 561
16.2 I/O Pad Electrical Specifications 562
16.3 Analog-Digital Pin Multiplexing 563
16.4 Special Ana/DIG Pins 564
16.4.1 Pin 45 and 52 564
16.4.2 Pin 29 and 30 566
16.4.3 Pin 57, 58, 59, 60 566
16.5 Analog Mux Control Registers 566
16.6 Pins Available for Applications 568
16.7 Functional Pin Mux Configurations 570
16.8 Pin Mapping Recommendations 584
16.8.1 Pad Configuration Registers for Application Pins 586
16.8.2 PAD Behavior During Reset and Hibernate 587
16.8.3 Control Architecture 588
16.8.4 CC32xx Pin-mux Examples 588
16.8.5 Wake on Pad 591
16.8.6 Sense on Power 591
17 Advance Encryption Standard Accelerator (AES) 593
17.1 AES Overview 594
17.2 AES Functional Description 594
17.2.1 AES Block Diagram 594
17.2.2 AES Algorithm 597
17.2.3 AES Operating Modes 598
17.2.4 Hardware Requests 608
17.3 AES Module Programming Guide 609
17.3.1 AES Low - Level Programming Models 609
17.4 AES Registers 614
17.4.1 AES_KEY2_6 Register (Offset = 0h) [reset = 0h] 615
17.4.2 AES_KEY2_7 Register (Offset = 4h) [reset = 0h] 615
17.4.3 AES_KEY2_4 Register (Offset = 8h) [reset = 0h] 616
17.4.4 AES_KEY2_5 Register (Offset = Ch) [reset = 0h] 616
17.4.5 AES_KEY2_2 Register (Offset = 10h) [reset = 0h] 617
17.4.6 AES_KEY2_3 Register (Offset = 14h) [reset = 0h] 617
17.4.7 AES_KEY2_0 Register (Offset = 18h) [reset = 0h] 618
17.4.8 AES_KEY2_1 Register (Offset = 1Ch) [reset = 0h] 618
17.4.9 AES_KEY1_6 Register (Offset = 20h) [reset = 0h] 619
17.4.10 AES_KEY1_7 Register (Offset = 24h) [reset = 0h] 619
17.4.11 AES_KEY1_4 Register (Offset = 28h) [reset = 0h] 620
17.4.12 AES_KEY1_5 Register (Offset = 2Ch) [reset = 0h] 620
17.4.13 AES_KEY1_2 Register (Offset = 30h) [reset = 0h] 621
17.4.14 AES_KEY1_3 Register (Offset = 34h) [reset = 0h] 621
17.4.15 AES_KEY1_0 Register (Offset = 38h) [reset = 0h] 622
17.4.16 AES_KEY1_1 Register (Offset = 3Ch) [reset = 0h] 622
17.4.17 AES_IV_IN_0 Register (Offset = 40h) [reset = 0h] 623
17.4.18 AES_IV_IN_1 Register (Offset = 44h) [reset = 0h] 623
17.4.19 AES_IV_IN_2 Register (Offset = 48h) [reset = 0h] 624
17.4.20 AES_IV_IN_3 Register (Offset = 4Ch) [reset = 0h] 624
17.4.21 AES_CTRL Register (Offset = 50h) [reset = X] 625
17.4.22 AES_C_LENGTH_0 Register (Offset = 54h) [reset = 0h] 628
17.4.23 AES_C_LENGTH_1 Register (Offset = 58h) [reset = X] 629
17.4.24 AES_AUTH_LENGTH Register (Offset = 5Ch) [reset = 0h] 630

Copyright © 2017, Texas Instruments Incorporated

17.4.25 AES_DATA_IN_0 Register (Offset = 60h) [reset = 0h] 631
17.4.26 AES_DATA_IN_1 Register (Offset = 64h) [reset = 0h] 631
17.4.27 AES_DATA_IN_2 Register (Offset = 68h) [reset = 0h] 632
17.4.28 AES_DATA_IN_3 Register (Offset = 6Ch) [reset = 0h] 632
17.4.29 AES_TAG_OUT_0 Register (Offset = 70h) [reset = 0h] 633
17.4.30 AES_TAG_OUT_1 Register (Offset = 74h) [reset = 0h] 633
17.4.31 AES_TAG_OUT_2 Register (Offset = 78h) [reset = 0h] 634
17.4.32 AES_TAG_OUT_3 Register (Offset = 7Ch) [reset = 0h] 634
17.4.33 AES_REVISION Register (Offset = 80h) [reset = X] 635
17.4.34 AES_SYSCONFIG Register (Offset = 84h) [reset = X] 637
17.4.35 AES_IRQSTATUS Register (Offset = 8Ch) [reset = X] 638
17.4.36 AES_IRQENABLE Register (Offset = 90h) [reset = X] 639
17.4.37 CRYPTOCLKEN Register (Offset = B8h) [reset = X] 640
17.4.38 DTHE_AES_IM Register (Offset = 820h) [reset = X] 641
17.4.39 DTHE_AES_RIS Register (Offset = 824h) [reset = X] 642
17.4.40 DTHE_AES_MIS Register (Offset = 828h) [reset = X] 643
17.4.41 DTHE_AES_IC Register (Offset = 82Ch) [reset = X] 644

18 Data Encryption Standard Accelerator (DES) 645

18.1 DES Functional Description 646
18.2 DES Block Diagram 646
18.2.1 µDMA Control 647
18.2.2 Interrupt Control 647
18.2.3 Register Interface 648
18.2.4 DES Enginer 648
18.3 DES-Supported Modes of Operation 648
18.3.1 ECB Feedback Mode 648
18.4 DES Module Programming Guide – Low-Level Programming Models 650
18.4.1 Surrounding Modules Global Initialization 650
18.4.2 Operational Modes Configuration 651
18.4.3 DES Events Servicing 653
18.5 DES Registers 655
18.5.1 DTHE_DES_IM Register (Offset = 830h) [reset = Dh] 656
18.5.2 DTHE_DES_RIS Register (Offset = 834h) [reset = 0h] 657
18.5.3 DTHE_DES_MIS Register (Offset = 838h) [reset = 0h] 658
18.5.4 DTHE_DES_IC Register (Offset = 83Ch) [reset = 0h] 659
18.5.5 DES_KEY3_L Register (Offset = 1000h) [reset = 0h] 660
18.5.6 DES_KEY3_H Register (Offset = 1004h) [reset = 0h] 661
18.5.7 DES_KEY2_L Register (Offset = 1008h) [reset = 0h] 662
18.5.8 DES_KEY2_H Register (Offset = 100Ch) [reset = 0h] 663
18.5.9 DES_KEY1_L Register (Offset = 1010h) [reset = 0h] 664
18.5.10 DES_KEY1_H Register (Offset = 1014h) [reset = 0h] 665
18.5.11 DES_IV_L Register (Offset = 1018h) [reset = 0h] 666
18.5.12 DES_IV_H Register (Offset = 101Ch) [reset = 0h] 667
18.5.13 DES_CTRL Register (Offset = 1020h) [reset = 80000000h] 668
18.5.14 DES_LENGTH Register (Offset = 1024h) [reset = 0h] 669
18.5.15 DES_DATA_L Register (Offset = 1028h) [reset = 0h] 670
18.5.16 DES_DATA_H Register (Offset = 102Ch) [reset = 0h] 671
18.5.17 DES_SYSCONFIG Register (Offset = 1034h) [reset = 0h] 672
18.5.18 DES_IRQSTATUS Register (Offset = 103Ch) [reset = 0h] 673
18.5.19 DES_IRQENABLE Register (Offset = 1040h) [reset = 0h] 674

19 SHA/MD5 Accelerator 675

19.1 SHA/MD5 Functional Description 676
19.1.1 SHA/MD5 Block Diagram 676

Copyright © 2017, Texas Instruments Incorporated

19.1.2 µDMA and Interrupt Requests 677
19.1.3 Operation Description 677
19.1.4 SHA/MD5 Programming Guide 683
19.2 SHA-MD5 Registers 687
19.2.1 SHAMD5_ODIGEST_A Register (Offset = 0h) [reset = 0h] 690
19.2.2 SHAMD5_ODIGEST_B Register (Offset = 4h) [reset = 0h] 691
19.2.3 SHAMD5_ODIGEST_C Register (Offset = 8h) [reset = 0h] 692
19.2.4 SHAMD5_ODIGEST_D Register (Offset = Ch) [reset = 0h] 693
19.2.5 SHAMD5_ODIGEST_E Register (Offset = 10h) [reset = 0h] 694
19.2.6 SHAMD5_ODIGEST_F Register (Offset = 14h) [reset = 0h] 695
19.2.7 SHAMD5_ODIGEST_G Register (Offset = 18h) [reset = 0h] 696
19.2.8 SHAMD5_ODIGEST_H Register (Offset = 1Ch) [reset = 0h] 697
19.2.9 SHAMD5_IDIGEST_A Register (Offset = 20h) [reset = 0h] 698
19.2.10 SHAMD5_IDIGEST_B Register (Offset = 24h) [reset = 0h] 699
19.2.11 SHAMD5_IDIGEST_C Register (Offset = 28h) [reset = 0h] 700
19.2.12 SHAMD5_IDIGEST_D Register (Offset = 2Ch) [reset = 0h] 701
19.2.13 SHAMD5_IDIGEST_E Register (Offset = 30h) [reset = 0h] 702
19.2.14 SHAMD5_IDIGEST_F Register (Offset = 34h) [reset = 0h] 703
19.2.15 SHAMD5_IDIGEST_G Register (Offset = 38h) [reset = 0h] 704
19.2.16 SHAMD5_IDIGEST_H Register (Offset = 3Ch) [reset = 0h] 705
19.2.17 SHAMD5_DIGEST_COUNT Register (Offset = 40h) [reset = 0h] 706
19.2.18 SHAMD5_MODE Register (Offset = 44h) [reset = X] 707
19.2.19 SHAMD5_LENGTH Register (Offset = 48h) [reset = 0h] 709
19.2.20 SHAMD5_DATA0_IN Register (Offset = 80h) [reset = 0h] 711
19.2.21 SHAMD5_DATA1_IN Register (Offset = 84h) [reset = 0h] 712
19.2.22 SHAMD5_DATA2_IN Register (Offset = 88h) [reset = 0h] 713
19.2.23 SHAMD5_DATA3_IN Register (Offset = 8Ch) [reset = 0h] 714
19.2.24 SHAMD5_DATA4_IN Register (Offset = 90h) [reset = 0h] 715
19.2.25 SHAMD5_DATA5_IN Register (Offset = 94h) [reset = 0h] 716
19.2.26 SHAMD5_DATA6_IN Register (Offset = 98h) [reset = 0h] 717
19.2.27 SHAMD5_DATA7_IN Register (Offset = 9Ch) [reset = 0h] 718
19.2.28 SHAMD5_DATA8_IN Register (Offset = A0h) [reset = 0h] 719
19.2.29 SHAMD5_DATA9_IN Register (Offset = A4h) [reset = 0h] 720
19.2.30 SHAMD5_DATA10_IN Register (Offset = A8h) [reset = 0h] 721
19.2.31 SHAMD5_DATA11_IN Register (Offset = ACh) [reset = 0h] 722
19.2.32 SHAMD5_DATA12_IN Register (Offset = B0h) [reset = 0h] 723
19.2.33 SHAMD5_DATA13_IN Register (Offset = B4h) [reset = 0h] 724
19.2.34 SHAMD5_DATA14_IN Register (Offset = B8h) [reset = 0h] 725
19.2.35 SHAMD5_DATA15_IN Register (Offset = BCh) [reset = 0h] 726
19.2.36 SHAMD5_SYSCONFIG Register (Offset = 110h) [reset = X] 727
19.2.37 SHAMD5_IRQSTATUS Register (Offset = 118h) [reset = X] 728
19.2.38 SHAMD5_IRQENABLE Register (Offset = 11Ch) [reset = X] 729
19.2.39 DTHE_SHA_IM Register (Offset = 810h) [reset = X] 730
19.2.40 DTHE_SHA_RIS Register (Offset = 814h) [reset = X] 731
19.2.41 DTHE_SHA_MIS Register (Offset = 818h) [reset = X] 732
19.2.42 DTHE_SHA_IC Register (Offset = 81Ch) [reset = X] 733
20 Cyclical Redundancy Check (CRC) 734
20.1 Functional Description 735
20.1.1 CRC Support 735
20.2 Initialization and Configuration 736
20.2.1 CRC Initialization and Configuration 736
20.3 CRC Registers 738
20.3.1 CRCCTRL Register (Offset = C00h) [reset = 0h] 739

Copyright © 2017, Texas Instruments Incorporated

20.3.2 CRCSEED Register (Offset = C10h) [reset = 0h] 741
20.3.3 CRCDIN Register (Offset = C14h) [reset = 0h] 742
20.3.4 CRCRSLTPP Register (Offset = C18h) [reset = 0h] 743

21 On Chip Parallel Flash 744

21.1 Flash Memory Configuration 745
21.2 Interrupts 745
21.3 Flash Memory Programming 745
21.4 32-Word Flash Memory Write Buffer 746
21.5 Flash Registers 747
21.5.1 FMA Register (Offset = 0h) [reset = 0h] 748
21.5.2 FMD Register (Offset = 4h) [reset = 0h] 749
21.5.3 FMC Register (Offset = 8h) [reset = 0h] 750
21.5.4 FCRIS Register (Offset = Ch) [reset = 0h] 752
21.5.5 FCIM Register (offset = 10h) [reset = 0h] 754
21.5.6 FCMISC Register (Offset = 14h) [reset = 0h] 755
21.5.7 FMC2 Register (Offset = 20h) [reset = 0h] 757
21.5.8 FWBVAL Register (Offset = 30h) [reset = 0h] 758
21.5.9 FWBn Register (Offset = 100h) [reset = 0h] 759
21.6 CC3220SF Boot Flow 760
21.7 Flash User Application and Memory Partition 760
21.8 Programming, Bootstrapping, and Updating the Flash User Application 761
21.9 Image Authentication and Integrity Check 762
21.10 Debugging Flash User Application Using JTAG 763

A Software Development Kit Examples 765

B CC3220 Miscellaneous Registers 766

B.1 Miscellaneous Register Summary 766
B.1.1 DMA_IMR Register (offset = 8Ch) [reset = FF0Fh] 767
B.1.2 DMA_IMS Register (offset = 90h) [reset = 0h] 769
B.1.3 DMA_IMC Register (offset = 94h) [reset = 0h] 771
B.1.4 DMA_ICR Register (offset = 9Ch) [reset = 0h] 773
B.1.5 DMA_MIS Register (offset = A0h) [reset = 0h] 775
B.1.6 DMA_RIS Register (offset = A4h) [reset = 0h] 777
B.1.7 GPTTRIGSEL Register (offset = B0h) [reset = 0h] 779

Copyright © 2017, Texas Instruments Incorporated

List of Figures

1-1. CC32xx MCU and WIFI System-on-Chip 37
2-1. Application CPU Block Diagram 48
2-2. TPIU Block Diagram 49
2-3. Cortex-M4 Register Set 51
2-4. Data Storage 56
2-5. Vector Table 61
2-6. Exception Stack Frame 63
2-7. Power Management Architecture in CC32xx SoC 66
3-1. ACTLR Register 80
3-2. STCTRL Register 82
3-3. STRELOAD Register 83
3-4. STCURRENT Register 84
3-5. EN_0 to EN_6 Register 85
3-6. DIS_0 to DIS_6 Register 86
3-7. PEND_0 to PEND_6 Register 87
3-8. UNPEND_0 to UNPEND_6 Register 88
3-9. ACTIVE_0 to ACTIVE_6 Register 89
3-10. PRI_0 to PRI_49 Register 90
3-11. CPUID Register 91
3-12. INTCTRL Register 92
3-13. VTABLE Register 94
3-14. APINT Register 95
3-15. SYSCTRL Register 97
3-16. CFGCTRL Register 98
3-17. SYSPRI1 Register 100
3-18. SYSPRI2 Register 101
3-19. SYSPRI3 Register 102
3-20. SYSHNDCTRL Register 103
3-21. FAULTSTAT Register 106
3-22. HFAULTSTAT Register 110
3-23. FAULTDDR Register 111
3-24. SWTRIG Register 112
4-1. DMA Channel Assignment 115
4-2. Ping-Pong Mode 119
4-3. Memory Scatter-Gather Mode 121
4-4. Peripheral Scatter-Gather Mode 122
4-5. DMA_SRCENDP Register 127
4-6. DMA_DSTENDP Register 128
4-7. DMA_CHCTL Register 129
5-1. Digital I/O Pads 132
5-2. GPIODATA Write Example 133
5-3. GPIODATA Read Example 133
5-4. GPIODATA Register 137
5-5. GPIODIR Register 138
5-6. GPIOIS Register 139
5-7. GPIOIBE Register 140
5-8. GPIOIEV Register 141

Copyright © 2017, Texas Instruments Incorporated

5-9. GPIOIM Register 142
5-10. GPIORIS Register 143
5-11. GPIOMIS Register 144
5-12. GPIOICR Register 145
6-1. UART Module Block Diagram 150
6-2. UART Character Frame 151
6-3. UARTDR Register 157
6-4. UARTRSR_UARTECR Register 158
6-5. UARTFR Register 160
6-6. UARTIBRD Register 162
6-7. UARTFBRD Register 163
6-8. UARTLCRH Register 164
6-9. UARTCTL Register 166
6-10. UARTIFLS Register 168
6-11. UARTIM Register 169
6-12. UARTRIS Register 171
6-13. UARTMIS Register 173
6-14. UARTICR Register 175
6-15. UARTDMACTL Register 177
7-1. I2C Block Diagram 180
7-2. I2C Bus Configuration 181
7-3. START and STOP Conditions 182
7-4. Complete Data Transfer with a 7-Bit Address 182
7-5. R/S Bit in First Byte 182
7-6. Data Validity During Bit Transfer on the I2C Bus 183
7-7. Master Single TRANSMIT 189
7-8. Master Single RECEIVE 190
7-9. Master TRANSMIT of Multiple Data Bytes 191
7-10. Master RECEIVE of Multiple Data Bytes 192
7-11. Master RECEIVE with Repeated START after Master TRANSMIT 193
7-12. Master TRANSMIT with Repeated START after Master RECEIVE 194
7-13. Slave Command Sequence 195
7-14. I2CMSA Register 198
7-15. I2CMCS Register 199
7-16. I2CMDR Register 204
7-17. I2CMTPR Register 205
7-18. I2CMIMR Register 206
7-19. I2CMRIS Register 208
7-20. I2CMMIS Register 210
7-21. I2CMICR Register 212
7-22. I2CMCR Register 214
7-23. I2CMCLKOCNT Register 215
7-24. I2CMBMON Register 216
7-25. I2CMBLEN Register 217
7-26. I2CMBCNT Register 218
7-27. I2CSOAR Register 219
7-28. I2CSCSR Register 220
7-29. I2CSDR Register 222
7-30. I2CSIMR Register 223

Copyright © 2017, Texas Instruments Incorporated

7-31. I2CSRIS Register 225
7-32. I2CSMIS Register 227
7-33. I2CSICR Register 229
7-34. I2CSOAR2 Register 231
7-35. I2CSACKCTL Register 232
7-36. I2CFIFODATA Register 233
7-37. I2CFIFOCTL Register 234
7-38. I2CFIFOSTATUS Register 236
7-39. I2CPP Register 237
7-40. I2CPC Register 238
8-1. SPI Block Diagram 240
8-2. SPI Full Duplex Transmission (Example) 242
8-3. Full Duplex Single Transfer Format with PHA = 0 244
8-4. Full Duplex Single Transfer Format with PHA = 1 245
8-5. Contiguous Transfers with SPIEN Kept Active (2 Data Pins Interface Mode) 247
8-6. Transmit/Receive Mode With no FIFO Used 249
8-7. Transmit/Receive Mode With Only Receive FIFO Enabled 249
8-8. Transmit/Receive Mode With Only Transmit FIFO Used 250
8-9. Transmit/Receive Mode With Both FIFO Directions Used 250
8-10. Buffer Almost Full Level (AFL) 251
8-11. Buffer Almost Empty Level (AEL) 251
8-12. 3-Pin Mode System Overview 252
8-13. Flow Chart - Module Initialization 258
8-14. Flow Chart - Common Transfer Sequence 259
8-15. Flow Chart - Transmit and Receive (Master and Slave) 260
8-16. Flow Chart - FIFO Mode Common Sequence (Master) 262
8-17. Flow Chart - FIFO Mode Transmit and Receive with Word Count (Master) 263
8-18. Flow Chart - FIFO Mode Transmit and Receive without Word Count (Master) 264
8-19. SPI_SYSCONFIG Register 266
8-20. SPI_SYSSTATUS Register 267
8-21. SPI_IRQSTATUS Register 268
8-22. SPI_IRQENABLE Register 270
8-23. SPI_MODULCTRL Register 271
8-24. SPI_CHCONF Register 272
8-25. SPI_CHSTAT Register 275
8-26. SPI_CHCTRL Register 276
8-27. SPI_TX Register 277
8-28. SPI_RX Register 278
8-29. SPI_XFERLEVEL Register 279
9-1. GPTM Module Block Diagram 281
9-2. Input Edge-Count Mode Example, Counting Down 286
9-3. 16-Bit Input Edge-Time Mode Example 287
9-4. 16-Bit PWM Mode Example 288
9-5. GPTMCFG Register 293
9-6. GPTMTAMR Register 294
9-7. GPTMTBMR Register 296
9-8. GPTMCTL Register 298
9-9. GPTMIMR Register 300
9-10. GPTMRIS Register 302

Copyright © 2017, Texas Instruments Incorporated

9-11. GPTMMIS Register 304
9-12. GPTMICR Register 306
9-13. GPTMTAILR Register 308
9-14. GPTMTBILR Register 309
9-15. GPTMTAMATCHR Register 310
9-16. GPTMTBMATCHR Register 311
9-17. GPTMTAPR Register 312
9-18. GPTMTBPR Register 313
9-19. GPTMTAPMR Register 314
9-20. GPTMTBPMR Register 315
9-21. GPTMTAR Register 316
9-22. GPTMTBR Register 317
9-23. GPTMTAV Register 318
9-24. GPTMTBV Register 319
9-25. GPTMDMAEV Register 320
10-1. WDT Module Block Diagram 323
10-2. WDTLOAD Register 326
10-3. WDTVALUE Register 327
10-4. WDTCTL Register 328
10-5. WDTICR Register 329
10-6. WDTRIS Register 330
10-7. WDTTEST Register 331
10-8. WDTLOCK Register 332
10-9. WatchDog Flow Chart 334
10-10. System WatchDog Recovery Sequence 335
11-1. SDHost Controller Interface Block Diagram 338
11-2. MMCHS_CSRE Register 350
11-3. MMCHS_CON Register 351
11-4. MMCHS_BLK Register 353
11-5. MMCHS_ARG Register 354
11-6. MMCHS_CMD Register 355
11-7. MMCHS_RSP10 Register 357
11-8. MMCHS_RSP32 Register 358
11-9. MMCHS_RSP54 Register 359
11-10. MMCHS_RSP76 Register 360
11-11. MMCHS_DATA Register 361
11-12. MMCHS_PSTATE Register 362
11-13. MMCHS_HCTL Register 364
11-14. MMCHS_SYSCTL Register 365
11-15. MMCHS_STAT Register 367
11-16. MMCHS_IE Register 371
11-17. MMCHS_ISE Register 373
12-1. I2S Protocol 376
12-2. I2S Module 377
12-3. Logical Clock Path 378
12-4. AFIFOREV Register 391
12-5. WFIFOCTL Register 392
12-6. PDIR Register 393
12-7. RFIFOCTL Register 395

Copyright © 2017, Texas Instruments Incorporated

12-8. RFIFOSTS Register 396
12-9. GBLCTL Register 397
12-10. RGBLCTL Register 399
12-11. RMASK Register 401
12-12. RFMT Register 402
12-13. AFSRCTL Register 404
12-14. RTDM Register 405
12-15. RINTCTL Register 406
12-16. RSTAT Register 408
12-17. RSLOT Register 410
12-18. REVTCTL Register 411
12-19. XGBLCTL Register 412
12-20. XMASK Register 414
12-21. XFMT Register 415
12-22. AFSXCTL Register 417
12-23. ACLKXCTL Register 418
12-24. AHCLKXCTL Register 419
12-25. XTDM Register 420
12-26. XINTCTL Register 421
12-27. XSTAT Register 423
12-28. XSLOT Register 425
12-29. XEVTCTL Register 426
12-30. SRCTLn Registers 427
12-31. XBUFn Registers 429
12-32. RBUFn Registers 430
13-1. Architecture of the ADC Module in CC32xx 432
13-2. Operation of the ADC 433
13-3. ADC_CTRL Register 435
13-4. ADC_CH0_IRQ_EN Register 436
13-5. ADC_CH2_IRQ_EN Register 437
13-6. ADC_CH4_IRQ_EN Register 438
13-7. ADC_CH6_IRQ_EN Register 439
13-8. ADC_CH0_IRQ_STATUS Register 440
13-9. ADC_CH2_IRQ_STATUS Register 441
13-10. ADC_CH4_IRQ_STATUS Register 442
13-11. ADC_CH6_IRQ_STATUS Register 443
13-12. ADC_DMA_MODE_EN Register 444
13-13. ADC_TIMER_CONFIGURATION Register 445
13-14. ADC_TIMER_CURRENT_COUNT Register 446
13-15. CHANNEL0FIFODATA Register 447
13-16. CHANNEL2FIFODATA Register 448
13-17. CHANNEL4FIFODATA Register 449
13-18. CHANNEL6FIFODATA Register 450
13-19. ADC_CH0_FIFO_LVL Register 451
13-20. ADC_CH2_FIFO_LVL Register 452
13-21. ADC_CH4_FIFO_LVL Register 453
13-22. ADC_CH6_FIFO_LVL Register 454
13-23. ADC_CH_ENABLE Register 455
14-1. The Camera Module Interfaces 465

Copyright © 2017, Texas Instruments Incorporated

14-2. Synchronization Signals and Frame Timing 466
14-3. Synchronization Signals and Data Timing 466
14-4. Different Scenarios of CAM_P_HS and CAM_P_VS 467
14-5. CAM_P_HS Toggles Between Pixels in Decimation 467
14-6. Parallel Camera I/F State Machine 468
14-7. FIFO Image Data Format 468
14-8. Assertion and De-Assertion of the DMA Request Signal 471
14-9. CC_SYSCONFIG Register 474
14-10. CC_SYSSTATUS Register 475
14-11. CC_IRQSTATUS Register 476
14-12. CC_IRQENABLE Register 478
14-13. CC_CTRL Register 480
14-14. CC_CTRL_DMA Register 482
14-15. CC_CTRL_XCLK Register 483
14-16. CC_FIFODATA Register 484
15-1. Power Management Unit Supports Two Supply Configurations 494
15-2. Sleep Modes 497
15-3. Power Management Control Architecture in CC32xx 499
15-4. CAMCLKCFG Register 510
15-5. CAMCLKEN Register 511
15-6. CAMSWRST Register 512
15-7. MCASPCLKEN Register 513
15-8. MCASPSWRST Register 514
15-9. SDIOMCLKCFG Register 515
15-10. SDIOMCLKEN Register 516
15-11. SDIOMSWRST Register 517
15-12. APSPICLKCFG Register 518
15-13. APSPICLKEN Register 519
15-14. APSPISWRST Register 520
15-15. DMACLKEN Register 521
15-16. DMASWRST Register 522
15-17. GPIO0CLKEN Register 523
15-18. GPIO0SWRST Register 524
15-19. GPIO1CLKEN Register 525
15-20. GPIO1SWRST Register 526
15-21. GPIO2CLKEN Register 527
15-22. GPIO2SWRST Register 528
15-23. GPIO3CLKEN Register 529
15-24. GPIO3SWRST Register 530
15-25. GPIO4CLKEN Register 531
15-26. GPIO4SWRST Register 532
15-27. WDTCLKEN Register 533
15-28. WDTSWRST Register 534
15-29. UART0CLKEN Register 535
15-30. UART0SWRST Register 536
15-31. UART1CLKEN Register 537
15-32. UART1SWRST Register 538
15-33. GPT0CLKCFG Register 539
15-34. GPT0SWRST Register 540

Copyright © 2017, Texas Instruments Incorporated

15-35. GPT1CLKEN Register 541
15-36. GPT1SWRST Register 542
15-37. GPT2CLKEN Register 543
15-38. GPT2SWRST Register 544
15-39. GPT3CLKEN Register 545
15-40. GPT3SWRST Register 546
15-41. MCASPCLKCFG0 Register 547
15-42. MCASPCLKCFG1 Register 548
15-43. I2CLCKEN Register 549
15-44. I2CSWRST Register 550
15-45. LPDSREQ Register 551
15-46. TURBOREQ Register 552
15-47. DSLPWAKECFG Register 553
15-48. DSLPTIMRCFG Register 554
15-49. SLPWAKEEN Register 555
15-50. SLPTMRCFG Register 556
15-51. WAKENWP Register 557
15-52. RCM_IS Register 558
15-53. RCM_IEN Register 559
16-1. Board Configuration to Use Pins 45 and 52 as Digital Signals 564
16-2. Board Configuration to Use Pins 45 and 52 as Digital Signals 565
16-3. I/O Pad Data and Control Path Architecture in CC32xx 588
16-4. Wake on Pad for Hibernate Mode 591
17-1. AES Block Diagram 595
17-2. AES - ECB Feedback Mode 598
17-3. AES - CBC Feedback Mode 599
17-4. AES Encryption With CTR/ICM Mode 600
17-5. AES - CFB Feedback Mode 601
17-6. AES - F8 Mode 602
17-7. AES - XTS Operation 603
17-8. AES - F9 Operation 604
17-9. AES - CBC-MAC Authentication Mode 605
17-10. AES - GCM Operation 606
17-11. AES - CCM Operation 607
17-12. AES Polling Mode 611
17-13. AES Interrupt Service 613
17-14. AES_KEY2_6 Register 615
17-15. AES_KEY2_7 Register 615
17-16. AES_KEY2_4 Register 616
17-17. AES_KEY2_5 Register 616
17-18. AES_KEY2_2 Register 617
17-19. AES_KEY2_3 Register 617
17-20. AES_KEY2_0 Register 618
17-21. AES_KEY2_1 Register 618
17-22. AES_KEY1_6 Register 619
17-23. AES_KEY1_7 Register 619
17-24. AES_KEY1_4 Register 620
17-25. AES_KEY1_5 Register 620
17-26. AES_KEY1_2 Register 621

Copyright © 2017, Texas Instruments Incorporated

17-27. AES_KEY1_3 Register 621
17-28. AES_KEY1_0 Register 622
17-29. AES_KEY1_1 Register 622
17-30. AES_IV_IN_0 Register 623
17-31. AES_IV_IN_1 Register 623
17-32. AES_IV_IN_2 Register 624
17-33. AES_IV_IN_3 Register 624
17-34. AES_CTRL Register 625
17-35. AES_C_LENGTH_0 Register 628
17-36. AES_C_LENGTH_1 Register 629
17-37. AES_AUTH_LENGTH Register 630
17-38. AES_DATA_IN_0 Register 631
17-39. AES_DATA_IN_1 Register 631
17-40. AES_DATA_IN_2 Register 632
17-41. AES_DATA_IN_3 Register 632
17-42. AES_TAG_OUT_0 Register 633
17-43. AES_TAG_OUT_1 Register 633
17-44. AES_TAG_OUT_2 Register 634
17-45. AES_TAG_OUT_3 Register 634
17-46. AES_REVISION Register 635
17-47. AES_SYSCONFIG Register 637
17-48. AES_IRQSTATUS Register 638
17-49. AES_IRQENABLE Register 639
17-50. CRYPTOCLKEN Register 640
17-51. DTHE_AES_IM Register 641
17-52. DTHE_AES_RIS Register 642
17-53. DTHE_AES_MIS Register 643
17-54. DTHE_AES_IC Register 644
18-1. DES Block Diagram 647
18-2. DES – ECB Feedback Mode 649
18-3. DES3DES – CBC Feedback Mode 649
18-4. DES3DES – CFB Feedback Mode 650
18-5. DES Polling Mode 652
18-6. DES Interrupt Service 653
18-7. DES Context Input Event Service 654
18-8. DTHE_DES_IM Register 656
18-9. DTHE_DES_RIS Register 657
18-10. DTHE_DES_MIS Register 658
18-11. DTHE_DES_IC Register 659
18-12. DES_KEY3_L Register 660
18-13. DES_KEY3_H Register 661
18-14. DES_KEY2_L Register 662
18-15. DES_KEY2_H Register 663
18-16. DES_KEY1_L Register 664
18-17. DES_KEY1_H Register 665
18-18. DES_IV_L Register 666
18-19. DES_IV_H Register 667
18-20. DES_CTRL Register 668
18-21. DES_LENGTH Register 669

Copyright © 2017, Texas Instruments Incorporated

18-22. DES_DATA_L Register 670
18-23. DES_DATA_H Register 671
18-24. DES_SYSCONFIG Register 672
18-25. DES_IRQSTATUS Register 673
18-26. DES_IRQENABLE Register 674
19-1. SHA/MD5 Module Block Diagram 676
19-2. SHA/MD5 Polling Mode 685
19-3. SHA/MD5 Interrupt Subroutine 686
19-4. Overview of Public World, Inner and Outer Digest Registers and Usage for MD5, SHA-1, SHA-224/256 ... 688
19-5. SHAMD5_ODIGEST_A Register 690
19-6. SHAMD5_ODIGEST_B Register 691
19-7. SHAMD5_ODIGEST_C Register 692
19-8. SHAMD5_ODIGEST_D Register 693
19-9. SHAMD5_ODIGEST_E Register 694
19-10. SHAMD5_ODIGEST_F Register 695
19-11. SHAMD5_ODIGEST_G Register 696
19-12. SHAMD5_ODIGEST_H Register 697
19-13. SHAMD5_IDIGEST_A Register 698
19-14. SHAMD5_IDIGEST_B Register 699
19-15. SHAMD5_IDIGEST_C Register 700
19-16. SHAMD5_IDIGEST_D Register 701
19-17. SHAMD5_IDIGEST_E Register 702
19-18. SHAMD5_IDIGEST_F Register 703
19-19. SHAMD5_IDIGEST_G Register 704
19-20. SHAMD5_IDIGEST_H Register 705
19-21. SHAMD5_DIGEST_COUNT Register 706
19-22. SHAMD5_MODE Register 707
19-23. SHAMD5_LENGTH Register 709
19-24. SHAMD5_DATA0_IN Register 711
19-25. SHAMD5_DATA1_IN Register 712
19-26. SHAMD5_DATA2_IN Register 713
19-27. SHAMD5_DATA3_IN Register 714
19-28. SHAMD5_DATA4_IN Register 715
19-29. SHAMD5_DATA5_IN Register 716
19-30. SHAMD5_DATA6_IN Register 717
19-31. SHAMD5_DATA7_IN Register 718
19-32. SHAMD5_DATA8_IN Register 719
19-33. SHAMD5_DATA9_IN Register 720
19-34. SHAMD5_DATA10_IN Register 721
19-35. SHAMD5_DATA11_IN Register 722
19-36. SHAMD5_DATA12_IN Register 723
19-37. SHAMD5_DATA13_IN Register 724
19-38. SHAMD5_DATA14_IN Register 725
19-39. SHAMD5_DATA15_IN Register 726
19-40. SHAMD5_SYSCONFIG Register 727
19-41. SHAMD5_IRQSTATUS Register 728
19-42. SHAMD5_IRQENABLE Register 729
19-43. DTHE_SHA_IM Register 730
19-44. DTHE_SHA_RIS Register 731

Copyright © 2017, Texas Instruments Incorporated

19-45. DTHE_SHA_MIS Register 732
19-46. DTHE_SHA_IC Register 733
20-1. CRCCTRL Register 739
20-2. CRCSEED Register 741
20-3. CRCDIN Register 742
20-4. CRCRSLTPP Register 743
21-1. FMA Register 748
21-2. FMD Register 749
21-3. FMC Register 750
21-4. FCRIS Register 752
21-5. FCIM Register 754
21-6. FCMISC Register 755
21-7. FMC2 Register 757
21-8. FWBVAL Register 758
21-9. FWBn Register 759
21-10. CC3220SF Boot Flow 760
21-11. Flash Memory Partition 761
21-12. User Application Image Binary Structure on Serial Flash 762
21-13. On-Chip Flash Programming and Update 763
21-14. Flash Debug Image Layout 764
B-1. DMA_IMR Register 767
B-2. DMA_IMS Register 769
B-3. DMA_IMC Register 771
B-4. DMA_ICR Register 773
B-5. DMA_MIS Register 775
B-6. DMA_RIS Register 777
B-7. GPTTRIGSEL Register 779

Copyright © 2017, Texas Instruments Incorporated

List of Tables

1-1. Register Bit Accessibility and Initial Condition 36
2-1. Summary of Processor Mode, Privilege Level, and Stack Use 50
2-2. Processor Register Map 51
2-3. PSR Register Combinations 53
2-4. Memory Map 55
2-5. SRAM Memory Bit-Banding Regions 56
2-6. Exception Types 59
2-7. CC32xx Application Processor Interrupts 60
2-8. Faults 64
2-9. Fault Status and Fault Address Registers 65
2-10. Cortex-M4 Instruction Summary 67
3-1. Core Peripheral Register Regions 73
3-2. Peripherals Register Map 76
3-3. Cortex Registers 79
3-4. ACTLR Register Field Descriptions 80
3-5. STCTRL Register Field Descriptions 82
3-6. STRELOAD Register Field Descriptions 83
3-7. STCURRENT Register Field Descriptions 84
3-8. EN_0 to EN_6 Register Field Descriptions 85
3-9. DIS_0 to DIS_6 Register Field Descriptions 86
3-10. PEND_0 to PEND_6 Register Field Descriptions 87
3-11. UNPEND_0 to UNPEND_6 Register Field Descriptions 88
3-12. ACTIVE_0 to ACTIVE_6 Register Field Descriptions 89
3-13. PRI_0 to PRI_49 Register Field Descriptions 90
3-14. CPUID Register Field Descriptions 91
3-15. INTCTRL Register Field Descriptions 92
3-16. VTABLE Register Field Descriptions 94
3-17. APINT Register Field Descriptions 95
3-18. SYSCTRL Register Field Descriptions 97
3-19. CFGCTRL Register Field Descriptions 98
3-20. SYSPRI1 Register Field Descriptions 100
3-21. SYSPRI2 Register Field Descriptions 101
3-22. SYSPRI3 Register Field Descriptions 102
3-23. SYSHNDCTRL Register Field Descriptions 103
3-24. FAULTSTAT Register Field Descriptions 107
3-25. HFAULTSTAT Register Field Descriptions 110
3-26. FAULTDDR Register Field Descriptions 111
3-27. SWTRIG Register Field Descriptions 112
4-1. Channel Control Memory 117
4-2. Individual Control Structure 117
4-3. 8-bit Data Peripheral Configuration 122
4-4. µDMA Register Map 124
4-5. DMA Registers 126
4-6. DMA_SRCENDP Register Field Descriptions 127
4-7. DMA_DSTENDP Register Field Descriptions 128
4-8. DMA_CHCTL Register Field Descriptions 129
5-1. GPIO Pad Configuration Examples 134

Copyright © 2017, Texas Instruments Incorporated

5-2. GPIO Interrupt Configuration Example 135
5-3. GPIO Registers 136
5-4. GPIODATA Register Field Descriptions 137
5-5. GPIODIR Register Field Descriptions 138
5-6. GPIOIS Register Field Descriptions 139
5-7. GPIOIBE Register Field Descriptions 140
5-8. GPIOIEV Register Field Descriptions 141
5-9. GPIOIM Register Field Descriptions 142
5-10. GPIORIS Register Field Descriptions 143
5-11. GPIOMIS Register Field Descriptions 144
5-12. GPIOICR Register Field Descriptions 145
5-13. GPIO_TRIG_EN Register Field Descriptions 146
5-14. GPIO Mapping 146
6-1. Flow Control Mode 152
6-2. UART Registers 156
6-3. UARTDR Register Field Descriptions 157
6-4. UARTRSR_UARTECR Register Field Descriptions 158
6-5. UARTFR Register Field Descriptions 160
6-6. UARTIBRD Register Field Descriptions 162
6-7. UARTFBRD Register Field Descriptions 163
6-8. UARTLCRH Register Field Descriptions 164
6-9. UARTCTL Register Field Descriptions 166
6-10. UARTIFLS Register Field Descriptions 168
6-11. UARTIM Register Field Descriptions 169
6-12. UARTRIS Register Field Descriptions 171
6-13. UARTMIS Register Field Descriptions 173
6-14. UARTICR Register Field Descriptions 175
6-15. UARTDMACTL Register Field Descriptions 177
7-1. I2C Signals (64QFN) 181
7-2. Timer Periods 185
7-3. I2C Registers 197
7-4. I2CMSA Register Field Descriptions 198
7-5. I2CMCS Register Field Descriptions 199
7-6. Write Field Decoding for I2CMCS[6:0] 201
7-7. I2CMDR Register Field Descriptions 204
7-8. I2CMTPR Register Field Descriptions 205
7-9. I2CMIMR Register Field Descriptions 206
7-10. I2CMRIS Register Field Descriptions 208
7-11. I2CMMIS Register Field Descriptions 210
7-12. I2CMICR Register Field Descriptions 212
7-13. I2CMCR Register Field Descriptions 214
7-14. I2CMCLKOCNT Register Field Descriptions 215
7-15. I2CMBMON Register Field Descriptions 216
7-16. I2CMBLEN Register Field Descriptions 217
7-17. I2CMBCNT Register Field Descriptions 218
7-18. I2CSOAR Register Field Descriptions 219
7-19. I2CSCSR Register Field Descriptions 220
7-20. I2CSDR Register Field Descriptions 222
7-21. I2CSIMR Register Field Descriptions 223

Copyright © 2017, Texas Instruments Incorporated

7-22. I2CSRIS Register Field Descriptions 225
7-23. I2CSMIS Register Field Descriptions 227
7-24. I2CSICR Register Field Descriptions 229
7-25. I2CSOAR2 Register Field Descriptions 231
7-26. I2CSACKCTL Register Field Descriptions 232
7-27. I2CFIFODATA Register Field Descriptions 233
7-28. I2CFIFOCTL Register Field Descriptions 234
7-29. I2CFIFOSTATUS Register Field Descriptions 236
7-30. I2CPP Register Field Descriptions 237
7-31. I2CPC Register Field Descriptions 238
8-1. SPI Interface 241
8-2. Phase and Polarity Combinations 243
8-3. Clock Ratio Granularity 248
8-4. Granularity Examples 248
8-5. SPI Word Length WL 248
8-6. SPI Registers 265
8-7. SPI_SYSCONFIG Register Field Descriptions 266
8-8. SPI_SYSSTATUS Register Field Descriptions 267
8-9. SPI_IRQSTATUS Register Field Descriptions 268
8-10. SPI_IRQENABLE Register Field Descriptions 270
8-11. SPI_MODULCTRL Register Field Descriptions 271
8-12. SPI_CHCONF Register Field Descriptions 272
8-13. SPI_CHSTAT Register Field Descriptions 275
8-14. SPI_CHCTRL Register Field Descriptions 276
8-15. SPI_TX Register Field Descriptions 277
8-16. SPI_RX Register Field Descriptions 278
8-17. SPI_XFERLEVEL Register Field Descriptions 279
9-1. Available CCP Pins and PWM Outputs/Signals Pins 282
9-2. General-Purpose Timer Capabilities 282
9-3. Counter Values When the Timer is Enabled in Periodic or One-Shot Modes 283
9-4. 16-Bit Timer With Prescaler Configurations 284
9-5. Counter Values When the Timer is Enabled in Input Edge-Count Mode 285
9-6. Counter Values When the Timer is Enabled in Input Edge-Time Mode 286
9-7. Counter Values When the Timer is Enabled in PWM Mode 287
9-8. Timer Registers 292
9-9. GPTMCFG Register Field Descriptions 293
9-10. GPTMTAMR Register Field Descriptions 294
9-11. GPTMTBMR Register Field Descriptions 296
9-12. GPTMCTL Register Field Descriptions 298
9-13. GPTMIMR Register Field Descriptions 300
9-14. GPTMRIS Register Field Descriptions 302
9-15. GPTMMIS Register Field Descriptions 304
9-16. GPTMICR Register Field Descriptions 306
9-17. GPTMTAILR Register Field Descriptions 308
9-18. GPTMTBILR Register Field Descriptions 309
9-19. GPTMTAMATCHR Register Field Descriptions 310
9-20. GPTMTBMATCHR Register Field Descriptions 311
9-21. GPTMTAPR Register Field Descriptions 312
9-22. GPTMTBPR Register Field Descriptions 313

Copyright © 2017, Texas Instruments Incorporated

9-23. GPTMTAPMR Register Field Descriptions 314
9-24. GPTMTBPMR Register Field Descriptions 315
9-25. GPTMTAR Register Field Descriptions 316
9-26. GPTMTBR Register Field Descriptions 317
9-27. GPTMTAV Register Field Descriptions 318
9-28. GPTMTBV Register Field Descriptions 319
9-29. GPTMDMAEV Register Field Descriptions 320
10-1. WATCHDOG Registers 325
10-2. WDTLOAD Register Field Descriptions 326
10-3. WDTVALUE Register Field Descriptions 327
10-4. WDTCTL Register Field Descriptions 328
10-5. WDTICR Register Field Descriptions 329
10-6. WDTRIS Register Field Descriptions 330
10-7. WDTTEST Register Field Descriptions 331
10-8. WDTLOCK Register Field Descriptions 332
11-1. Card Types 344
11-2. Throughput Data 345
11-3. Base Address of SD-Host (also referred as MMCHS) 349
11-4. SD-HOST Registers 349
11-5. MMCHS_CSRE Register Field Descriptions 350
11-6. MMCHS_CON Register Field Descriptions 351
11-7. MMCHS_BLK Register Field Descriptions 353
11-8. MMCHS_ARG Register Field Descriptions 354
11-9. MMCHS_CMD Register Field Descriptions 355
11-10. MMCHS_RSP10 Register Field Descriptions 357
11-11. MMCHS_RSP32 Register Field Descriptions 358
11-12. MMCHS_RSP54 Register Field Descriptions 359
11-13. MMCHS_RSP76 Register Field Descriptions 360
11-14. MMCHS_DATA Register Field Descriptions 361
11-15. MMCHS_PSTATE Register Field Descriptions 362
11-16. MMCHS_HCTL Register Field Descriptions 364
11-17. MMCHS_SYSCTL Register Field Descriptions 365
11-18. MMCHS_STAT Register Field Descriptions 367
11-19. MMCHS_IE Register Field Descriptions 371
11-20. MMCHS_ISE Register Field Descriptions 373
12-1. ulIntFlags Parameter 385
12-2. ulStatFlags Parameter 385
12-3. I2S Registers Accessed Through Peripheral Configuration Port 389
12-4. I2S Registers Accessed Through DMA Port 390
12-5. I2S AFIFO Registers Accessed Through Peripheral Configuration Port 390
12-6. AFIFOREV Register Field Descriptions 391
12-7. WFIFOCTL Register Field Descriptions 392
12-8. PDIR Register Field Descriptions 393
12-9. RFIFOCTL Register Field Descriptions 395
12-10. RFIFOSTS Register Field Descriptions 396
12-11. GBLCTL Register Field Descriptions 397
12-12. RGBLCTL Register Field Descriptions 399
12-13. RMASK Register Field Descriptions 401
12-14. RFMT Register Field Descriptions 402

Copyright © 2017, Texas Instruments Incorporated

12-15. AFSRCTL Register Field Descriptions 404
12-16. RTDM Register Field Descriptions 405
12-17. RINTCTL Register Field Descriptions 406
12-18. RSTAT Register Field Descriptions 408
12-19. RSLOT Register Field Descriptions 410
12-20. REVTCTL Register Field Descriptions 411
12-21. XGBLCTL Register Field Descriptions 412
12-22. XMASK Register Field Descriptions 414
12-23. XFMT Register Field Descriptions 415
12-24. AFSXCTL Register Field Descriptions 417
12-25. ACLKXCTL Register Field Descriptions 418
12-26. AHCLKXCTL Register Field Descriptions 419
12-27. XTDM Register Field Descriptions 420
12-28. XINTCTL Register Field Descriptions 421
12-29. XSTAT Register Field Descriptions 423
12-30. XSLOT Register Field Descriptions 425
12-31. XEVTCTL Register Field Descriptions 426
12-32. SRCTLn Register Field Descriptions 427
12-33. XBUFn Register Field Descriptions 429
12-34. RBUFn Register Field Descriptions 430
13-1. ADC Registers 433
13-2. ADC_MODULE Registers 434
13-3. ADC_CTRL Register Field Descriptions 435
13-4. ADC_CH0_IRQ_EN Register Field Descriptions 436
13-5. ADC_CH2_IRQ_EN Register Field Descriptions 437
13-6. ADC_CH4_IRQ_EN Register Field Descriptions 438
13-7. ADC_CH6_IRQ_EN Register Field Descriptions 439
13-8. ADC_CH0_IRQ_STATUS Register Field Descriptions 440
13-9. ADC_CH2_IRQ_STATUS Register Field Descriptions 441
13-10. ADC_CH4_IRQ_STATUS Register Field Descriptions 442
13-11. ADC_CH6_IRQ_STATUS Register Field Descriptions 443
13-12. ADC_DMA_MODE_EN Register Field Descriptions 444
13-13. ADC_TIMER_CONFIGURATION Register Field Descriptions 445
13-14. ADC_TIMER_CURRENT_COUNT Register Field Descriptions 446
13-15. CHANNEL0FIFODATA Register Field Descriptions 447
13-16. CHANNEL2FIFODATA Register Field Descriptions 448
13-17. CHANNEL4FIFODATA Register Field Descriptions 449
13-18. CHANNEL6FIFODATA Register Field Descriptions 450
13-19. ADC_CH0_FIFO_LVL Register Field Descriptions 451
13-20. ADC_CH2_FIFO_LVL Register Field Descriptions 452
13-21. ADC_CH4_FIFO_LVL Register Field Descriptions 453
13-22. ADC_CH6_FIFO_LVL Register Field Descriptions 454
13-23. ADC_CH_ENABLE Register Field Descriptions 455
13-24. ulChannel Tags 456
13-25. ulIntFlags Tags 457
14-1. Image Sensor Interface Signals 466
14-2. Ratio of the XCLK Frequency Generator 470
14-3. Camera Registers 473
14-4. CC_SYSCONFIG Register Field Descriptions 474

Copyright © 2017, Texas Instruments Incorporated

14-5. CC_SYSSTATUS Register Field Descriptions 475
14-6. CC_IRQSTATUS Register Field Descriptions 476
14-7. CC_IRQENABLE Register Field Descriptions 478
14-8. CC_CTRL Register Field Descriptions 480
14-9. CC_CTRL_DMA Register Field Descriptions 482
14-10. CC_CTRL_XCLK Register Field Descriptions 483
14-11. CC_FIFODATA Register Field Descriptions 484
15-1. Possible PM State Combinations of Application Processor and Network Subsystem (NWP+WLAN) 498
15-2. Peripheral Macro Table 506
15-3. PRCM Registers 508
15-4. CAMCLKCFG Register Field Descriptions 510
15-5. CAMCLKEN Register Field Descriptions 511
15-6. CAMSWRST Register Field Descriptions 512
15-7. MCASPCLKEN Register Field Descriptions 513
15-8. MCASPSWRST Register Field Descriptions 514
15-9. SDIOMCLKCFG Register Field Descriptions 515
15-10. SDIOMCLKEN Register Field Descriptions 516
15-11. SDIOMSWRST Register Field Descriptions 517
15-12. APSPICLKCFG Register Field Descriptions 518
15-13. APSPICLKEN Register Field Descriptions 519
15-14. APSPISWRST Register Field Descriptions 520
15-15. DMACLKEN Register Field Descriptions 521
15-16. DMASWRST Register Field Descriptions 522
15-17. GPIO0CLKEN Register Field Descriptions 523
15-18. GPIO0SWRST Register Field Descriptions 524
15-19. GPIO1CLKEN Register Field Descriptions 525
15-20. GPIO1SWRST Register Field Descriptions 526
15-21. GPIO2CLKEN Register Field Descriptions 527
15-22. GPIO2SWRST Register Field Descriptions 528
15-23. GPIO3CLKEN Register Field Descriptions 529
15-24. GPIO3SWRST Register Field Descriptions 530
15-25. GPIO4CLKEN Register Field Descriptions 531
15-26. GPIO4SWRST Register Field Descriptions 532
15-27. WDTCLKEN Register Field Descriptions 533
15-28. WDTSWRST Register Field Descriptions 534
15-29. UART0CLKEN Register Field Descriptions 535
15-30. UART0SWRST Register Field Descriptions 536
15-31. UART1CLKEN Register Field Descriptions 537
15-32. UART1SWRST Register Field Descriptions 538
15-33. GPT0CLKCFG Register Field Descriptions 539
15-34. GPT0SWRST Register Field Descriptions 540
15-35. GPT1CLKEN Register Field Descriptions 541
15-36. GPT1SWRST Register Field Descriptions 542
15-37. GPT2CLKEN Register Field Descriptions 543
15-38. GPT2SWRST Register Field Descriptions 544
15-39. GPT3CLKEN Register Field Descriptions 545
15-40. GPT3SWRST Register Field Descriptions 546
15-41. MCASPCLKCFG0 Register Field Descriptions 547
15-42. MCASPCLKCFG1 Register Field Descriptions 548

Copyright © 2017, Texas Instruments Incorporated

15-43. I2CLCKEN Register Field Descriptions 549
15-44. I2CSWRST Register Field Descriptions 550
15-45. LPDSREQ Register Field Descriptions 551
15-46. TURBOREQ Register Field Descriptions 552
15-47. DSLPWAKECFG Register Field Descriptions 553
15-48. DSLPTIMRCFG Register Field Descriptions 554
15-49. SLPWAKEEN Register Field Descriptions 555
15-50. SLPTMRCFG Register Field Descriptions 556
15-51. WAKENWP Register Field Descriptions 557
15-52. RCM_IS Register Field Descriptions 558
15-53. RCM_IEN Register Field Descriptions 559
16-1. GPIO Pin Electrical Specifications (25 C)(Except Pin 29, 30, 45, 50, 52, 53) 562
16-2. GPIO Pin Electrical Specifications (25 C) For Pins 29, 30, 45, 50, 52, 53 562
16-3. Pin Internal Pullup and Pulldown Electrical Specifications (25 C) 562
16-4. Analog Mux Control Registers and Bits 566
16-5. Board Level Behavior 567
16-6. GPIO/Pins Available for Application 568
16-7. Pin Multiplexing 571
16-8. Pin Groups for I2S 585
16-9. Pin Groups for SPI 585
16-10. Pin Groups for SD-Card I/F 585
16-11. Pad Configuration Registers 586
16-12. GPIO_PAD_CONFIG_0 to GPIO_PAD_CONFIG_32 Register Description 587
16-13. Recommended Pin Multiplexing Configurations 589
16-14. Sense-on-Power Configurations 592
17-1. Key-Block-Round Combinations 597
17-2. Interrupts and Events 608
17-3. AES Registers 614
17-4. AES_KEY2_6 Register Field Descriptions 615
17-5. AES_KEY2_7 Register Field Descriptions 615
17-6. AES_KEY2_4 Register Field Descriptions 616
17-7. AES_KEY2_5 Register Field Descriptions 616
17-8. AES_KEY2_2 Register Field Descriptions 617
17-9. AES_KEY2_3 Register Field Descriptions 617
17-10. AES_KEY2_0 Register Field Descriptions 618
17-11. AES_KEY2_1 Register Field Descriptions 618
17-12. AES_KEY1_6 Register Field Descriptions 619
17-13. AES_KEY1_7 Register Field Descriptions 619
17-14. AES_KEY1_4 Register Field Descriptions 620
17-15. AES_KEY1_5 Register Field Descriptions 620
17-16. AES_KEY1_2 Register Field Descriptions 621
17-17. AES_KEY1_3 Register Field Descriptions 621
17-18. AES_KEY1_0 Register Field Descriptions 622
17-19. AES_KEY1_1 Register Field Descriptions 622
17-20. AES_IV_IN_0 Register Field Descriptions 623
17-21. AES_IV_IN_1 Register Field Descriptions 623
17-22. AES_IV_IN_2 Register Field Descriptions 624
17-23. AES_IV_IN_3 Register Field Descriptions 624
17-24. AES_CTRL Register Field Descriptions 625

Copyright © 2017, Texas Instruments Incorporated

17-25. AES_C_LENGTH_0 Register Field Descriptions 628
17-26. AES_C_LENGTH_1 Register Field Descriptions 629
17-27. AES_AUTH_LENGTH Register Field Descriptions 630
17-28. AES_DATA_IN_0 Register Field Descriptions 631
17-29. AES_DATA_IN_1 Register Field Descriptions 631
17-30. AES_DATA_IN_2 Register Field Descriptions 632
17-31. AES_DATA_IN_3 Register Field Descriptions 632
17-32. AES_TAG_OUT_0 Register Field Descriptions 633
17-33. AES_TAG_OUT_1 Register Field Descriptions 633
17-34. AES_TAG_OUT_2 Register Field Descriptions 634
17-35. AES_TAG_OUT_3 Register Field Descriptions 634
17-36. AES_REVISION Register Field Descriptions 635
17-37. AES_SYSCONFIG Register Field Descriptions 637
17-38. AES_IRQSTATUS Register Field Descriptions 638
17-39. AES_IRQENABLE Register Field Descriptions 639
17-40. CRYPTOCLKEN Register Field Descriptions 640
17-41. DTHE_AES_IM Register Field Descriptions 641
17-42. DTHE_AES_RIS Register Field Descriptions 642
17-43. DTHE_AES_MIS Register Field Descriptions 643
17-44. DTHE_AES_IC Register Field Descriptions 644
18-1. Key Repartition 646
18-2. . DES Global Initialization 650
18-3. DES Algorithm Type Configuration 650
18-4. 3DES Algorithm Type Configuration 651
18-5. . DES Interrupt Mode 653
18-6. DES DMA Mode 653
18-7. DES Register Map 655
18-8. DTHE_DES_IM Register Field Descriptions 656
18-9. DTHE_DES_RIS Register Field Descriptions 657
18-10. DTHE_DES_MIS Register Field Descriptions 658
18-11. DTHE_DES_IC Register Field Descriptions 659
18-12. DES_KEY3_L Register Field Descriptions 660
18-13. DES_KEY3_H Register Field Descriptions 661
18-14. DES_KEY2_L Register Field Descriptions 662
18-15. DES_KEY2_H Register Field Descriptions 663
18-16. DES_KEY1_L Register Field Descriptions 664
18-17. DES_KEY1_H Register Field Descriptions 665
18-18. DES_IV_L Register Field Descriptions 666
18-19. DES_IV_H Register Field Descriptions 667
18-20. DES_CTRL Register Field Descriptions 668
18-21. DES_LENGTH Register Field Descriptions 669
18-22. DES_DATA_L Register Field Descriptions 670
18-23. DES_DATA_H Register Field Descriptions 671
18-24. DES_SYSCONFIG Register Field Descriptions 672
18-25. DES_IRQSTATUS Register Field Descriptions 673
18-26. DES_IRQENABLE Register Field Descriptions 674
19-1. Interrupts and Events 677
19-2. SHA/MD5 Module Algorithm Selection 678
19-3. Outer Digest Registers 679

Copyright © 2017, Texas Instruments Incorporated

19-4. Inner Digest Registers 679
19-5. SHA Digest Processed in Three Passes 681
19-6. SHA Digest Processed in One Pass 682
19-7. Continuing a Prior HMAC 684
19-8. SHA-1 Apply on the Key 684
19-9. Interrupt Mode 685
19-10. DMA Mode 685
19-11. SHA-MD5 Registers 687
19-12. SHAMD5_ODIGEST_A Register Field Descriptions 690
19-13. SHAMD5_ODIGEST_B Register Field Descriptions 691
19-14. SHAMD5_ODIGEST_C Register Field Descriptions 692
19-15. SHAMD5_ODIGEST_D Register Field Descriptions 693
19-16. SHAMD5_ODIGEST_E Register Field Descriptions 694
19-17. SHAMD5_ODIGEST_F Register Field Descriptions 695
19-18. SHAMD5_ODIGEST_G Register Field Descriptions 696
19-19. SHAMD5_ODIGEST_H Register Field Descriptions 697
19-20. SHAMD5_IDIGEST_A Register Field Descriptions 698
19-21. SHAMD5_IDIGEST_B Register Field Descriptions 699
19-22. SHAMD5_IDIGEST_C Register Field Descriptions 700
19-23. SHAMD5_IDIGEST_D Register Field Descriptions 701
19-24. SHAMD5_IDIGEST_E Register Field Descriptions 702
19-25. SHAMD5_IDIGEST_F Register Field Descriptions 703
19-26. SHAMD5_IDIGEST_G Register Field Descriptions 704
19-27. SHAMD5_IDIGEST_H Register Field Descriptions 705
19-28. SHAMD5_DIGEST_COUNT Register Field Descriptions 706
19-29. SHAMD5_MODE Register Field Descriptions 707
19-30. SHAMD5_LENGTH Register Field Descriptions 709
19-31. SHAMD5_DATA0_IN Register Field Descriptions 711
19-32. SHAMD5_DATA1_IN Register Field Descriptions 712
19-33. SHAMD5_DATA2_IN Register Field Descriptions 713
19-34. SHAMD5_DATA3_IN Register Field Descriptions 714
19-35. SHAMD5_DATA4_IN Register Field Descriptions 715
19-36. SHAMD5_DATA5_IN Register Field Descriptions 716
19-37. SHAMD5_DATA6_IN Register Field Descriptions 717
19-38. SHAMD5_DATA7_IN Register Field Descriptions 718
19-39. SHAMD5_DATA8_IN Register Field Descriptions 719
19-40. SHAMD5_DATA9_IN Register Field Descriptions 720
19-41. SHAMD5_DATA10_IN Register Field Descriptions 721
19-42. SHAMD5_DATA11_IN Register Field Descriptions 722
19-43. SHAMD5_DATA12_IN Register Field Descriptions 723
19-44. SHAMD5_DATA13_IN Register Field Descriptions 724
19-45. SHAMD5_DATA14_IN Register Field Descriptions 725
19-46. SHAMD5_DATA15_IN Register Field Descriptions 726
19-47. SHAMD5_SYSCONFIG Register Field Descriptions 727
19-48. SHAMD5_IRQSTATUS Register Field Descriptions 728
19-49. SHAMD5_IRQENABLE Register Field Descriptions 729
19-50. DTHE_SHA_IM Register Field Descriptions 730
19-51. DTHE_SHA_RIS Register Field Descriptions 731
19-52. DTHE_SHA_MIS Register Field Descriptions 732

Copyright © 2017, Texas Instruments Incorporated

19-53. DTHE_SHA_IC Register Field Descriptions 733
20-1. Endian Configuration 736
20-2. Endian Configuration with Bit Reversal 736
20-3. CRC Registers 738
20-4. CRCCTRL Register Field Descriptions 739
20-5. CRCSEED Register Field Descriptions 741
20-6. CRCDIN Register Field Descriptions 742
20-7. CRCRSLTPP Register Field Descriptions 743
21-1. Flash Registers 747
21-2. FMA Register Field Descriptions 748
21-3. FMD Register Field Descriptions 749
21-4. FMC Register Field Descriptions 750
21-5. FCRIS Register Field Descriptions 752
21-6. FCIM Register Field Descriptions 754
21-7. FCMISC Register Field Descriptions 755
21-8. FMC2 Register Field Descriptions 757
21-9. FWBVAL Register Field Descriptions 758
21-10. FWBn Register Field Descriptions 759
A-1. Peripheral Samples 765
B-1. Miscellaneous Register Summary 766
B-2. DMA_IMR Register Field Descriptions 767
B-3. DMA_IMS Register Field Descriptions 769
B-4. DMA_IMC Register Field Descriptions 771
B-5. DMA_ICR Register Field Descriptions 773
B-6. DMA_MIS Register Field Descriptions 775
B-7. DMA_RIS Register Field Descriptions 777
B-8. GPTTRIGSEL Register Field Descriptions 779

Copyright © 2017, Texas Instruments Incorporated

Copyright © 2017, Texas Instruments Incorporated

Architecture Overview

Topic **Page**

1.1 Introduction 36
1.2 Architecture Overview 37
1.3 Functional Overview 38

Copyright © 2017, Texas Instruments Incorporated

1.1 Introduction

The CC3220 device is part of the SimpleLink™ microcontroller (MCU) platform which consists of Wi-Fi®, Bluetooth® low energy, Sub-1 GHz and host MCUs, which all share a common, easy-to-use development environment with a single core software development kit (SDK) and rich tool set. A one-time integration of the SimpleLink platform enables you to add any combination of the portfolio's devices into your design, allowing 100 percent code reuse when your design requirements change. For more information, visit www.ti.com/simplelink.

The applications MCU subsystem contains an industry-standard ARM Cortex-M4 core running at 80 MHz. The device includes a wide variety of peripherals, including a fast parallel camera interface, I2S, SD, UART, SPI, I2C, and four-channel ADC. The CC32xx family includes flexible embedded RAM for code and data, and ROM with external serial flash bootloader and peripheral drivers.

The Wi-Fi network processor subsystem features a Wi-Fi Internet-on-a-chip, and contains an additional dedicated ARM MCU that completely offloads the applications MCU. This subsystem includes an 802.11 b/g/n radio, baseband, and MAC with a powerful crypto engine for fast, secure Internet connections with 256-bit encryption. The CC32xx device supports Station, Access Point, and Wi-Fi Direct modes. The device also supports WPA2 personal and enterprise security and WPS 2.0. The Wi-Fi Internet-on-a-chip includes embedded TCP/IP and TLS/SSL stacks, HTTP server, and multiple Internet protocols.

About This Manual

This manual describes the modules and peripherals of the SimpleLink CC32xx wireless MCU. Each description presents the module or peripheral in a general sense. Not all features and functions of all modules or peripherals may be present on all devices. Pin functions, internal signal connections, and operational parameters differ from device to device. The user should consult the device-specific data sheet for these details.

1.1.1 Related Documentation

Additional documentation about the device can be accessed from these links from Texas Instruments http://www.ti.com/simplelinkwifi and http://www.ti.com/simplelinkwifi-wiki

1.1.2 Register Bit Conventions

Each register is shown with a key indicating the accessibility of the individual bit, and the initial condition:

Table 1-1. Register Bit Accessibility and Initial Condition

Key Bit	Accessibility
rw	Read/write
r	Read only
r0	Read as 0
r1	Read as 1
w	Write only
w0	Write as 0
w1	Write as 1
(w)	No register bit implemented; writing a 1 results in a pulse. The register bit is always read as 0.
h0	Cleared by hardware
h1	Set by hardware
-0, -1	Condition after PUC
-(0), -(1)	Condition after POR
-[0], -[1]	Condition after BOR
-{0},-{1}	Condition after Brownout

Copyright © 2017, Texas Instruments Incorporated

1.2 Architecture Overview

The building blocks of CC32xx system-on-chip are shown in Figure 1-1

Figure 1-1. CC32xx MCU and WIFI System-on-Chip

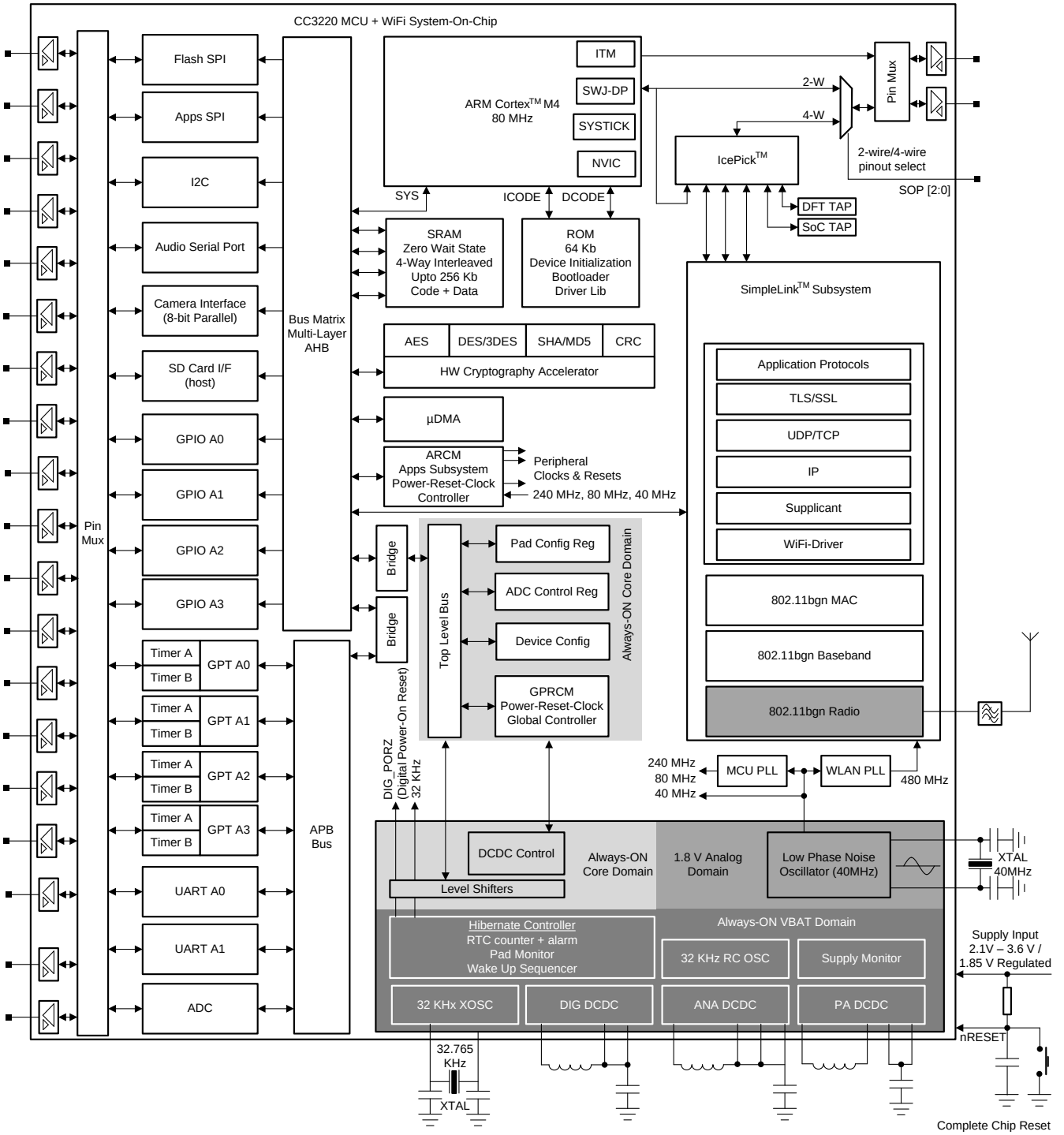

Copyright © 2017, Texas Instruments Incorporated

1.3 Functional Overview

The following sections provide an overview of the main components of the CC32xx system on chip (SoC) from a microcontroller point of view.

1.3.1 Processor Core

1.3.1.1 ARM Cortex™ M4 Processor Core

The CC32xx application MCU subsystem is built around an ARM Cortex-M4 processor core, which provides outstanding computational performance and exceptional system response to interrupts at low power consumption, while optimizing memory footprint – making it an ideal fit for embedded applications.

Key features of ARM Cortex-M4 processor core are:

- Thumb-2 mixed 16- and 32-bit instruction set delivers the high performance expected of a 32-bit ARM core in a compact memory size – enabling richer applications within a given device memory size.
- Single-cycle multiply instruction and hardware divide
- Atomic bit manipulation (bit-banding), delivering maximum memory use and streamlined peripheral control
- Unaligned data access, enabling data to be efficiently packed into memory
- Fast code execution, permitting slower processor clock or increased sleep mode time.
- Hardware division and fast multiplier
- Deterministic, high-performance interrupt handling for time-critical applications
- Bit-band support for memory and select peripherals that includes atomic bit-band write and read operations
- Configurable 4-pin JTAG and 2-pin (SWJ-DP) debug access
- Flash patch and breakpoint (FPB) unit to implement breakpoints and code patches
- Ultra-low power sleep modes
- Low active power consumption
- 80-MHz operation

1.3.1.2 System Timer (SysTick)

The ARM Cortex-M4 processor core includes an integrated system timer, SysTick. SysTick provides a simple, 24-bit, clear-on-write, decrementing, wrap-on-zero counter with a flexible control mechanism. The counter is clocked on the system clock.

SysTick makes OS porting between Cortex-M4 devices much easier because there is no need to change the OS system timer code. The SysTick timer integrates with the NVIC and can generate a SysTick exception (exception type 15). In many OSes, a hardware timer generates interrupts so that the OS can perform task management (for example, to allow multiple tasks to run at different time slots and to ensure that no single task can lock up the entire system). To perform this function, the timer must be able to generate interrupts and, if possible, be protected from user tasks so that user applications cannot change the timer behavior.

The counter can be used in several different ways:

- An RTOS tick timer that fires at a programmable rate (for example, 100 Hz) and invokes a SysTick routine
- A high-speed alarm timer using the system clock
- A simple counter used to measure time to completion and time used
- An internal clock-source control based on missing or meeting durations

Copyright © 2017, Texas Instruments Incorporated

1.3.1.3 Nested Vector Interrupt Controller (NVIC)

The CC32xx includes the ARM NVIC. The NVIC and Cortex-M3 prioritize and handle all exceptions in handler mode. The processor state is automatically stored to the stack on an exception and automatically restored from the stack at the end of the interrupt service routine (ISR). The interrupt vector is fetched in parallel to the state saving, thus enabling efficient interrupt entry. The processor supports tail-chaining, meaning that back-to-back interrupts can be performed without the overhead of state saving and restoration. The NVIC and Cortex-M4 processor prioritize and handle all exceptions in handler mode. The NVIC and the processor core interface are closely coupled to enable low-latency interrupt processing and efficient processing of late-arriving interrupts. The NVIC maintains knowledge of the stacked, or nested, interrupts to enable tail-chaining of interrupts.

Key features are:

- Exceptional interrupt handling through hardware implementation of required register manipulations
- Deterministic, fast interrupt processing: always 12 cycles, or just 6 cycles with tail-chaining
- Programmable priority level for each interrupt
- Low-latency interrupt and exception handling
- Level and pulse detection of interrupt signals
- Grouping of interrupts into group priority and sub-priority interrupts
- Tail chaining of interrupts

1.3.1.4 System Control Block

The system control block (SCB) provides system implementation information and system control, including configuration, control, and reporting of system exceptions.

1.3.2 Memory

1.3.2.1 On-Chip SRAM

The CC32xx has up to 256KB of zero wait state, on-chip SRAM, to which application programs are downloaded and executed. The SRAM is used for both code and data, and is connected to the Multi-Layer-AHB bus-matrix of the chip. There is no restriction on relative size or partitioning of code and data.

The micro-direct memory access (μDMA) controller can transfer data to and from SRAM and various peripherals. The SRAM banks implement an advanced 4-way interleaved architecture which almost eliminates the performance penalty when DMA and processor simultaneously access the SRAM.

Internal RAM has selective retention capability during low-power deep-sleep (LPDS) mode. Based on need, during LPDS mode the application can choose to retain 256KB, 192KB, 128KB, or 64KB. Retaining the memory during low-power mode provides a faster wakeup. TI provides an easy-to-use power management framework for processor and peripheral context save and restore mechanism based on SRAM retention. For more information, refer to the Power Management Framework User Guide in Section 15.5.

1.3.2.2 ROM

CC32xx comes with factory programmed zero-wait-state ROM with the following firmware components:

- Device initialization
- Bootloader
- Peripheral driver library (DriverLib) release for product-specific peripherals and interfaces

When the CC32xx powers up, or the chip reset is released or returns from hibernate mode, the device initialization procedure is executed first. After the chip hardware has been correctly configured, the bootloader is executed, which loads the application code from non-volatile memory into on-chip SRAM and makes a jump to the application code entry point.

The CC32xx DriverLib is a software library that controls on-chip peripherals. The library performs both peripheral initialization and control functions, with a choice of polled or interrupt-driven peripheral support.

Copyright © 2017, Texas Instruments Incorporated

The ROM DriverLib provides a rich set of drivers for peripheral and chip. It is aimed at reducing application development time and improving solution robustness. TI recommends that applications make extensive use of the DriverLib APIs to optimize memory and MIPS requirement of end applications.

1.3.2.3 Flash Memory

The CC3220SF comes with an on-chip flash memory of 1024 KB, allowing application code to execute in-place while freeing up SRAM to be used exclusively for read-write data. The flash memory is used for code and constant data sections, and is directly attached to the ICODE/DCODE bus of the Cortex-M4 core. A 128-bit wide instruction pre-fetch buffer allows maximum performance to be maintained for linear code, or loops that fit inside the buffer.

The flash memory is organized as 2-KB sectors that can be independently erased. Reads and writes can be performed at word (32-bit) level.

1.3.3 Micro Direct Memory Access Controller (µDMA)

The CC32xx microcontroller includes a multichannel DMA controller, or µDMA. The µDMA controller provides a way to offload data-transfer tasks from the Cortex-M4 processor, allowing more efficient use of the processor and the available bus bandwidth. The µDMA controller can perform transfers between memory and peripherals; it has dedicated channels for each supported on-chip module. The µDMA controller can be programmed to automatically perform transfers between peripherals and memory as the peripheral is ready to transfer more data.

The µDMA controller provides the following features:

- 32 configurable channels
- 80-MHz operation
- Support for memory-to-memory, memory-to-peripheral, and peripheral-to-memory in multiple transfer modes
  - Basic and simple transfer scenarios
  - Ping-pong for continuous data flow
  - Scatter-gather for a programmable list of arbitrary transfers initiated from a single request
- Highly flexible and configurable channel operation
  - Independently configured and operated channels
  - Dedicated channels for supported on-chip modules
  - One channel each for receive and transmit path for bidirectional modules
  - Dedicated channel for software-initiated transfers
  - Per-channel configurable bus arbitration scheme
  - Software-initiated requests for any channel
- Two levels of priority
- Design optimizations for improved bus access performance between the µDMA controller and the processor core
  - µDMA controller access subordinate to core access
  - Simultaneous concurrent access
- Data sizes of 8, 16, and 32 bits
- Transfer size is programmable in binary steps from 1 to 1024
- Source and destination address increment size of byte, half-word, word, or no increment
- Maskable peripheral requests
- Interrupt on transfer completion, with a separate interrupt per channel

Copyright © 2017, Texas Instruments Incorporated

1.3.4 General Purpose Timer (GPT)

The CC32xx includes 4 instances of 32-bit user-programmable general purpose timers. GPTs count or time external events that drive the timer input pins. Each GPT module (GPTM) block provides two 16-bit timers or counters that can be configured to operate independently as timers or event counters, or configured to operate as one 32-bit timer. The GPTM contains GPTM blocks with the following functional options:

- Operating modes:
  - 16- or 32-bit programmable one-shot timer
  - 16- or 32-bit programmable periodic timer
  - 16-bit general-purpose timer with an 8-bit prescaler
  - 16-bit input-edge count or time-capture modes
  - 16-bit pulse-width modulation (PWM) mode with software-programmable output inversion of the PWM signal
- Count up or down
- Ability to determine the elapsed time between the assertion of the timer interrupt and entry into the ISR
- Can trigger efficient transfers using the µDMA.
  - Dedicated channel for each timer
  - Burst request generated on timer interrupt

1.3.5 Watch Dog Timer (WDT)

The watchdog timer in the CC32xx restarts the system when it gets stuck due to an error and does not respond as expected. The watchdog timer can be configured to generate an interrupt to the microcontroller on its first time-out, and to generate a reset signal on its second time-out. Once the watchdog timer is configured, the lock register can be written to prevent the timer configuration from being inadvertently altered.

The watchdog timer provides the following features:

- 32-bit down-counter with a programmable load register
- Programmable interrupt generation logic with interrupt masking
- Lock register protection from runaway software
- Reset generation logic

1.3.6 Multi-Channel Audio Serial Port (McASP)

The CC32xx includes a configurable multichannel audio serial port for glue-less interfacing to audio CODEC and DAC (speaker drivers). The audio port has two serializers or deserializers that can be individually enabled to either transmit or receive and operate synchronously. Key features are:

- Two stereo I2S channels
  - One stereo receive and one stereo transmit lines
  - Two stereo transmit lines
- Programmable clock and frame-sync polarity (rising or falling edge)
- Programmable word length (bits per word): 16 and 24 bits
- Programmable fractional divider for bit-clock generation, up to 9 MHz.

1.3.7 Serial Peripheral Interface (SPI)

The serial peripheral interface (SPI) is a four-wire bidirectional communications interface that converts data between parallel and serial. The SPI module performs serial-to-parallel conversion on data received from a peripheral device, and parallel-to-serial conversion on data transmitted to a peripheral device. The SPI allows a duplex serial communication between a local host and SPI-compliant external devices.

The CC32xx includes one SPI port dedicated to the application. Key features are

Copyright © 2017, Texas Instruments Incorporated

- Programmable interface operation for Freescale SPI, MICROWIRE, or TI synchronous serial interfaces master and slave modes
- 3-pin and 4-pin mode
- Full duplex and half duplex
- Serial clock with programmable frequency, polarity, and phase
- Up to 20-MHz operation
- Programmable chip select polarity
- Programmable delay before the first SPI word is transmitted
- Programmable timing control between chip select and external clock generation
- No dead cycle between two successive words in slave mode
- SPI word lengths of 8, 16, and 32 bits
- Efficient transfers using the µDMA controller
- Programmable interface operation for Freescale SPI, MICROWIRE, or TI-SSI

1.3.8 Inter-Integrated Circuit Interface (I2C)

The inter-integrated circuit (I2C) bus provides bidirectional data transfer through a two-wire design (a serial data line SDA and a serial clock line SCL). The I2C bus interfaces to a wide variety of external I2C devices such as sensors, serial memory, control ports of image sensors, and audio codecs. Multiple slave devices can be connected to the same I2C bus. The CC32xx microcontroller includes one I2C module with the following features:

- Master and slave modes of operation
- Master with arbitration and clock synchronization
- Multi-master support
- 7-bit addressing mode
- Standard (100 Kbps) and fast (400 Kbps) modes

1.3.9 Universal Asynchronous Receiver/Transmitter (UART)

A universal asynchronous receivers/transmitter (UART) is an integrated circuit used for RS-232 serial communications. UARTs contain a transmitter (parallel-to-serial converter) and a receiver (serial-to-parallel converter), each clocked separately.

The CC32xx device includes two fully programmable UARTs. The UART can generate individually-masked interrupts from the RX, TX, modem status, and error conditions. The module generates a single combined interrupt when any of the interrupts are asserted and unmasked.

The UARTs include the following features:

- Programmable baud-rate generator, allowing speeds up to 3 Mbps
- Separate 16 × 8 transmit (TX) and receive (RX) FIFOs to reduce CPU interrupt service loading
- Programmable FIFO length, including 1-byte deep operation providing conventional double-buffered interface
- FIFO trigger levels of 1/8, 1/4, 1/2, 3/4, and 7/8
- Standard asynchronous communication bits for start, stop, and parity
- Line-break generation and detection
- Fully programmable serial interface characteristics:
  - 5, 6, 7, or 8 data bits
  - Even, odd, stick, or no-parity bit generation and detection
  - 1 or 2 stop-bit generation
- RTS and CTS modem handshake support
- Standard FIFO-level and end-of-transmission interrupts
- Efficient transfers using µDMA

Copyright © 2017, Texas Instruments Incorporated

- Separate channels for transmit and receive
- Receive single request asserted when data is in the FIFO; burst request asserted at programmed FIFO level
- Transmit single request asserted when there is space in the FIFO; burst request asserted at programmed FIFO level

1.3.10 General Purpose Input / Output (GPIO)

All digital pins of the CC32xx device and some of the analog pins can be used as a general-purpose input/output (GPIO). The GPIOs are grouped as 4 instance GPIO modules, each 8-bit. Supported features include:

- Up to 24 GPIOs, depending on the functional pin configuration
- Interrupt capability for all GPIO pins
  - Level or edge sensitive
  - Rising or falling edge
  - Selective interrupt masking
- Can trigger DMA operation
- Selectable wakeup source (one out of 6 pins)
- Programmable pad configuration
  - Internal 5-µA pullup and pulldown
  - Configurable drive strength of 2, 4, and 6 mA
  - Open-drain mode
- GPIO register readable through the high-speed internal bus matrix

1.3.11 Analog to Digital Converter (ADC)

The ADC peripheral converts a continuous analog voltage into a discrete digital number. The CC32xx device includes ADC modules with four input channels. Each ADC module features 12-bit conversion resolution for the four input channels. Features include:

- Number of bits: 12-bit
- Effective nominal accuracy: 10 bits
- Four analog input channels
- Automatic round-robin sampling
- Fixed sampling interval of 16 µs per channel
- Automatic 16-bit time-stamping of every ADC samples based on the system clock
- Dedicated DMA channel to transfer ADC channel data to the application RAM.

1.3.12 SD Card Host

The CC32xx includes an SD-Host interface for applications that require mass storage. The SD-Host interface support is limited to 1-bit mode due to chip pin constraints.

1.3.13 Parallel Camera Interface

The CC32xx includes an 8-bit parallel camera port to enable image sensor-based applications.

1.3.14 Debug Interface

The CC32xx supports both IEEE Standard 1149.1 JTAG (4-wire) and the low-pin-count ARM SWD (2-wire) debug interfaces. Depending on the board-level configuration of the sense-on-power pull resistors, by default the chip powers up with either the 4-wire JTAG or the 2-wire SWD interface.

Copyright © 2017, Texas Instruments Incorporated

As shown in Figure 1-1, the 4-wire JTAG signals from the chip pins are routed through an IcePick module. TAPs other than the application MCU are reserved for TI production testing. A TAP select sequence must be sent to the device to connect to the ARM Cortex M4 JTAG TAP. The 2-wire mode, however, directly routes the ARM SWD-TMS and SWD-TCK pins directly to the respective chip pins.

1.3.15 Hardware Cryptography Accelerator

The secure variant of the CC32xx includes a suite of high-throughput, state-of-the-art hardware accelerators for fast computation of ciphers (AES, DES, 3-DES), hashing (SHA, MD5), and CRC algorithms by the application. It is also referred as the data hashing and transform engine (DTHE). Further details about the hardware cryptography accelerator will be addressed in the revision of this manual.

1.3.16 Clock, Reset, and Power Management

The CC32xx system-on-chip includes the necessary clock and power management functionalities to build a standalone battery-operated low power solution. Key features are:

- Primary clocks
  - Slow clock: 32.768 KHz (+/-250 ppm)
    - Used in RTC, Wi-Fi beacon listen timing in low power IDLE mode and some of the chip internal sequencing
    - On-chip, low-power 32-KHz Xtal oscillator
    - Support for externally-fed 32.768-KHz clock
    - On-chip 32-KHz RC oscillator for initial wakeup
  - Fast clock: 40 MHz (+/-20 ppm)
    - Used in Wi-Fi radio and MCU.
    - On-chip low phase-noise 40-MHz Xtal oscillator
    - Support for externally-fed clean 40-MHz clock (such as TCXO)
    - System and peripheral clocks are derived from internal PLL producing 240 MHz
- Flexible reset scheme
  - The following resets are supported in CC32xx:
    - External chip reset pin: the entire chip, including power management, is reset when the nRESET pin is held low.
    - Reset on hibernate: the entire core is reset when the chip goes through a hibernate cycle.
    - Reset on watchdog: the application MCU is reset when the watchdog timer expires.
    - Soft-reset: the application MCU is reset by software
  - Complete system recovery from any stuck-at scenario can be achieved by using a combination of WDT reset and hibernate sleep.
- On-chip power management
  - The CC32xx supports two supply configurations:
    - Wide voltage mode: 2.1 V to 3.6 V
      - Powered by battery (2×1.5 V) or a regulated 3.3-V supply.
    - Regulated 1.85 V
      - For applications with on-board DC-DC regulator
  - A set of 3 on-chip high-efficiency DC-DC converters produce the internal module supply voltages when needed. These switching converters and their frequency plan are optimized to minimize interference to WLAN radio.
    - DIG-DCDC: Produces 0.9 V to 1.2 V for the core digital logic
    - ANA1-DCDC: Produces low-ripple 1.8-V supply for the analog and RF. This is bypassed in the regulated 1.85-V configuration.
    - PA-DCDC: Produces regulated 1.8 V with extremely fast transient regulation for the WLAN RF transmit power amplifier. This is bypassed in the regulated 1.85-V configuration.

Copyright © 2017, Texas Instruments Incorporated

- A set of low-dropout regulators (LDOs) are used in the radio subsystem to further regulate and filter the ANA1-DCDC output before being fed to the analog circuits.
- On-chip factory-trimmed accurate band-gap voltage reference ensures the regulator outputs are stable across process and temperature.

1.3.17 SimpleLink Subsystem

The SimpleLink subsystem provides fast, secured WLAN and Internet connections with 256-bit encryption. The CC32xx device supports station, AP, and Wi-Fi Direct modes. The device also supports WPA2 personal and enterprise security and WPS 2.0. The Wi-Fi network processor includes an embedded IPv6 TCP/IP stack.

This multi-processor subsystem consists of the following:

- IPv6 network processor and Wi-Fi driver
- 802.11 b/g/n MAC
- 802.11 b/g/n PHY
- 802.11 b/g/n Radio

The SimpleLink subsystem is accessible from the application MCU over an asynchronous link, and can be controlled through a complete set of SimpleLink host driver APIs provided as part of the ROM driver library. The mode of usage is similar to that of an external MCU using the CC3120 device.

The co-location of the Wi-Fi subsystem on the same die imposes a few restrictions on the application MCU. These are covered in detail in Chapter 15.

1.3.18 I/O Pads and Pin Multiplexing

The device makes extensive use of pin multiplexing to accommodate the large number of peripheral functions in the smallest possible package. To achieve this configuration, pin multiplexing is controlled using a combination of hardware configuration (at device reset) and register control.

The I/O pad and pin mux sections feature flexible wide-voltage I/Os. Supported features include:

- Programmable drive strength from 2 mA to 14 mA (nominal condition) in steps of 2 mA.
- Open-drain mode
- Output buffer isolation
- Automatic output isolation during reset and hibernate
- Configurable pullup and pulldown (10 µA nominal)
- Software-configurable pad state retention during LPDS
- All digital I/Os are nonfail-safe.

Copyright © 2017, Texas Instruments Incorporated

Cortex-M4 Processor

Topic **Page**

2.1 Overview **47**
2.2 Functional Description **49**

Copyright © 2017, Texas Instruments Incorporated

2.1 Overview

The CC32xx incorporates a dedicated instance of the ARM Cortex-M4 CPU core for executing application code with or without RTOS. This processor core is not used in any manner for running any networking or device management task.

This dedicated ARM Cortex-M4 core, along with large on-chip SRAM, a rich set of peripherals, and advanced DC-DC-based power management, provides a robust, contention-free, high-performance application platform at much lower power, lower cost, and smaller solution size when compared to solutions based on discrete MCUs.

Features include:

- 32-bit ARM Cortex-M4 architecture optimized for small-footprint embedded applications
- 80-MHz operation
- Fast interrupt handling
- Thumb-2 mixed 16-/32-bit instruction set delivers the high performance expected of a 32-bit ARM core in a compact memory size usually associated with 8- and 16-bit devices, typically in the range of a few kilobytes of memory for microcontroller-class applications.
  - Single-cycle multiply instruction and hardware divide
  - Atomic bit manipulation (bit-banding), delivering maximum memory utilization and streamlined peripheral control
  - Unaligned data access, enabling data to be efficiently packed into memory
- 16-bit SIMD vector processing unit
- 3-stage pipeline Harvard architecture
- Hardware division and fast digital-signal-processing orientated multiply accumulate
- Saturating arithmetic for signal processing
- Deterministic, high-performance interrupt handling for time-critical applications
- Enhanced system debug with extensive breakpoints
- Serial-wire debug and serial-wire trace reduce the number of pins required for debugging and tracing
- Low-power consumption with multiple sleep modes

The ARM Cortex-M4 application processor core in the CC32xx does not include the floating point unit and memory protection unit (FPU and MPU).

This chapter provides information on the implementation of the Cortex-M4 application processor in the CC32xx, including the programming model, the memory model, the exception model, fault handling, and power management.

For technical details on the instruction set, see the Cortex-M4 instruction set chapter in the *ARM® Cortex™-M4 Devices Generic User Guide* (ARM DUI 0553A).

2.1.1 Block Diagram

The block diagram is shown in Figure 2-1.

Copyright © 2017, Texas Instruments Incorporated

Figure 2-1. Application CPU Block Diagram

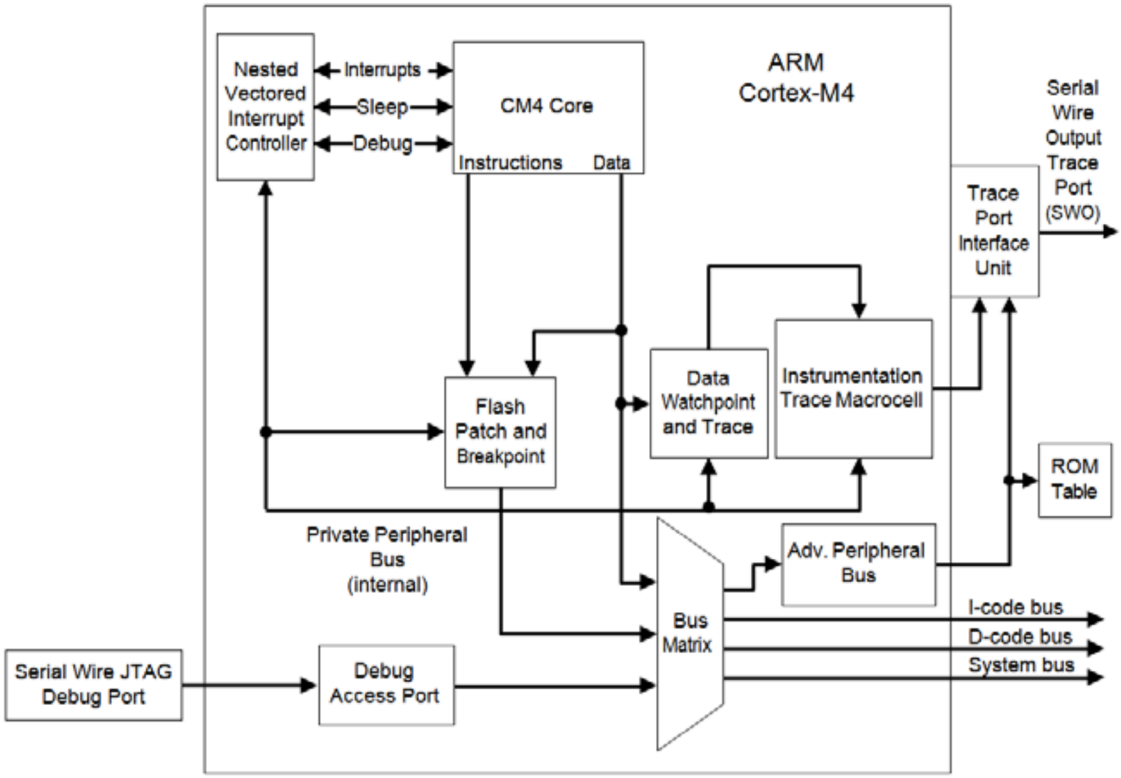

2.1.2 System-Level Interface

The Cortex-M4 application processor in the CC32xx provides multiple interfaces using AMBA™ technology to provide high-speed, low-latency memory accesses. The core supports unaligned data accesses and implements atomic bit manipulation that enables faster peripheral controls, system spinlocks, and thread-safe Boolean data handling.

2.1.3 Integrated Configurable Debug

The Cortex-M4 application processor implements an ARM CoreSight™-compliant serial wire JTAG-debug port (SWJ-DP) interface. The SWJ-DP interface combines the SWD and JTAG debug ports into one module. See the ARM Debug Interface V5 Architecture Specification for details on SWJ-DP.

The 4-bit trace interface from embedded trace macrocell (ETM) is not supported in the CC32xx due to pin limitations. Instead, the processor integrates an instrumentation trace macrocell (ITM) alongside data watchpoints and a profiling unit. A serial-wire viewer (SWV) can export a stream of software-generated messages (printf style debug), data trace, and profiling information through a single pin to enable simple and cost-effective profiling of the system trace events.

The flash patch and breakpoint unit (FPB) provides up to eight hardware breakpoint comparators for debugging. The comparators in the FPB also provide remap functions for up to eight words of program code in the code memory region. FPB also provides code patching capability; however, as the CC32xx application processor implements and executes from SRAM architecture, this type of patching is no longer required.

For more information on the Cortex-M4 debug capabilities, see the ARM Debug Interface V5 Architecture Specification.

Copyright © 2017, Texas Instruments Incorporated

2.1.4 Trace Port Interface Unit (TPIU)

The TPIU acts as a bridge between the Cortex-M4 trace data from the ITM, and an off-chip trace port analyzer, as shown in Figure 2-2.

Figure 2-2. TPIU Block Diagram

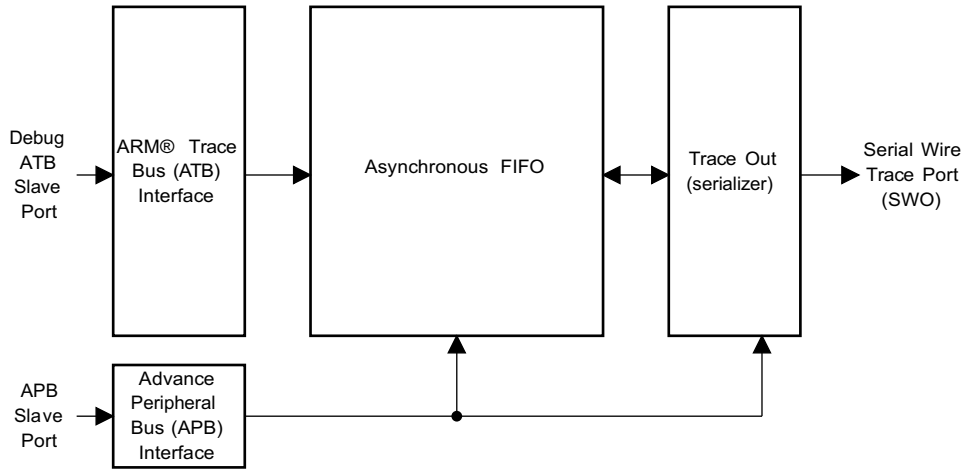

2.1.5 Cortex-M4 System Component Details

The Cortex-M4 application processor core includes the following system components:

- SysTck
  A 24-bit count-down timer used as a real-time operating system (RTOS) tick timer or as a simple counter (see Section 3.2.1).
- Nested Vectored Interrupt Controller (NVIC)
  An embedded interrupt controller that supports low-latency interrupt processing (see *Nested Vectored Interrupt Controller (NVIC)* in Section 3.2.2).
- System Control Block (SCB)
  The programming model interface to the processor. The SCB provides system implementation information and system control, including configuration, control, and reporting of system exceptions (see *System Control Block (SCB)* in Section 3.2.3).

2.2 Functional Description

2.2.1 Programming Model

This section describes the Cortex-M4 programming model and includes the individual core register descriptions, information about the processor modes, and privilege levels for software execution and stacks.

2.2.1.1 Processor Mode and Privilege Levels for Software Execution

The Cortex-M4 has two modes of operation:

- Thread mode, to execute application software. The processor enters thread mode when it comes out of reset.
- Handler mode, to handle exceptions. When the processor has finished exception processing, it returns to thread mode.

Copyright © 2017, Texas Instruments Incorporated

In addition, the Cortex-M4 has two privilege levels:

- Underprivileged
  In this mode, the software has the following restrictions:
  - Limited access to the MSR and MRS instructions, and no use of the CPS instruction
  - No access to the system timer, NVIC, or system control block
  - Possibly restricted access to memory or peripherals
- Privileged
  In this mode, the software can use all instructions and has access to all resources

In thread mode, the CONTROL register controls whether software execution is privileged or unprivileged. In handler mode, software execution is always privileged.

Only privileged software can write to the CONTROL register to change the privilege level for software execution in thread mode. Unprivileged software can use the SVC instruction to make a supervisor call to transfer control to privileged software.

2.2.1.2 Stacks

The processor uses a full descending stack, meaning that the stack pointer indicates the last stacked item on the memory. When the processor pushes a new item onto the stack, it decrements the stack pointer, then writes the item to the new memory location. The processor implements two stacks: the main stack and the process stack, with a pointer for each held in independent registers (see the SP register).

In thread mode, the CONTROL register controls whether the processor uses the main stack or the process stack. In handler mode, the processor always uses the main stack. The options for processor operations are shown in Table 2-1.

Table 2-1. Summary of Processor Mode, Privilege Level, and Stack Use

Processor Mode	Use	Privilege Level	Stack Used
Thread	Applications	Privileged or unprivileged (1)	(1) Main stack or process stack
Handler	Exception handlers	Always privileged	Main stack

(1) See CONTROL register in Section 2.2.2.2.8.

Copyright © 2017, Texas Instruments Incorporated

2.2.2 Register Description

2.2.2.1 Register Map

Figure 2-2 shows the Cortex-M4 register set. Table 2-2 lists the core registers. The core registers are not memory-mapped and are accessed by register name, so the base address is n/a (not applicable) and there is no offset.

Figure 2-3. Cortex-M4 Register Set

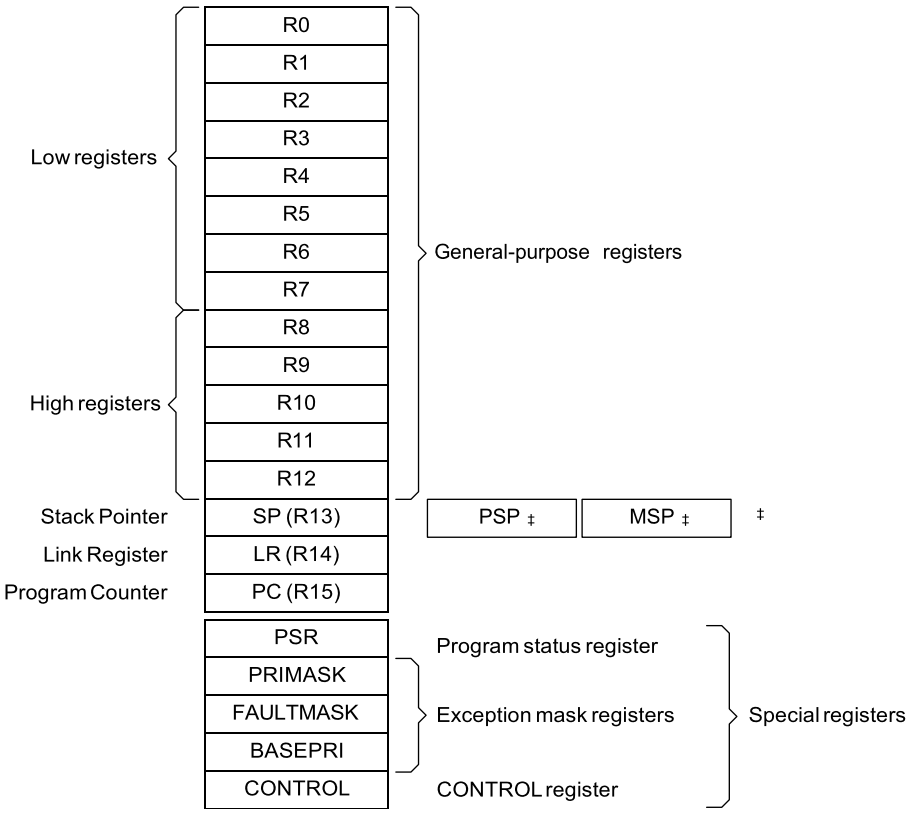

Table 2-2. Processor Register Map

Offset	Name	Type	Reset	Description
-	R0	R/W	-	Cortex General-Purpose Register 0
-	R1	R/W	-	Cortex General-Purpose Register 1
-	R2	R/W	-	Cortex General-Purpose Register 2
-	R3	R/W	-	Cortex General-Purpose Register 3
-	R4	R/W	-	Cortex General-Purpose Register 4
-	R5	R/W	-	Cortex General-Purpose Register 5
-	R6	R/W	-	Cortex General-Purpose Register 6
-	R7	R/W	-	Cortex General-Purpose Register 7
-	R8	R/W	-	Cortex General-Purpose Register 8
-	R9	R/W	-	Cortex General-Purpose Register 9
-	R10	R/W	-	Cortex General-Purpose Register 10
-	R11	R/W	-	Cortex General-Purpose Register 11
-	R12	R/W	-	Cortex General-Purpose Register 12
-	SP	R/W	-	Stack Pointer
-	LR	R/W	0xFFFF.FFFF	Link Register

Copyright © 2017, Texas Instruments Incorporated

Table 2-2. Processor Register Map (continued)

Offset	Name	Type	Reset	Description
-	PC	R/W	-	Program Counter
-	PSR	R/W	0x0100.0000	Program Status Register
-	PRIMASK	R/W	0x0000.0000	Priority Mask Register
-	FAULTMASK	R/W	0x0000.0000	Fault Mask Register
-	BASEPRI	R/W	0x0000.0000	Base Priority Mask Register
-	CONTROL	R/W	0x0000.0000	Control Register
-	FPSC	R/W	-	Floating-Point Status Control (N/A for CC32xx)

2.2.2.2 Register Descriptions

This section lists and describes the Cortex-M4 registers. The core registers are not memory-mapped, and are accessed by register name rather than offset.

NOTE: The register type shown in the register descriptions refers to type during program execution in thread mode and handler mode. Debug access may differ.

The Rn registers are 32-bit general-purpose registers for data operations, and can be accessed from either privileged or unprivileged mode.

2.2.2.2.1 Stack Pointer (SP)

In thread mode, the function of this register changes depending on the ASP bit in the Control Register (CONTROL) register. When the ASP bit is clear, this register is the main stack pointer (MSP). When the ASP bit is set, this register is the process stack pointer (PSP). On reset, the ASP bit is clear, and the processor loads the MSP with the value from address 0x0000 0000. The MSP can only be accessed in privileged mode; the PSP can be accessed in either privileged or unprivileged mode.

2.2.2.2.2 Link Register (LR)

The Link register (LR) stores the return information for subroutines, function calls, and exceptions. The Link register can be accessed from either privileged or unprivileged mode.

EXC_RETURN is loaded into the LR on exception entry.

2.2.2.2.3 Program Counter (PC)

The program counter (PC) contains the current program address. On reset, the processor loads the PC with the value of the reset vector, which is at address 0x0000 0004. Bit 0 of the reset vector is loaded into the THUMB bit of the EPSR at reset and must be 1. The PC register can be accessed in either privileged or unprivileged mode.

2.2.2.2.4 Program Status Register (PSR)

NOTE: This register is also referred to as xPSR.

The Program Status (PSR) register has three functions, and the register bits are assigned to the different functions:

- Application Program Status (APSR) register, bits 31:27, bits 19:16
- Execution Program Status (EPSR) register, bits 26:24, 15:10
- Interrupt Program Status (IPSR) register, bits 7:0

The PSR, IPSR, and EPSR registers can only be accessed in privileged mode; the APSR register can be accessed in either privileged or unprivileged mode.

Copyright © 2017, Texas Instruments Incorporated

APSR contains the current state of the condition flags from previous instruction executions. EPSR contains the Thumb state bit and the execution state bits for the if-then (IT) instruction or the interruptible-continuable instruction (ICI) field for an interrupted load multiple or store multiple instruction. Attempts to read the EPSR directly through application software using the MSR instruction always return zero. Attempts to write the EPSR using the MSR instruction in application software are always ignored. Fault handlers can examine the EPSR value in the stacked PSR to determine the operation that faulted.

IPSR contains the exception type number of the current interrupt service routine (ISR).

These registers can be accessed individually, or as a combination of any two or all three registers, using the register name as an argument to the MSR or MRS instructions. For example, all of the registers can be read using PSR with the MRS instruction, or APSR only can be written to using APSR with the MSR instruction. Table 2-3 shows the possible register combinations for the PSR. See the MRS and MSR instruction descriptions in the Cortex-M4 instruction set chapter in the ARM Cortex-M4 Devices Generic User Guide (ARM DUI 0553A) for more information about how to access the program status registers.

Table 2-3. PSR Register Combinations

Register	Type	Combination
PSR	PSR R/W(1) (2)	APSR, EPSR, and IPSR
IEPSR	RO	EPSR and IPSR
IAPSR	R/W(1)	APSR and IPSR
EAPSR	R/W(2)	APSR and EPSR

(1) The processor ignores writes to the IPSR bits.
(2) Reads of the EPSR bits return zero, and the processor ignores writes to these bits

2.2.2.2.5 Priority Mask Register (PRIMASK)

The PRIMASK register prevents activation of all exceptions with programmable priority. Reset, non-maskable interrupt (NMI), and hard fault are the only exceptions with fixed priority. Exceptions should be disabled when they might impact the timing of critical tasks. This register is only accessible in privileged mode. The MSR and MRS instructions are used to access the PRIMASK register, and the CPS instruction may be used to change the value of the PRIMASK register. See the Cortex-M4 instruction set chapter in the ARM Cortex-M4 Devices Generic User Guide (ARM DUI 0553A) for more information on these instructions.

2.2.2.2.6 Fault Mask Register (FAULTMASK)

The FAULTMASK register prevents activation of all exceptions except for the Non-Maskable Interrupt (NMI). Exceptions should be disabled when they might impact the timing of critical tasks. This register is only accessible in privileged mode. The MSR and MRS instructions are used to access the FAULTMASK register, and the CPS instruction may be used to change the value of the FAULTMASK register. See the Cortex™-M4 instruction set chapter in the ARM® Cortex™-M4 Devices Generic User Guide (ARM DUI 0553A) for more information on these instructions.

2.2.2.2.7 Base Priority Mask Register (BASEPRI)

The BASEPRI register defines the minimum priority for exception processing. When BASEPRI is set to a nonzero value, it prevents the activation of all exceptions with the same or lower priority level as the BASEPRI value. Exceptions should be disabled when they might impact the timing of critical tasks. This register is only accessible in privileged mode.

2.2.2.2.8 Control Register (CONTROL)

The CONTROL register controls the stack used and the privilege level for software execution when the processor is in thread mode, and indicates whether the FPU state is active. This register is only accessible in privileged mode.

Copyright © 2017, Texas Instruments Incorporated

Handler mode always uses the MSP, so the processor ignores explicit writes to the ASP bit of the CONTROL register when in handler mode. The exception entry and return mechanisms automatically update the CONTROL register based on the EXC_RETURN value. In an OS environment, threads running in thread mode should use the process stack, and the kernel and exception handlers should use the main stack. By default, thread mode uses the MSP. To switch the stack pointer used in thread mode to the PSP, either use the MSR instruction to set the ASP bit, as detailed in the Cortex-M4 instruction set chapter in the ARM Cortex-M4 Devices Generic User Guide (ARM DUI 0553A), or perform an exception return to thread mode with the appropriate EXC_RETURN value.

NOTE: When changing the stack pointer, software must use an ISB instruction immediately after the MSR instruction, ensuring that instructions after the ISB execute use the new stack pointer. See the Cortex-M4 instruction set chapter in the ARM Cortex-M4 Devices Generic User Guide (ARM DUI 0553A).

2.2.2.3 Exceptions and Interrupts

The Cortex-M4 application processor in the CC32xx supports interrupts and system exceptions. The processor and the nested vectored interrupt controller (NVIC) prioritize and handle all exceptions. An exception changes the normal flow of software control. The processor uses handler mode to handle all exceptions except for reset. See Section 2.2.4.7 for more information.

The NVIC registers control interrupt handling. See nested vectored interrupt controller (NVIC) for more information.

2.2.2.4 Data Types

The Cortex-M4 supports 32-bit words, 16-bit halfwords, and 8-bit bytes. The processor also supports 64-bit data transfer instructions. All instruction and data memory accesses are little endian.

2.2.3 Memory Model

This section describes the processor memory map, the behavior of memory accesses, and the bit-banding features. The processor has a fixed memory map that provides up to 4 GB of addressable memory.

The memory map of the CC32xx microcontroller subsystem is provided in Table 2-4. In this manual, register addresses are given as a hexadecimal increment, relative to the base address of the module, as shown in the memory map.

The regions for SRAM and peripherals include bit-band regions. Bit-banding provides atomic operations to bit data (see Section 2.2.3.1).

The processor reserves regions of the private peripheral bus (PPB) address range for core peripheral registers (see the *Cortex-M4 Peripherals*, Chapter 3).

NOTE: Within the memory map, attempts to read or write addresses in reserved spaces result in a bus fault. In addition, attempts to write addresses in the flash range also result in a bus fault.

Copyright © 2017, Texas Instruments Incorporated

Table 2-4. Memory Map

Start Address	End Address	Description	Comment
0x0000.0000	0x0007.FFFF	On-chip ROM (Bootloader + DriverLib)	
0x2000.0000	0x2003.FFFF	Bit-banded on-chip SRAM	
0x2200.0000	0x23FF.FFFF	Bit-band alias of 0x2000.0000 through 0x200F.FFFF	
0x4000.0000	0x4000.0FFF	Watchdog timer A0	
0x4000.4000	0x4000.4FFF	GPIO port A0	
0x4000.5000	0x4000.5FFF	GPIO port A1	
0x4000.6000	0x4000.6FFF	GPIO port A2	
0x4000.7000	0x4000.7FFF	GPIO port A3	
0x4000.C000	0x4000.CFFF	UART A0	
0x4000.D000	0x4000.DFFF	UART A1	
0x4002.0000	0x4002.07FF	I ^{2}C A0 (Master)	
0x4002.0800	0x4002.0FFF	I ^{2}C A0 (Slave)	
0x04003.0000	0x4003.0FFF	General-purpose timer A0	
0x04003.1000	0x4003.1FFF	General-purpose timer A1	
0x04003.2000	0x4003.2FFF	General-purpose timer A2	
0x04003.3000	0x4003.3FFF	General-purpose timer A3	
0x400F.7000	0x400F.7FFF	Configuration registers	
0x400F.E000	0x400F.EFFF	System control	
0x400F.F000	0x400F.FFFF	µDMA	
0x4200.0000	0x43FF.FFFF	Bit band alias of 0x4000.0000 through 0x400F.FFFF	
0x4401.C000	0x4401.EFFF	I2S (also referred as McASP)	
0x4402.0000	0x4402.0FFF	FlashSPI	Used for external serial flash
0x4402.1000	0x4402.2FFF	GSPI (also referred to as APSPI)	Used by application processor
0x4402.5000	0x4402.5FFF	MCU reset clock manager	
0x4402.6000	0x4402.6FFF	MCU configuration space	
0xE000.0000	0xE000.0FFF	Instrumentation trace Macrocell™	
0xE000.1000	0xE000.1FFF	Data watchpoint and trace (DWT)	
0xE000.2000	0xE000.2FFF	Flash patch and breakpoint (FPB)	
0xE000.E000	0xE000.EFFF	Cortex-M4 Peripherals (NVIC, SysTick,SCB)	
0xE004.0000	0xE004.0FFF	Trace port interface unit (TPIU)	
0xE004.1000	0xE004.1FFF	Reserved for embedded trace macrocell (ETM)	
0x4402 E800	0x4402 E8B8	ADC	
0x4401 0000	0x4401 02FC	SD Host (Master)	

2.2.3.1 Bit-Banding

A bit-band region maps each word in a bit-band alias region to a single bit in the bit-band region. In ARM Cortex-M4 architecture, the bit-band regions occupy the lowest 1 MB of the SRAM. Accesses to the 32-MB SRAM alias region map to the 1-MB SRAM bit-band region, as shown in Table 2-5.

NOTE: A word access to the SRAM or the peripheral bit-band alias region maps to a single bit in the SRAM or peripheral bit-band region.
A word access to a bit-band address results in a word access to the underlying memory, and similarly for halfword and byte accesses. This allows bit-band accesses to match the access requirements of the underlying peripheral.

The CC32xx family of Wi-Fi microcontrollers support up to 256 Kbyte of on-chip SRAM for code and data. The SRAM starts from address 0x2000 0000.

Copyright © 2017, Texas Instruments Incorporated

Table 2-5. SRAM Memory Bit-Banding Regions

Address Range			
Start	**End**	**Memory Region**	**Instruction and Data Accesses**
0x2000.0000	0x2003.FFFF	SRAM bit-band region	Direct accesses to this memory range behave as SRAM memory accesses, but this region is also bit addressable through bit-band alias.
0x2200.0000	0x23FF.FFFF	SRAM bit-band alias	Data accesses to this region are remapped to bit band region. A write operation is performed as read-modify-write. Instruction accesses are not remapped.

Bit-banding for peripherals is not supported in the CC32xx.

2.2.3.1.1 Directly Accessing an Alias Region

Writing to a word in the alias region updates a single bit in the bit-band region.

Bit 0 of the value written to a word in the alias region determines the value written to the targeted bit in the bit-band region. Writing a value with bit 0 set writes a 1 to the bit-band bit, and writing a value with bit 0 clear writes a 0 to the bit-band bit.

Bits 31:1 of the alias word have no effect on the bit-band bit. Writing 0x01 has the same effect as writing 0xFF. Writing 0x00 has the same effect as writing 0x0E.

When reading a word in the alias region, 0x0000 0000 indicates that the targeted bit in the bit-band region is clear and 0x0000 0001 indicates that the targeted bit in the bit-band region is set.

2.2.3.1.2 Directly Accessing a Bit-Band Region

Behavior of memory accesses describes the behavior of direct byte, halfword, or word accesses to the bit-band regions.

2.2.3.2 Data Storage

The processor views memory as a linear collection of bytes numbered in ascending order from zero. For example, bytes 0-3 hold the first stored word, and bytes 4-7 hold the second stored word. Data is stored in little-endian format, with the least-significant byte (lsbyte) of a word stored at the lowest-numbered byte, and the most-significant byte (msbyte) stored at the highest-numbered byte. Figure 2-4 illustrates how data is stored.

Figure 2-4. Data Storage

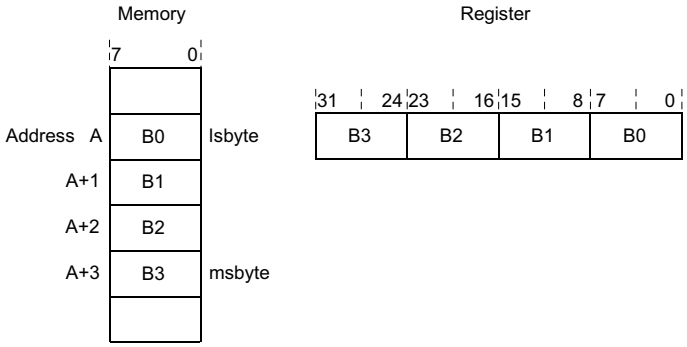

Copyright © 2017, Texas Instruments Incorporated

2.2.3.3 Synchronization Primitives

The Cortex-M4 instruction set includes pairs of synchronization primitives which provide a non-blocking mechanism that a thread or process can use to obtain exclusive access to a memory location. Software can use these primitives to perform a guaranteed read-modify-write memory update sequence or for a semaphore mechanism.

A pair of synchronization primitives consists of:

- A load-exclusive instruction, to read the value of a memory location and request exclusive access to that location.
- A store-exclusive instruction, to attempt to write to the same memory location and return a status bit to a register. If this status bit is clear, it indicates that the thread or process gained exclusive access to the memory and the write succeeds; if this status bit is set, it indicates that the thread or process did not gain exclusive access to the memory and no write was performed.

The pairs of load-exclusive and store-exclusive instructions are:

- The word instructions LDREX and STREX
- The halfword instructions LDREXH and STREXH
- The byte instructions LDREXB and STREXB

Software must use a load-exclusive instruction with the corresponding store-exclusive instruction. To perform an exclusive read-modify-write of a memory location, software must:

1. Use a load-exclusive instruction to read the value of the location.
2. Modify the value, as required.
3. Use a store-exclusive instruction to attempt to write the new value back to the memory location.
4. Test the returned status bit. If the status bit is clear, the read-modify-write completed successfully. If the status bit is set, no write was performed, which indicates that the value returned at Step 1 might be out of date. The software must retry the entire read-modify-write sequence.

Software can use the synchronization primitives to implement a semaphore as follows:

1. Use a load-exclusive instruction to read from the semaphore address, to check whether the semaphore is free.
2. If the semaphore is free, use a store-exclusive to write the claim value to the semaphore address.
3. If the returned status bit from Step 2 indicates that the store-exclusive succeeded, then the software has claimed the semaphore. However, if the store-exclusive failed, another process might have claimed the semaphore after the software performed Step 1.

The Cortex-M4 includes an exclusive access monitor that tags the fact that the processor has executed a load-exclusive instruction. The processor removes its exclusive access tag if:

- It executes a CLREX instruction.
- It executes a store-exclusive instruction, regardless of whether the write succeeds.
- An exception occurs, which means the processor can resolve semaphore conflicts between different threads.

For more information about the synchronization primitive instructions, see the Cortex-M4 instruction set chapter in the ARM Cortex-M4 Devices Generic User Guide (ARM DUI 0553A).

2.2.4 Exception Model

The ARM Cortex-M4 application processor in the CC32xx and the nested vectored interrupt controller (NVIC) prioritize and handle all exceptions in handler mode. The processor state is automatically stored to the stack on an exception, and automatically restored from the stack at the end of the interrupt service routine (ISR). The vector is fetched in parallel to the state saving, enabling efficient interrupt entry. The processor supports tail-chaining, which enables back-to-back interrupts to be performed without the overhead of state saving and restoration.

Copyright © 2017, Texas Instruments Incorporated

Table 2-6 lists all exception types. Software can set eight priority levels on seven of these exceptions (system handlers) as well as on 70 interrupts (listed in Table 2-6). Priorities on the system handlers are set with the NVIC System Handler Priority n (SYSPRIn) registers. Interrupts are enabled through the NVIC Interrupt Set Enable n (ENn) register and prioritized with the NVIC Interrupt Priority n (PRIn) registers. Priorities can be grouped by splitting priority levels into preemption priorities and subpriorities. All the interrupt registers are described in Section 3.2.2.

Internally, the highest user-programmable priority (0) is treated as fourth priority, after a reset, non-maskable interrupt (NMI), and a hard fault, in that order. Note that 0 is the default priority for all the programmable priorities.

NOTE: After a write to clear an interrupt source, it may take several processor cycles for the NVIC to see the interrupt source de-assert. Thus, if the interrupt clear is done as the last action in an interrupt handler, it is possible for the interrupt handler to complete while the NVIC sees the interrupt as still asserted, causing the interrupt handler to be re-entered errantly. This situation can be avoided by either clearing the interrupt source at the beginning of the interrupt handler or by performing a read or write after the write to clear the interrupt source (and flush the write buffer).

See nested vectored interrupt controller (NVIC) for more information on exceptions and interrupts.

2.2.4.1 Exception States

Each exception is in one of the following states:

- Inactive: The exception is not active and not pending.
- Pending: The exception is waiting to be serviced by the processor. An interrupt request from a peripheral or from software can change the state of the corresponding interrupt to pending.
- Active: An exception being serviced by the processor but has not completed. An exception handler can interrupt the execution of another exception handler. In this case, both exceptions are in the active state.
- Active and Pending: The exception is being serviced by the processor, and there is a pending exception from the same source.

2.2.4.2 Exception Types

The exception types are:

- Reset: Reset is invoked on power up or a warm reset. The exception model treats reset as a special form of exception. When reset is asserted, the operation of the processor stops, potentially at any point in an instruction. When reset is deasserted, execution restarts from the address provided by the reset entry in the vector table. Execution restarts as privileged execution in thread mode.
- NMI: A non-maskable interrupt (NMI) can be signaled using the NMI signal, or triggered by software using the Interrupt Control and State (INTCTRL) register. This exception has the highest priority other than reset. NMI is permanently enabled and has a fixed priority of –2. NMIs cannot be masked or prevented from activation by any other exception or preempted by any exception other than reset. NMI in the CC32xx is reserved for the internal system, and is not available for application usage.
- Hard Fault: A hard fault is an exception that occurs because of an error during exception processing, or because an exception cannot be managed by any other exception mechanism. Hard faults have a fixed priority of –1, meaning they have higher priority than any exception with configurable priority.
- Memory Management Fault: A memory management fault is an exception that occurs because of a memory-protection-related fault, including access violation and no match. The MPU or the fixed-memory protection constraints determine this fault, for both instruction and data memory transactions. This fault is used to abort instruction accesses to Execute Never (XN) memory regions, even if the MPU is disabled.
- Bus Fault: A bus fault is an exception that occurs because of a memory-related fault for an instruction or data memory transaction such as a prefetch fault or a memory access fault. This fault can be enabled or disabled.

Copyright © 2017, Texas Instruments Incorporated

- Usage Fault: A usage fault is an exception that occurs because of a fault related to instruction execution, such as:
  - An undefined instruction
  - An illegal unaligned access
  - Invalid state on instruction execution
  - An error on exception return. An unaligned address on a word or halfword memory access or division by zero can cause a usage fault when the core is properly configured.
- SVCall: A supervisor call (SVC) is an exception that is triggered by the SVC instruction. In an OS environment, applications can use SVC instructions to access OS kernel functions and device drivers.
- Debug Monitor: This exception is caused by the debug monitor (when not halting). This exception is only active when enabled. This exception does not activate if it is a lower priority than the current activation.
- PendSV: PendSV is a pendable, interrupt-driven request for system-level service. In an OS environment, use PendSV for context switching when no other exception is active. PendSV is triggered using the Interrupt Control and State (INTCTRL) register.
- SysTick: A SysTick exception is an exception that the system timer generates when it reaches zero when enabled to generate an interrupt. Software can also generate a SysTick exception using the Interrupt Control and State (INTCTRL) register. In an OS environment, the processor can use this exception as system tick.
- Interrupt (IRQ): An interrupt, or IRQ, is an exception signaled by a peripheral or generated by a software request and fed through the NVIC (prioritized). All interrupts are asynchronous to instruction execution. In the system, peripherals use interrupts to communicate with the processor. Table 2-5 lists the interrupts on the CC32xx application processor

For an asynchronous exception, other than reset, the processor can execute another instruction between when the exception is triggered and when the processor enters the exception handler.

Privileged software can disable the exceptions that Table 2-6 show as having configurable priority (see the SYSHNDCTRL register and the DIS0 register).

For more information about hard faults, memory management faults, bus faults, and usage faults, see *Section 2.2.5*.

Table 2-6. Exception Types

Exception Type	Vector Number	Priority [1]	Vector Address or Offset [2]	Activation
-	0	-	0x0000.0000	Stack top is loaded from the first entry of the vector table on reset.
Reset	1	-3 (highest)	0x0000.0004	Asynchronous
Non-Maskable Interrupt (NMI)	2	-2	0x0000.0008	Asynchronous
Hard Fault	3	-1	0x0000.000C	-
Memory Management	4	programmable [3]	0x0000.0010	Synchronous
Bus Fault	5	programmable [3]	0x0000.0014	Synchronous when precise and asynchronous when imprecise
Usage Fault	6	programmable [3]	0x0000.0018	Synchronous
-	10-Jul	-	-	Reserved
SVCall	11	programmable [3]	0x0000.002C	Synchronous
Debug Monitor	12	programmable [3]	0x0000.0030	Synchronous
-	13	-	-	Reserved

(1) a. 0 is the default priority for all the programmable priorities.
(2) b. See Figure 2-5.
(3) See SYSPRI1 on .

Copyright © 2017, Texas Instruments Incorporated

Table 2-6. Exception Types (continued)

Exception Type	Vector Number	Priority [1]	Vector Address or Offset [2]	Activation
PendSV	14	programmable [3]	0x0000.0038	Asynchronous
SysTick	15	programmable [3]	0x0000.003C	Asynchronous
Interrupts	16 and above	programmable [4]	0x0000.0040 and above	Asynchronous

[4] d. See PRIn registers.

Table 2-7. CC32xx Application Processor Interrupts

Interrupt Number (Bit in Interrupt Registers)	Vector Adderess or Offset	Description	Type
0	0x0000.0040	GPIO Port 0 (GPIO 0-7)	
1	0x0000.0044	GPIO Port A1 (GPIO 8-15)	
2	0x0000.0048	GPIO Port A2 (GPIO 16-23)	
3	0x0000.004C	GPIO Port A3 (GPIO 24-31)	
5	0x0000.0054	UART0	
6	0x0000.0058	UART1	
8	0x0000.0060	I2C	
14	0x0000.0078	ADC Channel-0	
15	0x0000.007C	ADC Channel-1	
16	0x0000.0080	ADC Channel-2	
17	0x0000.0084	ADC Channel-3	
18	0x0000.0088	WDT	
19	0x0000.008C	16/32-Bit Timer A0A	
20	0x0000.0090	16/32-Bit Timer A0B	
21	0x0000.0094	16/32-Bit Timer A1A	
22	0x0000.0098	16/32-Bit Timer A1B	
23	0x0000.009C	16/32-Bit Timer A2A	
24	0x0000.00A0	16/32-Bit Timer A2B	
35	0x0000.00CC	16/32-Bit Timer A3A	
36	0x0000.00D0	16/32-Bit Timer A3B	
46	0x0000.00F8	uDMA Software Intr	
47	0x0000.00FC	uDMA Error Intr	
161	0x0000.02C4	I2S	
163	0x0000.02CC	Camera	
168	0x0000.02E0	RAM WR Error	
171	0x0000.02EC	Network Intr	
176	0x0000.0300	SPI	

2.2.4.3 Exception Handlers

The processor handles exceptions using:

- Interrupt service routines (ISRs): Interrupts (IRQx) are the exceptions handled by ISRs.
- Fault handlers: Hard fault, memory-management fault, usage fault, and bus fault are fault exceptions handled by the fault handlers.
- System handlers: NMI, PendSV, SVCall, SysTick, and the fault exceptions are all system exceptions handled by system handlers.

Copyright © 2017, Texas Instruments Incorporated

2.2.4.4 Vector Table

The vector table contains the reset value of the stack pointer and the start addresses, also called exception vectors, for all exception handlers. The vector table is constructed using the vector address or offset shown in Table 2-6. Figure 2-5 shows the order of the exception vectors in the vector table. The least-significant bit of each vector must be 1, indicating that the exception handler is thumb code.

Figure 2-5. Vector Table

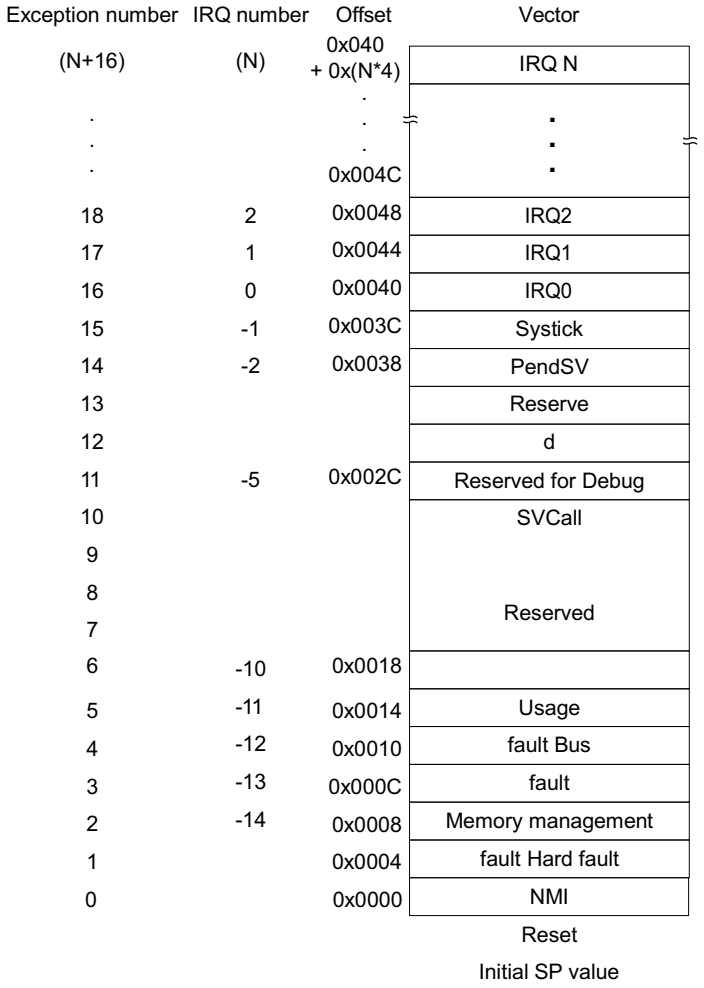

On system reset, the vector table is fixed at address 0x0000 0000. Privileged software can write to the Vector Table Offset (VTABLE) register to relocate the vector table start address to a different memory location, in the range 0x0000 0400 to 0x3FFF FC00. When configuring the VTABLE register, the offset must be aligned on a 1024-byte boundary.

2.2.4.5 Exception Priorities

As shown in Table 2-6, all exceptions have an associated priority, with a lower priority value indicating a higher priority and configurable priorities for all exceptions except reset, hard fault, and NMI. If software does not configure any priorities, then all exceptions with a configurable priority have a priority of 0.

NOTE: Configurable priority values for the CC32xx implementation are in the range 0-7. This means that the reset, hard fault, and NMI exceptions (NMI is reserved for use by the system) with fixed negative priority values always have higher priority than any other exception.

Copyright © 2017, Texas Instruments Incorporated

For example, assigning a higher priority value to IRQ[0] and a lower priority value to IRQ[1] means that IRQ[1] has higher priority than IRQ[0]. If both IRQ[1] and IRQ[0] are asserted, IRQ[1] is processed before IRQ[0].

If multiple pending exceptions have the same priority, the pending exception with the lowest exception number takes precedence. For example, if both IRQ[0] and IRQ[1] are pending and have the same priority, then IRQ[0] is processed before IRQ[1].

When the processor is executing an exception handler, the exception handler is preempted if a higher priority exception occurs. If an exception occurs with the same priority as the exception being handled, the handler is not preempted, irrespective of the exception number. However, the status of the new interrupt changes to pending.

2.2.4.6 Interrupt Priority Grouping

To increase priority control in systems with interrupts, the NVIC supports priority grouping. This grouping divides each interrupt priority register entry into two fields:

- An upper field that defines the group priority
- A lower field that defines a subpriority within the group

Only the group priority determines preemption of interrupt exceptions. When the processor is executing an interrupt exception handler, another interrupt with the same group priority as the interrupt being handled does not preempt the handler.

If multiple pending interrupts have the same group priority, the subpriority field determines the order in which they are processed. If multiple pending interrupts have the same group priority and subpriority, the interrupt with the lowest IRQ number is processed first.

2.2.4.7 Exception Entry and Return

Descriptions of exception handling use the following terms:

- Preemption: When the processor is executing an exception handler, an exception can preempt the exception handler if its priority is higher than the priority of the exception being handled. See Section 2.2.4.6 for more information about preemption by an interrupt. When one exception preempts another, the exceptions are called nested exceptions.
- Return: Return occurs when the exception handler is completed, there is no pending exception with sufficient priority to be serviced, and the completed exception handler was not handling a late-arriving exception. The processor pops the stack and restores the processor state to the state it had before the interrupt occurred.
- Tail-chaining: This mechanism speeds up exception servicing. On completion of an exception handler, if there is a pending exception that meets the requirements for exception entry, the stack pop is skipped and control transfers to the new exception handler.
- Late-arriving: This mechanism speeds up preemption. If a higher priority exception occurs during state saving for a previous exception, the processor switches to handle the higher priority exception and initiates the vector fetch for that exception. State-saving is not affected by late arrival because the state saved is the same for both exceptions. Therefore, the state-saving continues uninterrupted. The processor can accept a late-arriving exception until the first instruction of the exception handler of the original exception enters the execute stage of the processor. On return from the exception handler of the late-arriving exception, the normal tail-chaining rules apply.

2.2.4.7.1 Exception Entry

Exception entry occurs when there is a pending exception with sufficient priority and either the processor is in thread mode or the new exception is of higher priority than the exception being handled, in which case the new exception preempts the original exception. When one exception preempts another, the exceptions are nested.

Copyright © 2017, Texas Instruments Incorporated

Sufficient priority means the exception has more priority than any limits set by the mask registers (see PRIMASK FAULTMASK, and BASEPRI registers). An exception with less priority than this is pending but is not handled by the processor. When the processor takes an exception, unless the exception is a tail-chained or a late-arriving exception, the processor pushes information onto the current stack. This operation is referred to as stacking, and the structure of eight data words is referred to as stack frame.

Figure 2-6 shows the Cortex-M4 stack frame layout, which is similar to that of ARMv7-M implementations without an FPU.

Figure 2-6. Exception Stack Frame

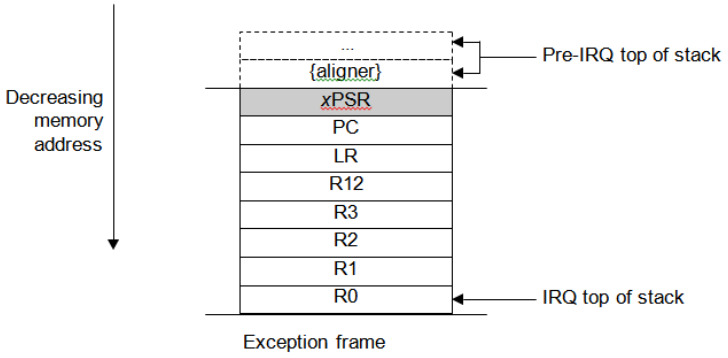

Immediately after stacking, the stack pointer indicates the lowest address in the stack frame.

The stack frame includes the return address, which is the address of the next instruction in the interrupted program. This value is restored to the PC at exception return so that the interrupted program resumes.

In parallel with the stacking operation, the processor performs a vector fetch that reads the exception handler start address from the vector table. When stacking is complete, the processor starts executing the exception handler. At the same time, the processor writes an EXC_RETURN value to the LR, indicating which stack pointer corresponds to the stack frame and what operation mode the processor was in before the entry occurred.

If no higher-priority exception occurs during exception entry, the processor starts executing the exception handler and automatically changes the status of the corresponding pending interrupt to active.

If another higher-priority exception occurs during exception entry, known as late arrival, the processor starts executing the exception handler for this exception and does not change the pending status of the earlier exception

2.2.5 Fault Handling

Faults are a subset of the exceptions (see Section 2.2.4). The following conditions generate a fault:

- A bus error on an instruction fetch, vector table load, or a data access.
- An internally detected error, such as an undefined instruction or an attempt to change state with a BX instruction.
- Attempting to execute an instruction from a memory region marked as non-executable (XN).

2.2.5.1 Fault Types

Table 2-8 shows the types of fault, the handler used for the fault, the corresponding fault status register, and the register bit that indicates the fault has occurred.

Copyright © 2017, Texas Instruments Incorporated

Table 2-8. Faults

Fault	Handler	Fault Status Register	Bit Name
Bus error on a vector read	Hard fault	Hard Fault Status (HFAULTSTAT)	VECT
Fault escalated to a hard fault	Hard fault	Hard Fault Status (HFAULTSTAT)	FORCED
Default memory mismatch on instruction access	Memory management fault	Memory Management Fault Status (MFAULTSTAT)	IERR (1)
Default memory mismatch on data access	Memory management fault	Memory Management Fault Status (MFAULTSTAT)	DERR
Default memory mismatch on exception stacking	Memory management fault	Memory Management Fault Status (MFAULTSTAT)	MSTKE
Default memory mismatch on exception unstacking	Memory management fault	Memory Management Fault Status (MFAULTSTAT)	MUSTKE
Bus error during exception stacking	Bus fault	Bus Fault Status (BFAULTSTAT)	BSTKE
Bus error during exception unstacking	Bus fault	Bus Fault Status (BFAULTSTAT)	BUSTKE
Bus error during instruction prefetch	Bus fault	Bus Fault Status (BFAULTSTAT)	IBUS
Precise data bus error	Bus fault	Bus Fault Status (BFAULTSTAT)	PRECISE
Imprecise data bus error	Bus fault	Bus Fault Status (BFAULTSTAT)	IMPRE
Attempt to access a coprocessor	Usage fault	Usage Fault Status (UFAULTSTAT)	NOCP
Undefined instruction	Usage fault	Usage Fault Status (UFAULTSTAT)	UNDEF
Attempt to enter an invalid instruction set state (2)	Usage fault	Usage Fault Status (UFAULTSTAT)	INVSTAT
Invalid EXC_RETURN value	Usage fault	Usage Fault Status (UFAULTSTAT)	INVPC
Illegal unaligned load or store	Usage fault	Usage Fault Status (UFAULTSTAT)	UNALIGN
Divide by 0	Usage fault	Usage Fault Status (UFAULTSTAT)	DIV0

(1) Occurs on an access to an XN region.

(2) Attempting to use an instruction set other than the Thumb instruction set, or returning to a non load-store-multiple instruction with ICI continuation

2.2.5.2 Fault Escalation and Hard Faults

All fault exceptions except for hard fault have configurable exception priority (see SYSPRI1 in). Software can disable execution of the handlers for these faults (see SYSHNDCTRL).

Usually the exception priority, together with the values of the exception mask registers, determines whether the processor enters the fault handler, and whether a fault handler can preempt another fault handler as described in Section 2.2.4.

In some situations, a fault with configurable priority is treated as a hard fault. This process is called priority escalation, and the fault is described as escalated to hard fault. Escalation to hard fault occurs when:

- A fault handler causes the same kind of fault as the one it is servicing. This escalation to hard fault occurs because a fault handler cannot preempt itself, as it must have the same priority as the current priority level.
- A fault handler causes a fault with the same or lower priority as the fault it is servicing. This situation happens because the handler for the new fault cannot preempt the currently executing fault handler.
- An exception handler causes a fault for which the priority is the same as or lower than the currently executing exception.
- A fault occurs and the handler for that fault is not enabled.

Copyright © 2017, Texas Instruments Incorporated

If a bus fault occurs during a stack push when entering a bus fault handler, the bus fault does not escalate to a hard fault. Thus, if a corrupted stack causes a fault, the fault handler executes even though the stack push for the handler failed. The fault handler operates but the stack contents are corrupted.

NOTE: Only reset and NMI can preempt the fixed-priority hard fault. A hard fault can preempt any exception other than reset, NMI, or another hard fault.

2.2.5.3 Fault Status Registers and Fault Address Registers

The fault status registers indicate the cause of a fault. For bus faults and memory management faults, the fault address register indicates the address accessed by the operation that caused the fault, as shown in Table 2-9.

Table 2-9. Fault Status and Fault Address Registers

Handler	Status Register Name	Address Register Name	Register Description
Hard fault	Hard Fault Status (HFAULTSTAT)	-	
Memory management fault	Memory Management Fault Status (MFAULTSTAT)	Memory Management Fault Address (MMADDR)	
Bus fault	Bus Fault Status (BFAULTSTAT)	Bus Fault Address (FAULTADDR)	
Usage fault	Usage Fault Status (UFAULTSTAT)	-	

2.2.5.4 Lockup

The processor enters a lockup state if a hard fault occurs when executing the NMI or hard fault handlers. When the processor is in the lockup state, it does not execute any instructions. The processor remains in lockup state until it is reset, an NMI occurs, or it is halted by a debugger.

2.2.6 Power Management

The CC32xx Wi-Fi microcontroller is a multi-processor system-on-chip. An advanced power management scheme has been implemented at chip level that delivers the best-in-class energy efficiency across a wide class of application profiles, while handling the asynchronous sleep-wake requirements of multiple high performance processors and Wi-Fi radio subsystems. The Cortex-M4 application processor subsystem (consisting of the CM4 core and application peripherals) is a subset of this.

The chip-level power management scheme is such that the application program is unaware of the power state transitions of the other subsystems. This approach insulates the user from the complexities of a multi-processor system and simplifies the application development process.

From the Cortex-M4 application processor standpoint, CC32xx supports the typical SLEEP and DEEPSLEEP modes similar to those in discrete microcontrollers. The following section describe these two modes.

In addition to SLEEP and DEEPSLEEP, two additional sleep modes are offered. These two modes consume much lower power than the DEEPSLEEP mode in CC32xx.

- Low Power Deep Sleep Mode (LPDS)
  - Recommended for ultra-low power always-connected cloud and Wi-Fi applications
  - Up to 256Kbyte of SRAM retention and fast wakeup (<5 mS)
  - When networking and Wi-Fi subsystems are disabled, the MCU draws less than 100 µA with 256Kbyte of SRAM retained (code and data). Total system current (incl Wi-Fi and network periodic wake-up) as low as 700 µA
  - Processor and peripheral registers are not retained. Global always ON configurations at SoC level are retained.

Copyright © 2017, Texas Instruments Incorporated

- Hibernate Mode (HIB)
  - Recommended for ultra-low power in-frequently connected cloud and Wi-Fi applications
  - Ultra low current of 4 µA, including RTC
  - Wake on RTC or selected GPIO
  - No SRAM or logic retention. 2 × 32 bit register retention.

LPDS and HIB modes will be covered in more detail in the *Power Clock and Reset Management* chapter.

Figure 2-7 shows the architecture of the CC32xx SoC level power management, especially from the application point of view.

Figure 2-7. Power Management Architecture in CC32xx SoC

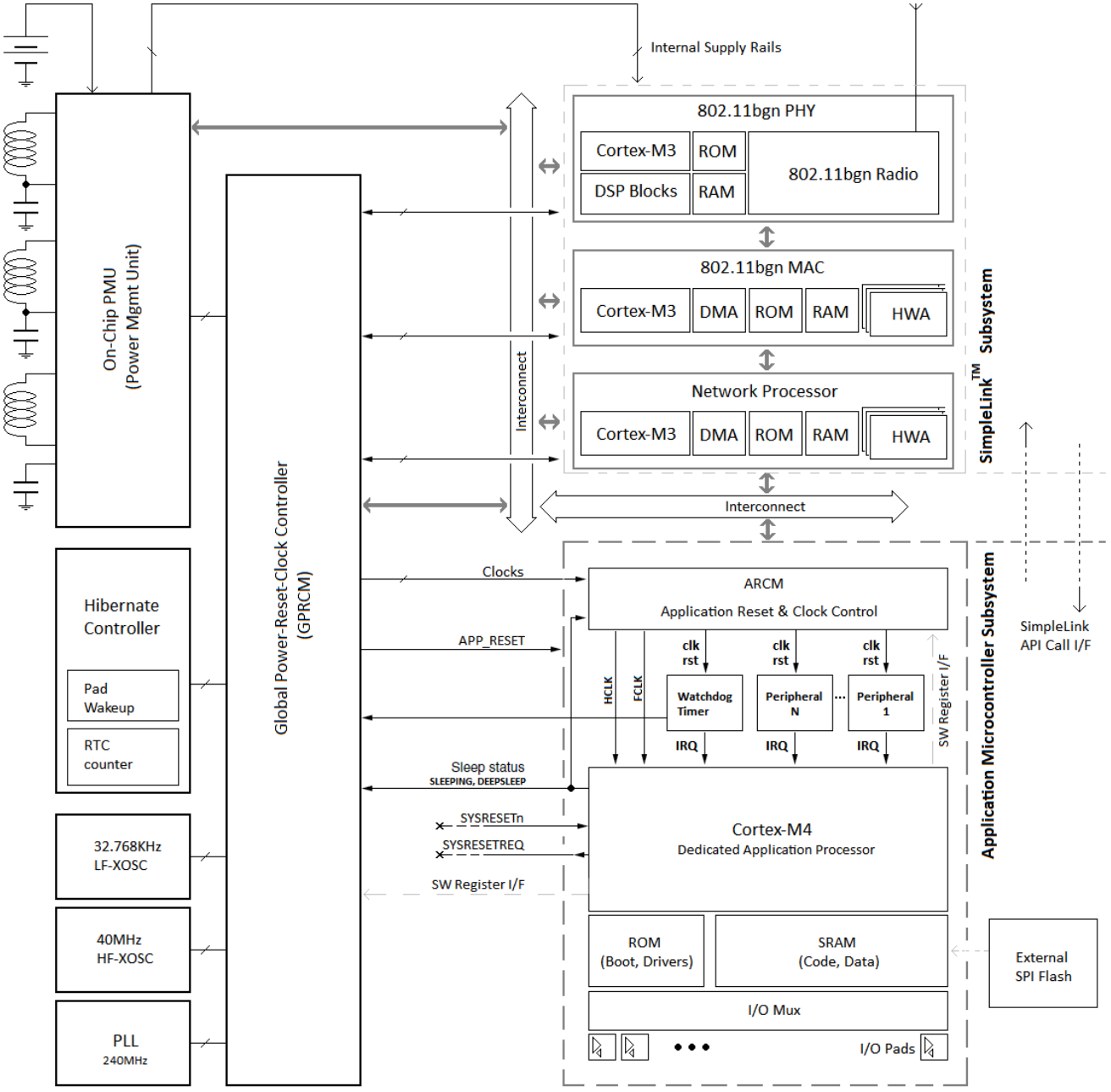

Copyright © 2017, Texas Instruments Incorporated

The Cortex-M4 processor implementation inside the CC32xx multiprocessor SoC has a few differences when compared to a discrete MCU. While typical SLEEP and DEEPSLEEP modes are supported, in the CC32xx these two modes are limited in energy consumption savings.

Ultra-low power applications should be architected such that time spent in LPDS or hibernate mode is maximized. The Cortex-M4 application processor can be configured wake up on selected events, for example network events such as an incoming data packet, timer, or I/O pad toggle. The time spent in RUN (or ACTIVE) state should then be minimized. The dedicated Cortex-M4 application processor in CC32xx is particularly suited for this mode of operation due to its advanced power management, DMA, zero wait state multi-layer AHB interconnect, fast execution and retention over the entire range of zero-wait state SRAM.

- SLEEP: Sleep mode stops the processor clock (clock gating).
- DEEPSLEEP: Deep-sleep mode stops the application process system clock and switches off the PLL.

2.2.7 Instruction Set Summary

The processor implements a version of the Thumb instruction set. Table 2-10 lists the supported instructions.

Note: In this table:

- Angle brackets, < >, enclose alternative forms of the operand
- Braces, {} enclose optional operands
- The Operands column is not exhaustive
- Op2 is a flexible second operand that can be either a register or a constant
- Most instructions can use an optional condition code suffix

  For more information on the instructions and operands, see the instruction descriptions in the *ARM® Cortex™-M4 Technical Reference Manual*.

Table 2-10. Cortex-M4 Instruction Summary

Mnemonic	Operands	Brief Description	Flags
ADC, ADCS	{Rd,} Rn, Op2	Add with carry	N,Z,C,V
ADD, ADDS	{Rd,} Rn, Op2	Add	N,Z,C,V
ADD, ADDW	{Rd,} Rn , #imm12	Add	-
ADR	Rd, label	Load PC-relative address	-
AND, ANDS	{Rd,} Rn, Op2	Logical AND	N,Z,C
ASR, ASRS	Rd, Rm, <Rs|#n>	Arithmetic shift right	N,Z,C
B	label	Branch	-
BFC	Rd, #lsb, #width	Bit field clear	-
BFI	Rd, Rn, #lsb, #width	Bit field insert	-
BIC, BICS	{Rd,} Rn, Op2	Bit clear	N,Z,C
BKPT	#imm	Breakpoint	-
BL	label	Branch with link	-
BLX	Rm	Branch indirect with link	-
BX	Rm	Branch indirect	-
CBNZ	Rn, label	Compare and branch if non-zero	-
CBZ	Rn, label	Compare and branch if zero	-
CLREX	-	Clear exclusive	-
CLZ	Rd, Rm	Count leading zeros	-
CMN	Rn, Op2	Compare negative	N,Z,C,V
CMP	Rn, Op2	Compare	N,Z,C,V
CPSID	i	Change processor state, disable interrupts	-

Copyright © 2017, Texas Instruments Incorporated

Table 2-10. Cortex-M4 Instruction Summary (continued)

CPSIE	i	Change processor state, enable interrupts	-
DMB	-	Data memory barrier	-
DSB	-	Data synchronization barrier	-
EOR, EORS	{Rd,} Rn, Op2	Exclusive OR	N,Z,C
ISB	-	Instruction synchronization barrier	-
IT	-	If-Then condition block	-
LDM	Rn{!}, reglist	Load multiple registers, increment after	-
LDMDB, LDMEA	Rn{!}, reglist	Load multiple registers, decrement before	-
LDMFD, LDMIA	Rn{!}, reglist	Load multiple registers, increment after	-
LDR	Rt, [Rn, #offset]	Load register with word	-
LDRB, LDRBT	Rt, [Rn, #offset]	Load register with byte	-
LDRD	Rt, Rt2, [Rn, #offset]	Load register with two bytes	-
LDREX	Rt, [Rn, #offset]	Load register exclusive	-
LDREXB	Rt, [Rn]	Load register exclusive with byte	-
LDREXH	Rt, [Rn]	Load register exclusive with halfword	-
LDRH, LDRHT	Rt, [Rn, #offset]	Load register with halfword	-
LDRSB, LDRSBT	Rt, [Rn, #offset]	Load register with signed byte	-
LDRSH, LDRSHT	Rt, [Rn, #offset]	Load register with signed halfword	-
LDRT	Rt, [Rn, #offset]	Load register with word	-
LSL, LSLS	Rd, Rm, <Rs|#n>	Logical shift left	N,Z,C
LSR, LSRS	Rd, Rm, <Rs|#n>	Logical shift right	N,Z,C
MLA	Rd, Rn, Rm, Ra	Multiply with accumulate, 32-bit result	-
MLS	Rd, Rn, Rm, Ra	Multiply and subtract, 32-bit result	-
MOV, MOVS	Rd, Op2	Move	N,Z,C
MOV, MOVW	Rd, #imm16	Move 16-bit constant	N,Z,C
MOVT	Rd, #imm16	Move top	-
MRS	Rd, spec_reg	Move from special register to general register	-
MSR	spec_reg, Rm	Move from general register to special register	N,Z,C,V
MUL, MULS	{Rd,} Rn, Rm	Multiply, 32-bit result	N,Z
MVN, MVNS	Rd, Op2	Move NOT	N,Z,C
NOP	-	No operation	-
ORN, ORNS	{Rd,} Rn, Op2	Logical OR NOT	N,Z,C
ORR, ORRS	{Rd,} Rn, Op2	Logical OR	N,Z,C
PKHTB, PKHBT	{Rd,} Rn, Rm, Op2	Pack halfword	-
POP	reglist	Pop registers from stack	-
PUSH	reglist	Push registers onto stack	-
QADD	{Rd,} Rn, Rm	Saturating add	Q
QADD16	{Rd,} Rn, Rm	Saturating add 16	-
QADD8	{Rd,} Rn, Rm	Saturating add 8	-

Copyright © 2017, Texas Instruments Incorporated

Table 2-10. Cortex-M4 Instruction Summary (continued)

QASX	{Rd,} Rn, Rm	Saturating add and subtract with exchange	-
QDADD	{Rd,} Rn, Rm	Saturating double and add	Q
QDSUB	{Rd,} Rn, Rm	Saturating double and subtract	Q
QSAX	{Rd,} Rn, Rm	Saturating subtract and add with exchange	-
QSUB	{Rd,} Rn, Rm	Saturating subtract	Q
QSUB16	{Rd,} Rn, Rm	Saturating subtract 16	-
QSUB8	{Rd,} Rn, Rm	Saturating subtract 8	-
RBIT	Rd, Rn	Reverse bits	-
REV	Rd, Rn	Reverse byte order in a word	-
REV16	Rd, Rn	Reverse byte order in each halfword	-
REVSH	Rd, Rn	Reverse byte order in bottom halfword and sign extend	-
ROR, RORS	Rd, Rm, <Rs|#n>	Rotate right	N,Z,C
RRX, RRXS	Rd, Rm	Rotate right with extend	N,Z,C
RSB, RSBS	{Rd,} Rn, Op2	Reverse subtract	N,Z,C,V
SADD16	{Rd,} Rn, Rm	Signed add 16	GE
SADD8	{Rd,} Rn, Rm	Signed add 8	GE
SASX	{Rd,} Rn, Rm	Signed add and subtract with exchange	GE
SBC, SBCS	{Rd,} Rn, Op2	Subtract with carry	N,Z,C,V
SBFX	Rd, Rn, #lsb, #width	Signed bit field extract	-
SDIV	{Rd,} Rn, Rm	Signed divide	-
SEL	{Rd,} Rn, Rm	Select bytes	-
SEV	-	Send event	-
SHADD16	{Rd,} Rn, Rm	Signed halving add 16	-
SHADD8	{Rd,} Rn, Rm	Signed halving add 8	-
SHASX	{Rd,} Rn, Rm	Signed halving add and subtract with exchange	-
SHSAX	{Rd,} Rn, Rm	Signed halving add and subtract with exchange	-
SHSUB16	{Rd,} Rn, Rm	Signed halving subtract 16	-
SHSUB8	{Rd,} Rn, Rm	Signed halving subtract 8	-
SMLABB, SMLABT, SMLATB, SMLATT	Rd, Rn, Rm, Ra	Signed multiply accumulate long (halfwords)	Q
SMLAD, SMLADX	Rd, Rn, Rm, Ra	Signed multiply accumulate dual	Q
SMLAL	RdLo, RdHi, Rn, Rm	Signed multiply with accumulate (32x32+64), 64-bit result	-
SMLALBB, SMLALBT, SMLALTB, SMLALTT	RdLo, RdHi, Rn, Rm	Signed multiply accumulate long (halfwords)	-
SMLALD, SMLALDX	RdLo, RdHi, Rn, Rm	Signed multiply accumulate long dual	-
SMLAWB,SMLAWT	Rd, Rn, Rm, Ra	Signed multiply accumulate, word by halfword	Q
SMLSD SMLSDX	Rd, Rn, Rm, Ra	Signed multiply subtract dual	Q
SMLSLD SMLSLDX	RdLo, RdHi, Rn, Rm	Signed multiply subtract long dual	
SMMLA	Rd, Rn, Rm, Ra	Signed most significant word multiply accumulate	-

Copyright © 2017, Texas Instruments Incorporated

Table 2-10. Cortex-M4 Instruction Summary (continued)

SMMLS, SMMLR	Rd, Rn, Rm, Ra	Signed most significant word multiply subtract	-
SMMUL, SMMULR	{Rd,} Rn, Rm	Signed most significant word multiply	-
SMUAD SMUADX	{Rd,} Rn, Rm	Signed dual multiply add	Q
SMULBB, SMULBT, SMULTB, SMULTT	{Rd,} Rn, Rm	Signed multiply halfwords	-
SMULL	RdLo, RdHi, Rn, Rm	Signed multiply (32x32), 64-bit result	-
SMULWB, SMULWT	{Rd,} Rn, Rm	Signed multiply by halfword	-
SMUSD, SMUSDX	{Rd,} Rn, Rm	Signed dual multiply subtract	-
SSAT	Rd, #n, Rm {,shift #s}	Signed saturate	Q
SSAT16	Rd, #n, Rm	Signed saturate 16	Q
SSAX	{Rd,} Rn, Rm	Saturating subtract and add with exchange	GE
SSUB16	{Rd,} Rn, Rm	Signed subtract 16	-
SSUB8	{Rd,} Rn, Rm	Signed subtract 8	-
STM	Rn{!}, reglist	Store multiple registers, increment after	-
Mnemonic	Operands	Brief Description	Flags
STMDB, STMEA	Rn{!}, reglist	Store multiple registers, decrement before	-
STMFD, STMIA	Rn{!}, reglist	Store multiple registers, increment after	-
STR	Rt, [Rn {, #offset}]	Store register word	-
STRB, STRBT	Rt, [Rn {, #offset}]	Store register byte	-
STRD	Rt, Rt2, [Rn {, #offset}]	Store register two words	-
STREX	Rt, Rt, [Rn {, #offset}]	Store register exclusive	-
STREXB	Rd, Rt, [Rn]	Store register exclusive byte	-
STREXH	Rd, Rt, [Rn]	Store register exclusive halfword	-
STRH, STRHT	Rt, [Rn {, #offset}]	Store register halfword	-
STRSB, STRSBT	Rt, [Rn {, #offset}]	Store register signed byte	-
STRSH, STRSHT	Rt, [Rn {, #offset}]	Store register signed halfword	-
STRT	Rt, [Rn {, #offset}]	Store register word	-
SUB, SUBS	{Rd,} Rn, Op2	Subtract	N,Z,C,V
SUB, SUBW	{Rd,} Rn, #imm12	Subtract 12-bit constant	N,Z,C,V
SVC	#imm	Supervisor call	-
SXTAB	{Rd,} Rn, Rm, {,ROR #}	Extend 8 bits to 32 and add	-
SXTAB16	{Rd,} Rn, Rm,{,ROR #}	Dual extend 8 bits to 16 and add	-
SXTAH	{Rd,} Rn, Rm,{,ROR #}	Extend 16 bits to 32 and add	-
SXTB16	{Rd,} Rm {,ROR #n}	Signed extend byte 16	-
SXTB	{Rd,} Rm {,ROR #n}	Sign extend a byte	-
SXTH	{Rd,} Rm {,ROR #n}	Sign extend a halfword	-
TBB	[Rn, Rm]	Table branch byte	-
TBH	[Rn, Rm, LSL #1]	Table branch halfword	-
TEQ	Rn, Op2	Test equivalence	N,Z,C
TST	Rn, Op2	Test	N,Z,C
UADD16	{Rd,} Rn, Rm	Unsigned add 16	GE
UADD8	{Rd,} Rn, Rm	Unsigned add 8	GE

Copyright © 2017, Texas Instruments Incorporated

Table 2-10. Cortex-M4 Instruction Summary (continued)

UASX	{Rd,} Rn, Rm	Unsigned add and subtract with exchange	GE
UHADD16	{Rd,} Rn, Rm	Unsigned halving add 16	-
UHADD8	{Rd,} Rn, Rm	Unsigned halving add 8	-
UHASX	{Rd,} Rn, Rm	Unsigned halving add and subtract with exchange	-
UHSAX	{Rd,} Rn, Rm	Unsigned halving subtract and add with exchange	-
UHSUB16	{Rd,} Rn, Rm	Unsigned halving subtract 16	-
UHSUB8	{Rd,} Rn, Rm	Unsigned halving subtract 8	-
UBFX	Rd, Rn, #lsb, #width	Unsigned bit field extract	-
UDIV	{Rd,} Rn, Rm	Unsigned divide	-
UMAAL	RdLo, RdHi, Rn, Rm	Unsigned multiply accumulate accumulate long (32x32+64), 64-bit result	-
UMLAL	RdLo, RdHi, Rn, Rm	Unsigned multiply with accumulate (32x32+32+32), 64-bit result	-
UMULL	RdLo, RdHi, Rn, Rm	Unsigned multiply (32x 2), 64-bit result	-
UQADD16	{Rd,} Rn, Rm	Unsigned Saturating Add 16	-
UQADD8	{Rd,} Rn, Rm	Unsigned Saturating Add 8	-
UQASX	{Rd,} Rn, Rm	Unsigned Saturating Add and Subtract with Exchange	-
UQSAX	{Rd,} Rn, Rm	Unsigned Saturating Subtract and Add with Exchange	-
UQSUB16	{Rd,} Rn, Rm	Unsigned Saturating Subtract 16	-
UQSUB8	{Rd,} Rn, Rm	Unsigned Saturating Subtract 8	-
USAD8	{Rd,} Rn, Rm	Unsigned Sum of Absolute Differences	-
USADA8	{Rd,} Rn, Rm, Ra	Unsigned Sum of Absolute Differences and Accumulate	-
USAT	Rd, #n, Rm {,shift #s}	Unsigned Saturate	Q
USAT16	Rd, #n, Rm	Unsigned Saturate 16	Q
USAX	{Rd,} Rn, Rm	Unsigned Subtract and add with Exchange	GE
USUB16	{Rd,} Rn, Rm	Unsigned Subtract 16	GE
USUB8	{Rd,} Rn, Rm	Unsigned Subtract 8	GE
UXTAB	{Rd,} Rn, Rm, {,ROR #}	Rotate, extend 8 bits to 32 and Add	-
UXTAB16	{Rd,} Rn, Rm, {,ROR #}	Rotate, dual extend 8 bits to 16 and Add	-
UXTAH	{Rd,} Rn, Rm, {,ROR #}	Rotate, unsigned extend and Add Halfword	-
UXTB	{Rd,} Rm, {,ROR #n}	Zero extend a Byte	-
UXTB16	{Rd,} Rm, {,ROR #n}	Unsigned Extend Byte 16	-
UXTH	{Rd,} Rm, {,ROR #n}	Zero extend a Halfword	-
WFE	-	Wait for event	-
WFI	-	Wait for interrupt	-

Copyright © 2017, Texas Instruments Incorporated

Cortex-M4 Peripherals

Topic **Page**

3.1 Overview **73**
3.2 Functional Description **73**
3.3 Register Map **76**

Copyright © 2017, Texas Instruments Incorporated

3.1 Overview

This chapter provides information on the CC32xx implementation of the Cortex-M4 application processor in CC32xx peripherals, including:

- SysTick (see Section 3.2.1) – Provides a simple, 24-bit clear-on-write, decrementing, wrap-on-zero counter with a flexible control mechanism.
- Nested Vectored Interrupt Controller (NVIC) (see Section 3.2.2) – Facilitates low-latency exception and interrupt handling, controls power management, and implements system control registers.
- System Control Block (SCB) (see Section 3.2.3) – Provides system implementation information and system control, including configuration, control, and reporting of system exceptions.

Table 3-1 shows the address map of the private peripheral bus (PPB). Some peripheral register regions are split into two address regions, as indicated by two addresses listed.

Table 3-1. Core Peripheral Register Regions

Address	Core Peripheral
0xE000.E010-0xE000.E01F	System timer
0xE000.E100-0xE000.E4EF	Nested vectored interrupt controller
0xE000.EF00-0xE000.EF03	
0xE000.E008-0xE000.E00F 0xE000.ED00-0xE000.ED3F	System control block

3.2 Functional Description

This chapter provides information on the CC32xx implementation of the Cortex-M4 application processor in CC32xx peripherals: SysTick, NVIC, and SCB.

3.2.1 System Timer (SysTick)

SysTick is an integrated system timer which provides a simple, 24-bit clear-on-write, decrementing, wrap-on-zero counter with a flexible control mechanism. The counter can be used in several different ways:

- An RTOS tick timer that fires at a programmable rate (for example, 100 Hz) and invokes a SysTick routine.
- A high-speed alarm timer using the system clock.
- A variable rate alarm or signal timer – The duration is range-dependent on the reference clock used and the dynamic range of the counter.
- A simple counter measuring time to completion and time used.
- An internal clock source control based on missing or meeting durations. The COUNT bit in the STCTRL control and status register can be used to determine if an action completed within a set duration, as part of a dynamic clock management control loop.

When enabled, the timer counts down on each clock from the reload value to zero, reloads (wraps) to the value in the STRELOAD register on the next clock edge, then decrements on subsequent clocks. Clearing the STRELOAD register disables the counter on the next wrap. When the counter reaches zero, the COUNT status bit is set. The COUNT bit clears on reads.

Writing to the STCURRENT register clears the register and the COUNT status bit. The write does not trigger the SysTick exception logic. On a read, the current value is the value of the register at the time the register is accessed.

The SysTick counter runs on the system clock. If this clock signal is stopped for low power mode, the SysTick counter stops. Ensure software uses aligned word accesses to access the SysTick registers.

Copyright © 2017, Texas Instruments Incorporated

The SysTick counter reload and current value are undefined at reset; the correct initialization sequence for the SysTick counter is:

1. Program the value in the STRELOAD register.
2. Clear the STCURRENT register by writing to it with any value.
3. Configure the STCTRL register for the required operation.

NOTE: When the processor is halted for debugging, the counter does not decrement.

3.2.2 Nested Vectored Interrupt Controller (NVIC)

This section describes the nested vectored interrupt controller (NVIC) and the registers it uses. The NVIC supports:

- A programmable priority level of 0-7 for each interrupt. A higher level corresponds to a lower priority, so level 0 is the highest interrupt priority.
- Low-latency exception and interrupt handling
- Level and pulse detection of interrupt signals
- Dynamic reprioritization of interrupts
- Grouping of priority values into group priority and subpriority fields
- Interrupt tail-chaining
- An external non-maskable interrupt (NMI)

The processor automatically stacks its state on exception entry and unstacks this state on exception exit, with no instruction overhead, providing low latency exception handling.

3.2.2.1 Level-Sensitive and Pulse Interrupts

The processor supports both level-sensitive and pulse interrupts. Pulse interrupts are also described as edge-triggered interrupts.

A level-sensitive interrupt is held asserted until the peripheral deasserts the interrupt signal. Typically this happens because the ISR accesses the peripheral, causing it to clear the interrupt request. A pulse interrupt is an interrupt signal sampled synchronously on the rising edge of the processor clock. To ensure the NVIC detects the interrupt, the peripheral must assert the interrupt signal for at least one clock cycle, during which the NVIC detects the pulse and latches the interrupt.

When the processor enters the ISR, it automatically removes the pending state from the interrupt (see Section 3.2.2.2 for more information). For a level-sensitive interrupt, if the signal is not deasserted before the processor returns from the ISR, the interrupt becomes pending again, and the processor must execute its ISR again. As a result, the peripheral can hold the interrupt signal asserted until it no longer needs servicing.

3.2.2.2 Hardware and Software Control of Interrupts

The Cortex-M4 latches all interrupts. A peripheral interrupt becomes pending for one of the following reasons:

- The NVIC detects that the interrupt signal is High and the interrupt is not active.
- The NVIC detects a rising edge on the interrupt signal.
- Software writes to the corresponding interrupt set-pending register bit, or to the Software Trigger Interrupt (SWTRIG) register to make a software-generated interrupt pending. See the INT bit in the PEND0 register or SWTRIG register.

A pending interrupt remains pending until one of the following:

- The processor enters the ISR for the interrupt, changing the state of the interrupt from pending to active. Then:
  - For a level-sensitive interrupt, when the processor returns from the ISR, the NVIC samples the interrupt signal. If the signal is asserted, the state of the interrupt changes to pending, which might

Copyright © 2017, Texas Instruments Incorporated

cause the processor to immediately re-enter the ISR. Otherwise, the state of the interrupt changes to inactive.

  - For a pulse interrupt, the NVIC continues to monitor the interrupt signal, and if this is pulsed, the state of the interrupt changes to pending and active. In this case, when the processor returns from the ISR the state of the interrupt changes to pending, which might cause the processor to immediately re-enter the ISR.
    If the interrupt signal is not pulsed while the processor is in the ISR, when the processor returns from the ISR the state of the interrupt changes to inactive.

- Software writes to the corresponding interrupt clear-pending register bit
  - For a level-sensitive interrupt, if the interrupt signal is still asserted, the state of the interrupt does not change. Otherwise, the state of the interrupt changes to inactive.
  - For a pulse interrupt, the state of the interrupt changes to inactive, if the state was pending or to active, if the state was active and pending.

3.2.3 System Control Block (SCB)

The system control block (SCB) provides system implementation information and system control, including configuration, control, and reporting of the system exceptions.

Copyright © 2017, Texas Instruments Incorporated

3.3 Register Map

Table 3-2 lists the Cortex-M4 Peripheral SysTick, NVIC, and SCB registers. The offset listed is a hexadecimal increment to the address of the register, relative to the core peripherals base address of 0xE000 E000.

NOTE: Register spaces that are not used are reserved for future or internal use. Software should not modify any reserved memory address.

Table 3-2. Peripherals Register Map

Offset	Name	Type	Reset	Description
System Timer (SysTick) Registers				
0x010	STCTRL	R/W	0x0000.0000	SysTick Control and Status Register
0x014	STRELOAD	R/W	-	SysTick Reload Value Register
0x018	STCURRENT	R/WC	-	SysTick Current Value Register
Nested Vectored Interrupt Controller (NVIC) Registers				
0x100	EN0	R/W	0x0000.0000	Interrupt 0-31 Set Enable
0x104	EN1	R/W	0x0000.0000	Interrupt 32-63 Set Enable
0x108	EN2	R/W	0x0000.0000	Interrupt 64-95 Set Enable
0x10C	EN3	R/W	0x0000.0000	Interrupt 96-127 Set Enable
0x110	EN4	R/W	0x0000.0000	Interrupt 128-159 Set Enable
0x114	EN5	R/W	0x0000.0000	Interrupt 160- 191 Set Enable
0x118	EN6	R/W	0x0000.0000	Interrupt 192- 199 Set Enable
0x180	DIS0	R/W	0x0000.0000	Interrupt 0-31 Clear Enable
0x184	DIS1	R/W	0x0000.0000	Interrupt 32-63 Clear Enable
0x188	DIS2	R/W	0x0000.0000	Interrupt 64-95 Clear Enable
0x18C	DIS3	R/W	0x0000.0000	Interrupt 96-127 Clear Enable
0x190	DIS4	R/W	0x0000.0000	Interrupt 128-159 Clear Enable
0x194	DIS5	R/W	0x0000.0000	Interrupt 160-191 Clear Enable
0x198	DIS6	R/W	0x0000.0000	Interrupt 192 - 199 Clear Enable
0x200	PEND0	R/W	0x0000.0000	Interrupt 0-31 Set Pending
0x204	PEND1	R/W	0x0000.0000	Interrupt 32-63 Set Pending
0x208	PEND2	R/W	0x0000.0000	Interrupt 64-95 Set Pending
0x20C	PEND3	R/W	0x0000.0000	Interrupt 96-127 Set Pending
0x210	PEND4	R/W	0x0000.0000	Interrupt 128-159 Set Pending
0x214	PEND5	R/W	0x0000.0000	Interrupt 160-191 Set Pending
0x218	PEND6	R/W	0x0000.0000	Interrupt 192-199 Set Pending
0x280	UNPEND0	R/W	0x0000.0000	Interrupt 0-31 Clear Pending
0x284	UNPEND1	R/W	0x0000.0000	Interrupt 32-63 Clear Pending
0x288	UNPEND2	R/W	0x0000.0000	Interrupt 64-95 Clear Pending
0x28C	UNPEND3	R/W	0x0000.0000	Interrupt 96-127 Clear Pending
0x290	UNPEND4	R/W	0x0000.0000	Interrupt 128-159 Clear Pending
0x294	UNPEND5	R/W	0x0000.0000	Interrupt 160-191 Clear Pending
0x298	UNPEND6	R/W	0x0000.0000	Interrupt 192- 199 Clear Pending
0x300	ACTIVE0	RO	0x0000.0000	Interrupt 0-31 Active Bit
0x304	ACTIVE1	RO	0x0000.0000	Interrupt 32-63 Active Bit
0x308	ACTIVE2	RO	0x0000.0000	Interrupt 64-95 Active Bit
0x30C	ACTIVE3	RO	0x0000.0000	Interrupt 96-127 Active Bit
0x310	ACTIVE4	RO	0x0000.0000	Interrupt 128-159 Active Bit
0x314	ACTIVE5	RO	0x0000.0000	Interrupt 160-191 Active Bit

Copyright © 2017, Texas Instruments Incorporated

Table 3-2. Peripherals Register Map (continued)

Offset	Name	Type	Reset	Description
0x318	ACTIVE6	RO	0x0000.0000	Interrupt 192-199 Active Bit
0x400	PRI0	R/W	0x0000.0000	Interrupt 0-3 Priority
0x404	PRI1	R/W	0x0000.0000	Interrupt 4-7 Priority
0x408	PRI2	R/W	0x0000.0000	Interrupt 8-11 Priority
0x40C	PRI3	R/W	0x0000.0000	Interrupt 12-15 Priority
0x410	PRI4	R/W	0x0000.0000	Interrupt 16-19 Priority
0x414	PRI5	R/W	0x0000.0000	Interrupt 20-23 Priority
0x418	PRI6	R/W	0x0000.0000	Interrupt 24-27 Priority
0x41C	PRI7	R/W	0x0000.0000	Interrupt 28-31 Priority
0x420	PRI8	R/W	0x0000.0000	Interrupt 32-35 Priority
0x424	PRI9	R/W	0x0000.0000	Interrupt 36-39 Priority
0x428	PRI10	R/W	0x0000.0000	Interrupt 40-43 Priority
0x42C	PRI11	R/W	0x0000.0000	Interrupt 44-47 Priority
0x430	PRI12	R/W	0x0000.0000	Interrupt 48-51 Priority
0x434	PRI13	R/W	0x0000.0000	Interrupt 52-55 Priority
0x438	PRI14	R/W	0x0000.0000	Interrupt 56-59 Priority
0x43C	PRI15	R/W	0x0000.0000	Interrupt 60-63 Priority
0x440	PRI16	R/W	0x0000.0000	Interrupt 64-67 Priority
0x444	PRI17	R/W	0x0000.0000	Interrupt 68-71 Priority
0x448	PRI18	R/W	0x0000.0000	Interrupt 72-75 Priority
0x44C	PRI19	R/W	0x0000.0000	Interrupt 76-79 Priority
0x450	PRI20	R/W	0x0000.0000	Interrupt 80-83 Priority
0x454	PRI21	R/W	0x0000.0000	Interrupt 84-87 Priority
0x458	PRI22	R/W	0x0000.0000	Interrupt 88-91 Priority
0x45C	PRI23	R/W	0x0000.0000	Interrupt 92-95 Priority
0x460	PRI24	R/W	0x0000.0000	Interrupt 96-99 Priority
0x464	PRI25	R/W	0x0000.0000	Interrupt 100-103 Priority
0x468	PRI26	R/W	0x0000.0000	Interrupt 104-107 Priority
0x46C	PRI27	R/W	0x0000.0000	Interrupt 108-111 Priority
0x470	PRI28	R/W	0x0000.0000	Interrupt 112-115 Priority
0x474	PRI29	R/W	0x0000.0000	Interrupt 116-119 Priority
0x478	PRI30	R/W	0x0000.0000	Interrupt 120-123 Priority
0x47C	PRI31	R/W	0x0000.0000	Interrupt 124-127 Priority
0x480	PRI32	R/W	0x0000.0000	Interrupt 128-131 Priority
0x484	PRI33	R/W	0x0000.0000	Interrupt 132-135 Priority
0x488	PRI34	R/W	0x0000.0000	Interrupt 136-139 Priority
0x48C	PRI35	R/W	0x0000.0000	Interrupt 140-143 Priority
0x490	PRI36	R/W	0x0000.0000	Interrupt 144-147 Priority
0x494	PRI37	R/W	0x0000.0000	Interrupt 148-151 Priority
0x498	PRI38	R/W	0x0000.0000	Interrupt 152-155 Priority
0x49C	PRI39	R/W	0x0000.0000	Interrupt 156-159 Priority
0x4A0	PRI40	R/W	0x0000.0000	Interrupt 160-163 Priority
0x4A4	PRI41	R/W	0x0000.0000	Interrupt 164-167 Priority
0x4A8	PRI42	R/W	0x0000.0000	Interrupt 168-171 Priority
0x4AC	PRI43	R/W	0x0000.0000	Interrupt 172-175 Priority
0x4B0	PRI44	R/W	0x0000.0000	Interrupt 176-179 Priority
0x4B4	PRI45	R/W	0x0000.0000	Interrupt 180-183 Priority

Copyright © 2017, Texas Instruments Incorporated

Table 3-2. Peripherals Register Map (continued)

Offset	Name	Type	Reset	Description
0x4B8	PRI46	R/W	0x0000.0000	Interrupt 184-187 Priority
0x4BC	PRI47	R/W	0x0000.0000	Interrupt 188-191 Priority
0x4C0	PRI48	R/W	0x0000.0000	Interrupt 192-195 Priority
0x4C4	PRI49	R/W	0x0000.0000	Interrupt 196-199 Priority
0xF00	SWTRIG	WO	0x0000.0000	Software Trigger Interrupt
System Control Block (SCB) Registers				
0x008	ACTLR	R/W	0x0000.0000	Auxiliary Control
0xD00	CPUID	RO	0x410F.C241	CPU ID Base
0xD04	INTCTRL	R/W	0x0000.0000	Interrupt Control and State
0xD08	VTABLE	R/W	0x0000.0000	Vector Table Offset
0xD0C	APINT	R/W	0xFA05.0000	Application Interrupt and Reset Control
0xD10	SYSCTRL	R/W	0x0000.0000	System Control
0xD14	CFGCTRL	R/W	0x0000.0200	Configuration and Control
0xD18	SYSPRI1	R/W	0x0000.0000	System Handler Priority 1
0xD1C	SYSPRI2	R/W	0x0000.0000	System Handler Priority 2
0xD20	SYSPRI3	R/W	0x0000.0000	System Handler Priority 3
0xD24	SYSHNDCTRL	R/W	0x0000.0000	System Handler Control and State
0xD28	FAULTSTAT	R/W1C	0x0000.0000	Configurable Fault Status
0xD2C	HFAULTSTAT	R/W1C	0x0000.0000	Hard Fault Status
0xD34	MMADDR	R/W	-	Memory Management Fault Address
0xD38	FAULTADDR	R/W	-	Bus Fault Address

Copyright © 2017, Texas Instruments Incorporated

3.3.1 Cortex Registers

Table 3-3 lists the memory-mapped Cortex registers. All register offset addresses not listed in Table 3-3 should be considered as reserved locations and the register contents should not be modified.

The offset listed is a hexadecimal increment to the register's address, relative to the Core Peripherals base address of 0xE000.E000.

NOTE: Register spaces that are not used are reserved for future or internal use. Software should not modify any reserved memory address.

Table 3-3. Cortex Registers

Offset	Acronym	Register Name	Section
8h	ACTLR	Auxiliary Control	Section 3.3.1.1
10h	STCTRL	SysTick Control and Status Register	Section 3.3.1.2
14h	STRELOAD	SysTick Reload Value Register	Section 3.3.1.3
18h	STCURRENT	SysTick Current Value Register	Section 3.3.1.4
100h to 118h	EN_0 to EN_6	Interrupt Set Enable	Section 3.3.1.5
180h to 198h	DIS_0 to DIS_6	Interrupt Clear Enable	Section 3.3.1.6
200h to 218h	PEND_0 to PEND_6	Interrupt Set Pending	Section 3.3.1.7
280h to 298h	UNPEND_0 to UNPEND_6	Interrupt Clear Pending	Section 3.3.1.8
300h to 318h	ACTIVE_0 to ACTIVE_6	Interrupt Active Bit	Section 3.3.1.9
400h to 4C4h	PRI_0 to PRI_49	Interrupt Priority	Section 3.3.1.10
D00h	CPUID	CPU ID Base	Section 3.3.1.11
D04h	INTCTRL	Interrupt Control and State	Section 3.3.1.12
D08h	VTABLE	Vector Table Offset	Section 3.3.1.13
D0Ch	APINT	Application Interrupt and Reset Control	Section 3.3.1.14
D10h	SYSCTRL	System Control	Section 3.3.1.15
D14h	CFGCTRL	Configuration Control	Section 3.3.1.16
D18h	SYSPRI1	System Handler Priority 1	Section 3.3.1.17
D1Ch	SYSPRI2	System Handler Priority 2	Section 3.3.1.18
D20h	SYSPRI3	System Handler Priority 3	Section 3.3.1.19
D24h	SYSHNDCTRL	System Handler Control and State	Section 3.3.1.20
D28h	FAULTSTAT	Configurable Fault Status	Section 3.3.1.21
D2Ch	HFAULTSTAT	Hard Fault Status	Section 3.3.1.22
D38h	FAULTDDR	Bus Fault Address	Section 3.3.1.23
F00h	SWTRIG	Software Trigger Interrupt	Section 3.3.1.24

Copyright © 2017, Texas Instruments Incorporated

3.3.1.1 ACTLR Register (Offset = 8h) [reset = 0h]

ACTLR is shown in Figure 3-1 and described in Table 3-4.

Return to Summary Table.

The ACTLR register provides disable bits for IT folding, write buffer use for accesses to the default memory map, and interruption of multi-cycle instructions. By default, this register is set to provide optimum performance from the Cortex-M4 application processor in the CC32xx, and does not normally require modification.

NOTE: This register can only be accessed from privileged mode.

Figure 3-1. ACTLR Register

31	30	29	28	27	26	25	24
RESERVED							
R-0h							
23	22	21	20	19	18	17	16
RESERVED							
R-0h							
15	14	13	12	11	10	9	8
RESERVED						DISOOFP	DISFPCA
R-0h						R/W-0h	R/W-0h
7	6	5	4	3	2	1	0
RESERVED					DISFOLD	DISWBUF	DISMCYC
R-0h					R/W-0h	R/W-0h	R/W-0h

LEGEND: R/W = Read/Write; R = Read only; W1toCl = Write 1 to clear bit; *-n* = value after reset

Table 3-4. ACTLR Register Field Descriptions

Bit	Field	Type	Reset	Description
31-10	RESERVED	R	0h	
9	DISOOFP	R/W	0h	Disable out-of-order floating point N/A for the CC32xx.
8	DISFPCA	R/W	0h	
7-3	RESERVED	R	0h	
2	DISFOLD	R/W	0h	Disable IT Folding In some situations, the processor can start executing the first instruction in an IT block while it is still executing the IT instruction. This behavior is called IT folding, and improves performance, However, IT folding can cause jitter in looping. If a task must avoid jitter, set the DISFOLD bit before executing the task, to disable IT folding. 0h = No effect. 1h = Disables IT folding.
1	DISWBUF	R/W	0h	Disable IT Folding In some situations, the processor can start executing the first instruction in an IT block while it is still executing the IT instruction. This behavior is called IT folding, and improves performance. However, IT folding can cause jitter in looping. If a task must avoid jitter, set the DISFOLD bit before executing the task, to disable IT folding. 0h = No effect. 1h = Disables IT folding.

Copyright © 2017, Texas Instruments Incorporated

Table 3-4. ACTLR Register Field Descriptions (continued)

Bit	Field	Type	Reset	Description
0	DISMCYC	R/W	0h	Disable Interrupts of Multiple Cycle Instructions In this situation, the interrupt latency of the processor is increased because any LDM or STM must complete before the processor can stack the current state and enter the interrupt handler. 0h = No effect. 1h = Disables interruption of load multiple and store multiple instructions.

Copyright © 2017, Texas Instruments Incorporated

3.3.1.2 STCTRL Register (Offset = 10h) [reset = 0h]

STCTRL is shown in Figure 3-2 and described in Table 3-5.

Return to Summary Table.

The SysTick (STCTRL) register enables the SysTick features.

NOTE: This register can only be accessed from privileged mode.

Figure 3-2. STCTRL Register

31	30	29	28	27	26	25	24
RESERVED							
R-0h							
23	22	21	20	19	18	17	16
RESERVED							COUNT
R-0h							R-0h
15	14	13	12	11	10	9	8
RESERVED							
R-0h							
7	6	5	4	3	2	1	0
RESERVED					CLK_SRC	INTEN	ENABLE
R-0h					R/W-0h	R/W-0h	R/W-0h

LEGEND: R/W = Read/Write; R = Read only; W1toCl = Write 1 to clear bit; *-n* = value after reset

Table 3-5. STCTRL Register Field Descriptions

Bit	Field	Type	Reset	Description
31-17	RESERVED	R	0h	
16	COUNT	R	0h	Count Flag This bit is cleared by a read of the register or if the STCURRENT register is written with any value. If read by the debugger using the DAP, this bit is cleared only if the MasterType bit in the AHB-AP Control Register is clear. Otherwise, the COUNT bit is not changed by the debugger read. See the ARM Debug Interface V5 Architecture Specification for more information on MasterType. 0h = The SysTick timer has not counted to 0 since the last time this bit was read. 1h = The SysTick timer has counted to 0 since the last time this bit was read.
15-3	RESERVED	R	0h	
2	CLK_SRC	R/W	0h	Clock Source 0h = Precision internal oscillator (PIOSC) divided by 4 1h = System clock
1	INTEN	R/W	0h	Interrupt Enable 0h = Interrupt generation is disabled. Software can use the COUNT bit to determine if the counter has ever reached 0. 1h = An interrupt is generated to the NVIC when SysTick counts to 0.
0	ENABLE	R/W	0h	Enable 0h = The counter is disabled. 1h = Enables SysTick to operate in a multi-shot way. That is, the counter loads the RELOAD value and begins counting down. On reaching 0, the COUNT bit is set and an interrupt is generated if enabled by INTEN. The counter then loads the RELOAD value again and begins counting.

Copyright © 2017, Texas Instruments Incorporated

3.3.1.3 STRELOAD Register (Offset = 14h) [reset = 0h]

STRELOAD is shown in Figure 3-3 and described in Table 3-6.

Return to Summary Table.

The STRELOAD register specifies the start value to load into the SysTick Current Value (STCURRENT) register when the counter reaches 0. The start value can be between 0x1 and 0x00FF.FFFF. A start value of 0 is possible, but has no effect because the SysTick interrupt and the COUNT bit are activated when counting from 1 to 0. SysTick can be configured as a multi-shot timer, repeated over and over, firing every N+1 clock pulses, where N is any value from 1 to 0x00FF.FFFF. For example, if a tick interrupt is required every 100 clock pulses, 99 must be written into the RELOAD field. To access this register correctly, the system clock must be faster than 8 MHz.

NOTE: This register can only be accessed from privileged mode.

Figure 3-3. STRELOAD Register

31	30	29	28	27	26	25	24	23	22	21	20	19	18	17	16	15	14	13	12	11	10	9	8	7	6	5	4	3	2	1	0
RESERVED								RELOAD																							
R-0h								R/W-0h																							

LEGEND: R/W = Read/Write; R = Read only; W1toCl = Write 1 to clear bit; *-n* = value after reset

Table 3-6. STRELOAD Register Field Descriptions

Bit	Field	Type	Reset	Description
31-24	RESERVED	R	0h	
23-0	RELOAD	R/W	0h	Reload Value Value to load into the SysTick Current Value (STCURRENT) register when the counter reaches 0.

Copyright © 2017, Texas Instruments Incorporated

3.3.1.4 STCURRENT Register (Offset = 18h) [reset = 0h]

STCURRENT is shown in Figure 3-4 and described in Table 3-7.

Return to Summary Table.

The STCURRENT register contains the current value of the SysTick counter.

NOTE: This register can only be accessed from privileged mode.

Figure 3-4. STCURRENT Register

31	30	29	28	27	26	25	24	23	22	21	20	19	18	17	16	15	14	13	12	11	10	9	8	7	6	5	4	3	2	1	0
RESERVED								CURRENT																							
R-0h								R/WC-0h																							

LEGEND: R/W = Read/Write; R = Read only; W1toCl = Write 1 to clear bit; *-n* = value after reset

Table 3-7. STCURRENT Register Field Descriptions

Bit	Field	Type	Reset	Description
31-24	RESERVED	R	0h	
23-0	CURRENT	R/WC	0h	Current Value This field contains the current value at the time the register is accessed. No read-modify-write protection is provided, so change with care. This register is write-clear. Writing to it with any value clears the register. Clearing this register also clears the COUNT bit of the STCTRL register.

Copyright © 2017, Texas Instruments Incorporated

3.3.1.5 EN_0 to EN_6 Register (offset = 100h to 118h) [reset = 0h]

EN_0 to EN_6 is shown in Figure 3-5 and described in Table 3-8.

The ENn registers enable interrupts and show which interrupts are enabled. Bit 0 of EN0 corresponds to Interrupt 0; bit 31 corresponds to Interrupt 31. Bit 0 of EN1 corresponds to Interrupt 32; bit 31 corresponds to Interrupt 63. Bit 0 of EN2 corresponds to Interrupt 64; bit 31 corresponds to Interrupt 95. Bit 0 of EN3 corresponds to Interrupt 96; bit 31 corresponds to Interrupt 127. Bit 0 of EN4 corresponds to Interrupt 128; bit 31 corresponds to Interrupt 159. Bit 0 of EN5 corresponds to Interrupt 160; bit 31 corresponds to Interrupt 191. Bit 0 of EN6 corresponds to interrupt 192; bit 7 corresponds to interrupt 199. If a pending interrupt is enabled, the NVIC activates the interrupt based on its priority. If an interrupt is not enabled, asserting its interrupt signal changes the interrupt state to pending, but the NVIC never activates the interrupt, regardless of its priority.

NOTE: This register can only be accessed from privileged mode.

Figure 3-5. EN_0 to EN_6 Register

31	30	29	28	27	26	25	24	23	22	21	20	19	18	17	16	15	14	13	12	11	10	9	8	7	6	5	4	3	2	1	0
INT																															
R/W-0h																															

LEGEND: R/W = Read/Write; R = Read only; W1toCl = Write 1 to clear bit; *-n* = value after reset

Table 3-8. EN_0 to EN_6 Register Field Descriptions

Bit	Field	Type	Reset	Description
31-0	INT	R/W	0h	Interrupt Enable A bit can only be cleared by setting the corresponding INT[n] bit in the DISn register. 0h (W) = On a write, no effect. 0h (R) = On a read, indicates the interrupt is disabled. 1h (W) = On a write, enables the interrupt. 1h (R) = On a read, indicates the interrupt is enabled.

Copyright © 2017, Texas Instruments Incorporated

3.3.1.6 DIS_0 to DIS_6 Register (offset = 180h to 198h) [reset = 0h]

DIS_0 to DIS_6 is shown in Figure 3-6 and described in Table 3-9.

The DISn registers disable interrupts. Bit 0 of DIS0 corresponds to Interrupt 0; bit 31 corresponds to Interrupt 31. Bit 0 of DIS1 corresponds to Interrupt 32; bit 31 corresponds to Interrupt 63. Bit 0 of DIS2 corresponds to Interrupt 64; bit 31 corresponds to Interrupt 95. Bit 0 of DIS3 corresponds to Interrupt 96; bit 31 corresponds to Interrupt 127. Bit 0 of DIS4 corresponds to Interrupt 128; bit 31 corresponds to Interrupt 159. Bit 0 of DIS5 corresponds to Interrupt 160; bit 31 corresponds to Interrupt 191. Bit 0 of DIS6 corresponds to Interrupt 192; bit 7 corresponds to Interrupt 199.

NOTE: This register can only be accessed from privileged mode.

Figure 3-6. DIS_0 to DIS_6 Register

31	30	29	28	27	26	25	24	23	22	21	20	19	18	17	16	15	14	13	12	11	10	9	8	7	6	5	4	3	2	1	0
INT																															
R/W-0h																															

LEGEND: R/W = Read/Write; R = Read only; W1toCl = Write 1 to clear bit; *-n* = value after reset

Table 3-9. DIS_0 to DIS_6 Register Field Descriptions

Bit	Field	Type	Reset	Description
31-0	INT	R/W	0h	Interrupt Disable EN5 (for DIS5) register; EN6 (for DIS6) register 0h (R) = On a read, indicates the interrupt is disabled. 1h (W) = On a write, no effect. 1h (R) = On a read, indicates the interrupt is enabled.

Copyright © 2017, Texas Instruments Incorporated

3.3.1.7 PEND_0 to PEND_6 Register (offset = 200h to 218h) [reset = 0h]

PEND_0 to PEND_6 is shown in Figure 3-7 and described in Table 3-10.

The PENDn registers force interrupts into the pending state and show which interrupts are pending. Bit 0 of PEND0 corresponds to Interrupt 0; bit 31 corresponds to Interrupt 31. Bit 0 of PEND1 corresponds to Interrupt 32; bit 31 corresponds to Interrupt 63. Bit 0 of PEND2 corresponds to Interrupt 64; bit 31 corresponds to Interrupt 95. Bit 0 of PEND3 corresponds to Interrupt 96; bit 31 corresponds to Interrupt 127. Bit 0 of PEND4 corresponds to Interrupt 128; bit 31 corresponds to Interrupt 159. Bit 0 of PEND5 corresponds to Interrupt 160; bit 31 corresponds to Interrupt 191. Bit 0 of PEND6 corresponds to Interrupt 192; bit 7 corresponds to Interrupt 199.

NOTE: This register can only be accessed from privileged mode.

Figure 3-7. PEND_0 to PEND_6 Register

31	30	29	28	27	26	25	24	23	22	21	20	19	18	17	16	15	14	13	12	11	10	9	8	7	6	5	4	3	2	1	0
INT																															
R/W-0h																															

LEGEND: R/W = Read/Write; R = Read only; W1toCl = Write 1 to clear bit; *-n* = value after reset

Table 3-10. PEND_0 to PEND_6 Register Field Descriptions

Bit	Field	Type	Reset	Description
31-0	INT	R/W	0h	Interrupt Set Pending If the corresponding interrupt is already pending, setting a bit has no effect. A bit can only be cleared by setting the corresponding INT[n] bit in the UNPEND0 (for PEND0 to PEND3) register. UNPEND4 (for PEND4) register UNPEND5 (for PEND5) register UNPEND6 (for PEND6) register 0h (W) = On a write, no effect. 0h (R) = On a read, indicates that the interrupt is not pending. 1h (W) = On a write, the corresponding interrupt is set to pending even if it is disabled. 1h (R) = On a read, indicates that the interrupt is pending.

Copyright © 2017, Texas Instruments Incorporated

3.3.1.8 UNPEND_0 to UNPEND_6 Register (offset = 280h to 298h) [reset = 0h]

UNPEND_0 to UNPEND_6 is shown in Figure 3-8 and described in Table 3-11.

The UNPENDn registers show which interrupts are pending and remove the pending state from interrupts. Bit 0 of UNPEND0 corresponds to Interrupt 0; bit 31 corresponds to Interrupt 31. Bit 0 of UNPEND1 corresponds to Interrupt 32; bit 31 corresponds to Interrupt 63. Bit 0 of UNPEND2 corresponds to Interrupt 64; bit 31 corresponds to Interrupt 95. Bit 0 of UNPEND3 corresponds to Interrupt 96; bit 31 corresponds to Interrupt 127. Bit 0 of UNPEND4 corresponds to Interrupt 128; bit 10 corresponds to Interrupt 159. Bit 0 of UNPEND5 corresponds to Interrupt 160; bit 31 corresponds to interrupt 191. Bit 0 of UNPEND6 corresponds to Interrupt 192; bit 7 corresponds to Interrupt 199.

NOTE: This register can only be accessed from privileged mode.

Figure 3-8. UNPEND_0 to UNPEND_6 Register

31	30	29	28	27	26	25	24	23	22	21	20	19	18	17	16	15	14	13	12	11	10	9	8	7	6	5	4	3	2	1	0
INT																															
R/W-0h																															

LEGEND: R/W = Read/Write; R = Read only; W1toCl = Write 1 to clear bit; *-n* = value after reset

Table 3-11. UNPEND_0 to UNPEND_6 Register Field Descriptions

Bit	Field	Type	Reset	Description
31-0	INT	R/W	0h	Interrupt Clear Pending Setting a bit does not affect the active state of the corresponding interrupt. 0h (W) = On a write, no effect. 0h (R) = On a read, indicates that the interrupt is not pending. 1h (W) = On a write, clears the corresponding INT[n] bit in the PEND0 (for UNPEND0 to UNPEND3) register; PEND4 (for UNPEND4) register; PEND5 (for UNPEND5) register; PEND6 (for UNPEND6) register; so that interrupt [n] is no longer pending. 1h (R) = On a read, indicates that the interrupt is pending.

Copyright © 2017, Texas Instruments Incorporated

3.3.1.9 ACTIVE_0 to ACTIVE_6 Register (offset = 300h to 318h) [reset = 0h]

ACTIVE_0 to ACTIVE_6 is shown in Figure 3-9 and described in Table 3-12.

The UNPENDn registers indicate which interrupts are active. Bit 0 of ACTIVE0 corresponds to Interrupt 0; bit 31 corresponds to Interrupt 31. Bit 0 of ACTIVE1 corresponds to Interrupt 32; bit 31 corresponds to Interrupt 63. Bit 0 of ACTIVE2 corresponds to Interrupt 64; bit 31 corresponds to Interrupt 95. Bit 0 of ACTIVE3 corresponds to Interrupt 96; bit 31 corresponds to Interrupt 127. Bit 0 of ACTIVE4 corresponds to Interrupt 128; bit 31 corresponds to Interrupt 159. Bit 0 of ACTIVE5 corresponds to Interrupt 160; bit 31 corresponds to Interrupt 191. Bit 0 of ACTIVE6 corresponds to Interrupt 192; bit 7 corresponds to Interrupt 199.

CAUTION

Do not manually set or clear the bits in this register.

Figure 3-9. ACTIVE_0 to ACTIVE_6 Register

31	30	29	28	27	26	25	24	23	22	21	20	19	18	17	16	15	14	13	12	11	10	9	8	7	6	5	4	3	2	1	0
INT																															
R/W-0h																															

LEGEND: R/W = Read/Write; R = Read only; W1toCl = Write 1 to clear bit; *-n* = value after reset

Table 3-12. ACTIVE_0 to ACTIVE_6 Register Field Descriptions

Bit	Field	Type	Reset	Description
31-0	INT	R	0h	Interrupt Active 0h = The corresponding interrupt is not active. 1h = The corresponding interrupt is active, or active and pending.

Copyright © 2017, Texas Instruments Incorporated

3.3.1.10 PRI_0 to PRI_49 Register (offset = 400h to 4C4h) [reset = 0h]

PRI_0 to PRI_49 is shown in Figure 3-10 and described in Table 3-13.

The PRIn registers provide 3-bit priority fields for each interrupt. These registers are byte accessible. Each register holds four priority fields that are assigned to interrupts as follows: bits 31 to 29 have interrupt [4n+3], bits 23 to 21 have interrupt [4n+2], bits 15 to 13 have interrupt [4n+1], and bits 7 to have interrupt [4n]. Each priority level can be split into separate group priority and subpriority fields. The PRIGROUP field in the Application Interrupt and Reset Control (APINT) register indicates the position of the binary point that splits the priority and subpriority fields.

NOTE: This register can only be accessed from privileged mode.

Figure 3-10. PRI_0 to PRI_49 Register

31	30	29	28	27	26	25	24	23	22	21	20	19	18	17	16
INTD			RESERVED					INTC			RESERVED				
R/W-0h			R-0h					R/W-0h			R-0h				
15	14	13	12	11	10	9	8	7	6	5	4	3	2	1	0
INTB			RESERVED					INTA			RESERVED				
R/W-0h			R-0h					R/W-0h			R-0h				

LEGEND: R/W = Read/Write; R = Read only; W1toCl = Write 1 to clear bit; *-n* = value after reset

Table 3-13. PRI_0 to PRI_49 Register Field Descriptions

Bit	Field	Type	Reset	Description
31-29	INTD	R/W	0h	Interrupt Priority for Interrupt [4n+3] This field holds a priority value, 0-7, for the interrupt with the number [4n+3], where n is the number of the Interrupt Priority register (n=0 for PRI0, and so on). The lower the value, the greater the priority of the corresponding interrupt.
28-24	RESERVED	R	0h	
23-21	INTC	R/W	0h	Interrupt Priority for Interrupt [4n+2] This field holds a priority value, 0-7, for the interrupt with the number [4n+2], where n is the number of the Interrupt Priority register (n=0 for PRI0, and so on). The lower the value, the greater the priority of the corresponding interrupt.
20-16	RESERVED	R	0h	
15-13	INTB	R/W	0h	Interrupt Priority for Interrupt [4n+1] This field holds a priority value, 0-7, for the interrupt with the number [4n+1], where n is the number of the Interrupt Priority register (n=0 for PRI0, and so on). The lower the value, the greater the priority of the corresponding interrupt.
12-8	RESERVED	R	0h	
7-5	INTA	R/W	0h	Interrupt Priority for Interrupt [4n] This field holds a priority value, 0-7, for the interrupt with the number [4n], where n is the number of the Interrupt Priority register (n=0 for PRI0, and so on). The lower the value, the greater the priority of the corresponding interrupt.
4-0	RESERVED	R	0h	

Copyright © 2017, Texas Instruments Incorporated

3.3.1.11 CPUID Register (Offset = D00h) [reset = 410FC241h]

CPUID is shown in Figure 3-11 and described in Table 3-14.

Return to Summary Table.

The CPUID register contains the ARM Cortex-M4 processor part number, version, and implementation information.

NOTE: This register can only be accessed from privileged mode.

Figure 3-11. CPUID Register

31	30	29	28	27	26	25	24	23	22	21	20	19	18	17	16	15	14	13	12	11	10	9	8	7	6	5	4	3	2	1	0
IMP								VAR				CON				PARTNO												REV			
R-41h								R-0h				R-Fh				R-C24h												R-1h			

LEGEND: R/W = Read/Write; R = Read only; W1toCl = Write 1 to clear bit; *-n* = value after reset

Table 3-14. CPUID Register Field Descriptions

Bit	Field	Type	Reset	Description
31-24	IMP	R	41h	Implementer Code 41h = ARM
23-20	VAR	R	0h	Variant Number 0h = The rn value in the rnpn product revision identifier, for example, the 0 in r0p0.
19-16	CON	R	Fh	Constant Value Description 0xF Always reads as 0xF.
15-4	PARTNO	R	C24h	Part Number C24h = Cortex-M4 application processor in CC32xx.
3-0	REV	R	1h	Revision Number 1h = The pn value in the rnpn product revision identifier; for example, the 1 in r0p1.

Copyright © 2017, Texas Instruments Incorporated

3.3.1.12 INTCTRL Register (Offset = D04h) [reset = 0h]

INTCTRL is shown in Figure 3-12 and described in Table 3-15.

Return to Summary Table.

Figure 3-12. INTCTRL Register

31	30	29	28	27	26	25	24
NMISET	RESERVED		PENDSV	UNPENDSV	PENDSTSET	PENDSTCLR	RESERVED
R/W-0h	R-0h		R/W-0h	W-0h	R/W-0h	W-0h	R-0h
23	22	21	20	19	18	17	16
ISRPRE	ISRPEND	RESERVED		VECPEND			
R-0h	R-0h	R-0h		R-0h			
15	14	13	12	11	10	9	8
VECPEND				RETBASE	RESERVED		
R-0h				R-0h	R-0h		
7	6	5	4	3	2	1	0
VECACT							
R-0h							

LEGEND: R/W = Read/Write; R = Read only; W1toCl = Write 1 to clear bit; *-n* = value after reset

Table 3-15. INTCTRL Register Field Descriptions

Bit	Field	Type	Reset	Description
31	NMISET	R/W	0h	NMI Set Pending Because NMI is the highest-priority exception, normally the processor enters the NMI exception handler as soon as it registers the setting of this bit, and clears this bit on entering the interrupt handler. A read of this bit by the NMI exception handler returns 1 only if the NMI signal is reasserted while the processor is executing that handler. 0h (W) = On a write, no effect. 0h (R) = On a read, indicates an NMI exception is not pending. 1h (W) = On a write, changes the NMI exception state to pending. 1h (R) = On a read, indicates an NMI exception is pending.
30-29	RESERVED	R	0h	
28	PENDSV	R/W	0h	PendSV Set Pending Setting this bit is the only way to set the PendSV exception state to pending. This bit is cleared by writing a 1 to the UNPENDSV bit. 0h (W) = On a write, no effect. 0h (R) = On a read, indicates a PendSV exception is not pending. 1h (W) = On a write, changes the PendSV exception state to pending. 1h (R) = On a read, indicates a PendSV exception is pending.
27	UNPENDSV	W	0h	PendSV Clear Pending This bit is write onl on a register read, its value is unknown. 0h = On a write, no effect. 1h = On a write, removes the pending state from the PendSV exception.
26	PENDSTSET	R/W	0h	SysTick Set Pending This bit is cleared by writing a 1 to the PENDSTCLR bit. 0h (W) = On a write, no effect. 0h (R) = On a read, indicates a SysTick exception is not pending. 1h (W) = On a write, changes the SysTick exception state to pending. 1h (R) = On a read, indicates a SysTick exception is pending.

Copyright © 2017, Texas Instruments Incorporated

Table 3-15. INTCTRL Register Field Descriptions (continued)

Bit	Field	Type	Reset	Description
25	PENDSTCLR	W	0h	SysTick Clear Pending This bit is write only on a register read, its value is unknown. 0h = On a write, no effect. 1h = On a write, removes the pending state from the SysTick exception.
24	RESERVED	R	0h	
23	ISRPRE	R	0h	Debug Interrupt Handling This bit is only meaningful in debug mode, and reads as zero when the processor is not in debug mode. 0h = The release from halt does not take an interrupt. 1h = The release from halt takes an interrupt.
22	ISRPEND	R	0h	Interrupt Pending This bit provides status for all interrupts excluding NMI and faults. 0h = No interrupt is pending. 1h = An interrupt is pending.
21-20	RESERVED	R	0h	
19-12	VECPEND	R	0h	Interrupt Pending Vector Number This field contains the exception number of the highest priority pending enabled exception. The value indicated by this field includes the effect of the BASEPRI and FAULTMASK registers, but not any effect of the PRIMASK register. 0h = No exceptions are pending 1h = Reserved 2h = NMI 3h = Hard fault 4h = Memory management fault 5h = Bus fault 6h = Usage fault 7h- Ah = Reserved Bh = SVCall Ch = Reserved for Debug Dh = Reserved Eh = PendSV Fh = SysTick 10h = Interrupt Vector 0 11h = Interrupt Vector 1 ... D9h = Interrupt Vector 199
11	RETBASE	R	0h	Return to Base This bit provides status for all interrupts excluding NMI and faults. This bit only has meaning if the processor is currently executing an ISR (the Interrupt Program Status (IPSR) register is non-zero). 0h = There are preempted active exceptions to execute. 1h = There are no active exceptions, or the currently executing exception is the only active exception.
10-8	RESERVED	R	0h	
7-0	VECACT	R	0h	Interrupt Pending Vector Number This field contains the active exception number. The exception numbers can be found in the description for the VECPEND field. If this field is clear, the processor is in Thread mode. This field contains the same value as the ISRNUM field in the IPSR register. Subtract 16 from this value to obtain the IRQ number required to index into the Interrupt Set Enable (ENn), Interrupt Clear Enable (DISn), Interrupt Set Pending (PENDn), Interrupt Clear Pending (UNPENDn), and Interrupt Priority (PRIn) registers.

Copyright © 2017, Texas Instruments Incorporated

3.3.1.13 VTABLE Register (Offset = D08h) [reset = 0h]

VTABLE is shown in Figure 3-13 and described in Table 3-16.

Return to Summary Table.

The VTABLE register indicates the offset of the vector table base address from memory address 0x0000.0000.

NOTE: This register can only be accessed from privileged mode.

Figure 3-13. VTABLE Register

31	30	29	28	27	26	25	24	23	22	21	20	19	18	17	16	15	14	13	12	11	10	9	8	7	6	5	4	3	2	1	0
OFFSET																						RESERVED									
R/W-0h																						R-0h									

LEGEND: R/W = Read/Write; R = Read only; W1toCl = Write 1 to clear bit; *-n* = value after reset

Table 3-16. VTABLE Register Field Descriptions

Bit	Field	Type	Reset	Description
31-10	OFFSET	R/W	0h	Vector Table Offset When configuring the OFFSET field, the offset must be aligned to the number of exception entries in the vector table. Because there are 199 interrupts, the offset must be aligned on a 1024-byte boundary.
9-0	RESERVED	R	0h	

Copyright © 2017, Texas Instruments Incorporated

3.3.1.14 APINT Register (Offset = D0Ch) [reset = FA050000h]

APINT is shown in Figure 3-14 and described in Table 3-17.

Return to Summary Table.

The APINT register provides priority grouping control for the exception model, endian status for data accesses, and reset control of the system. To write to this register, 0x05FA must be written to the VECTKEY field, otherwise the write is ignored. The PRIGROUP field indicates the position of the binary point that splits the INTx fields in the Interrupt Priority (PRIx) registers into separate group priority and subpriority fields. The bit numbers in the Group Priority Field and Subpriority Field columns in the table refer to the bits in the INTA field. For the INTB field, the corresponding bits are 15:13; for INTC, 23:21; and for INTD, 31:29.

NOTE: This register can only be accessed from privileged mode.

NOTE: Determining preemption of an exception uses only the group priority field.

PRIGROUP Bit Field = Binary Point = Group Priority Field = Subpriority Field = Group Priorities = Subpriorities

0h-4h = bxxx = [7:5] = None = 8 = 1

5h = bxx.y = [7:6] = [5] = 4 = 2

6h = bx.yy = [7] = [6:5] = 2 = 4

7h = b.yyy = None = [7:5] = 1 = 8

INTx field showing the binary point. An x denotes a group priority field bit, and a y denotes a subpriority field bit.

Figure 3-14. APINT Register

31	30	29	28	27	26	25	24
VECTKEY							
R/W-FA05h							
23	22	21	20	19	18	17	16
VECTKEY							
R/W-FA05h							
15	14	13	12	11	10	9	8
ENDIANESS	RESERVED				PRIGROUP		
R-0h	R-0h				R/W-0h		
7	6	5	4	3	2	1	0
RESERVED					SYSRESREQ	VECTCLRACT	VECTRESET
R-0h					W-0h	W-0h	W-0h

LEGEND: R/W = Read/Write; R = Read only; W1toCl = Write 1 to clear bit; *-n* = value after reset

Table 3-17. APINT Register Field Descriptions

Bit	Field	Type	Reset	Description
31-16	VECTKEY	R/W	FA05h	Register Key This field is used to guard against accidental writes to this register. 0x05FA must be written to this field in order to change the bits in this register. On a read, 0xFA05 is returned.
15	ENDIANESS	R	0h	Data Endianess The CC32xx implementation uses only little-endian mode, so this is cleared to 0.
14-11	RESERVED	R	0h	

Copyright © 2017, Texas Instruments Incorporated

Table 3-17. APINT Register Field Descriptions (continued)

Bit	Field	Type	Reset	Description
10-8	PRIGROUP	R/W	0h	Interrupt Priority Grouping This field determines the split of group priority from subpriority
7-3	RESERVED	R	0h	
2	SYSRESREQ	W	0h	System Reset Request This bit is automatically cleared during the reset of the core and reads as 0. 0h = No effect. 1h = Resets the core and all on-chip peripherals except the Debug interface.
1	VECTCLRACT	W	0h	Clear Active NMI / Fault This bit is reserved for debug use and reads as 0. This bit must be written as a 0, otherwise behavior is unpredictable.
0	VECTRESET	W	0h	System Reset This bit is reserved for debug use and reads as 0. This bit must be written as a 0, otherwise behavior is unpredictable.

Copyright © 2017, Texas Instruments Incorporated

3.3.1.15 SYSCTRL Register (Offset = D10h) [reset = 0h]

SYSCTRL is shown in Figure 3-15 and described in Table 3-18.

Return to Summary Table.

The SYSCTRL register controls features of entry to and exit from low-power state.

NOTE: This register can only be accessed from privileged mode.

Figure 3-15. SYSCTRL Register

31	30	29	28	27	26	25	24
RESERVED							
R-0h							
23	22	21	20	19	18	17	16
RESERVED							
R-0h							
15	14	13	12	11	10	9	8
RESERVED							
R-0h							
7	6	5	4	3	2	1	0
RESERVED			SEVONPEND	RESERVED	SLEEPDEEP	SLEEPEXIT	RESERVED
R-0h			R/W-0h	R-0h	R/W-0h	R/W-0h	R-0h

LEGEND: R/W = Read/Write; R = Read only; W1toCl = Write 1 to clear bit; *-n* = value after reset

Table 3-18. SYSCTRL Register Field Descriptions

Bit	Field	Type	Reset	Description
31-5	RESERVED	R	0h	
4	SEVONPEND	R/W	0h	Wake Up on Pending 0h = Only enabled interrupts or events can wake up the processor; disabled interrupts are excluded. 1h = Enabled events and all interrupts, including disabled interrupts, can wake up the processor.
3	RESERVED	R	0h	
2	SLEEPDEEP	R/W	0h	Deep Sleep Enable 0h = Use Sleep mode as the low power mode. 1h = Use Deep-sleep mode as the low power mode.
1	SLEEPEXIT	R/W	0h	Sleep on ISR Exit Setting this bit enables an interrupt-driven application to avoid returning to an empty main application. 0h = When returning from Handler mode to Thread mode, do not sleep when returning to Thread mode. 1h = When returning from Handler mode to Thread mode, enter sleep or deep sleep on return from an ISR.
0	RESERVED	R	0h	

Copyright © 2017, Texas Instruments Incorporated

3.3.1.16 CFGCTRL Register (Offset = D14h) [reset = 200h]

CFGCTRL is shown in Figure 3-16 and described in Table 3-19.

Return to Summary Table.

The CFGCTRL register controls entry to Thread mode and enables:

- The handlers for NMI, hard fault and faults escalated by the FAULTMASK register to ignore bus faults
- Trapping of divide by zero and unaligned accesses
- Access to the SWTRIG register by unprivileged software.

NOTE: This register can only be accessed from privileged mode.

Figure 3-16. CFGCTRL Register

31	30	29	28	27	26	25	24
RESERVED							
R-0h							
23	22	21	20	19	18	17	16
RESERVED							
R-0h							
15	14	13	12	11	10	9	8
RESERVED						STKALIGN	BFHFMIGN
R-0h						R/W-1h	R/W-0h
7	6	5	4	3	2	1	0
RESERVED			DIV0	UNALIGNED	RESERVED	MANIPEND	BASETHR
R-0h			R/W-0h	R/W-0h	R-0h	R/W-0h	R/W-0h

LEGEND: R/W = Read/Write; R = Read only; W1toCl = Write 1 to clear bit; *-n* = value after reset

Table 3-19. CFGCTRL Register Field Descriptions

Bit	Field	Type	Reset	Description
31-10	RESERVED	R	0h	
9	STKALIGN	R/W	1h	Stack Alignment on Exception Entry On exception entry, the processor uses bit 9 of the stacked PSR to indicate the stack alignment. On return from the exception, it uses this stacked bit to restore the correct stack alignment. 0h = The stack is 4-byte aligned. 1h = The stack is 8-byte aligned.
8	BFHFMIGN	R/W	0h	Ignore Bus Fault in NMI and Fault This bit enables handlers with priority -1 or -2 to ignore data bus faults caused by load and store instructions. The setting of this bit applies to the hard fault, NMI, and FAULTMASK-escalated handlers. Set this bit only when the handler and its data are in absolutely safe memory. The normal use of this bit is to probe system devices and bridges to detect control path problems and fix them. 0h = Data bus faults caused by load and store instructions cause a lock-up. 1h = Handlers running at priority -1 and -2 ignore data bus faults caused by load and store instructions.
7-5	RESERVED	R	0h	
4	DIV0	R/W	0h	Trap on Divide by 0 This bit enables faulting or halting when the processor executes an SDIV or UDIV instruction with a divisor of 0. 0h = Do not trap on divide by 0. A divide by zero returns a quotient of 0. 1h = Trap on divide by 0.

Copyright © 2017, Texas Instruments Incorporated

Table 3-19. CFGCTRL Register Field Descriptions (continued)

Bit	Field	Type	Reset	Description
3	UNALIGNED	R/W	0h	Trap on Unaligned Access Unaligned LDM, STM, LDRD, and STRD instructions always fault regardless of whether UNALIGNED is set. 0h = Do not trap on unaligned halfword and word accesses. 1h = Trap on unaligned halfword and word accesses. An unaligned access generates a usage fault.
2	RESERVED	R	0h	
1	MANIPEND	R/W	0h	Allow Main Interrupt Trigger 0h = Disables unprivileged software access to the SWTRIG register. 1h = Enables unprivileged software access to the SWTRIG register.
0	BASETHR	R/W	0h	Thread State Control 0h = The processor can enter Thread mode only when no exception is active. 1h = The processor can enter Thread mode from any level under the control of an EXC_RETURN value.

Copyright © 2017, Texas Instruments Incorporated

3.3.1.17 SYSPRI1 Register (Offset = D18h) [reset = 0h]

SYSPRI1 is shown in Figure 3-17 and described in Table 3-20.

Return to Summary Table.

The SYSPRI1 register configures the priority level, 0 to 7 of the usage fault, bus fault, and memory management fault exception handlers. This register is byte-accessible.

NOTE: This register can only be accessed from privileged mode.

Figure 3-17. SYSPRI1 Register

31	30	29	28	27	26	25	24	23	22	21	20	19	18	17	16
RESERVED								USAGE			RESERVED				
R-0h								R/W-0h			R-0h				
15	14	13	12	11	10	9	8	7	6	5	4	3	2	1	0
BUS			RESERVED					MEM			RESERVED				
R/W-0h			R-0h					R/W-0h			R-0h				

LEGEND: R/W = Read/Write; R = Read only; W1toCl = Write 1 to clear bit; *-n* = value after reset

Table 3-20. SYSPRI1 Register Field Descriptions

Bit	Field	Type	Reset	Description
31-24	RESERVED	R	0h	
23-21	USAGE	R/W	0h	Usage Fault Priority This field configures the priority level of the usage fault. Configurable priority values are in the range 0-7, with lower values having higher priority.
20-16	RESERVED	R	0h	
15-13	BUS	R/W	0h	Bus Fault Priority This field configures the priority level of the bus fault. Configurable priority values are in the range 0-7, with lower values having higher priority.
12-8	RESERVED	R	0h	
7-5	MEM	R/W	0h	Memory Management Fault Priority This field configures the priority level of the memory management fault. Configurable priority values are in the range 0-7, with lower values having higher priority.
4-0	RESERVED	R	0h	

Copyright © 2017, Texas Instruments Incorporated

3.3.1.18 SYSPRI2 Register (Offset = D1Ch) [reset = 0h]

SYSPRI2 is shown in Figure 3-18 and described in Table 3-21.

Return to Summary Table.

The SYSPRI2 register configures the priority level, 0 to 7 of the SVCall handler. This register is byte-accessible.

NOTE: This register can only be accessed from privileged mode.

Figure 3-18. SYSPRI2 Register

31	30	29	28	27	26	25	24	23	22	21	20	19	18	17	16	15	14	13	12	11	10	9	8	7	6	5	4	3	2	1	0
SVC			RESERVED																												
R/W-0h			R-0h																												

LEGEND: R/W = Read/Write; R = Read only; W1toCl = Write 1 to clear bit; *-n* = value after reset

Table 3-21. SYSPRI2 Register Field Descriptions

Bit	Field	Type	Reset	Description
31-29	SVC	R/W	0h	SVCall Priority This field configures the priority level of SVCall. Configurable priority values are in the range 0-7, with lower values having higher priority.
28-0	RESERVED	R	0h	

Copyright © 2017, Texas Instruments Incorporated

3.3.1.19 SYSPRI3 Register (Offset = D20h) [reset = 0h]

SYSPRI3 is shown in Figure 3-19 and described in Table 3-22.

Return to Summary Table.

The SYSPRI3 register configures the priority level, 0 to 7 of the SysTick exception and PendSV handlers. This register is byte-accessible.

NOTE: This register can only be accessed from privileged mode.

Figure 3-19. SYSPRI3 Register

31	30	29	28	27	26	25	24	23	22	21	20	19	18	17	16
TICK			RESERVED					PENDSV			RESERVED				
R/W-0h			R-0h					R/W-0h			R-0h				
15	14	13	12	11	10	9	8	7	6	5	4	3	2	1	0
RESERVED								DEBUG			RESERVED				
R-0h								R/W-0h			R-0h				

LEGEND: R/W = Read/Write; R = Read only; W1toCl = Write 1 to clear bit; *-n* = value after reset

Table 3-22. SYSPRI3 Register Field Descriptions

Bit	Field	Type	Reset	Description
31-29	TICK	R/W	0h	SysTick Exception Priority This field configures the priority level of the SysTick exception. Configurable priority values are in the range 0-7, with lower values having higher priority.
28-24	RESERVED	R	0h	
23-21	PENDSV	R/W	0h	PendSV Priority This field configures the priority level of PendSV. Configurable priority values are in the range 0-7, with lower values having higher priority.
20-8	RESERVED	R	0h	
7-5	DEBUG	R/W	0h	Debug Priority This field configures the priority level of Debug. Configurable priority values are in the range 0-7, with lower values having higher priority.
4-0	RESERVED	R	0h	

Copyright © 2017, Texas Instruments Incorporated

3.3.1.20 SYSHNDCTRL Register (Offset = D24h) [reset = 0h]

SYSHNDCTRL is shown in Figure 3-20 and described in Table 3-23.

Return to Summary Table.

The SYSHNDCTRL register enables the system handlers and indicates the pending status of the usage fault, bus fault, memory management fault, and SVC exceptions, as well as the active status of the system handlers. If a system handler is disabled and the corresponding fault occurs, the processor treats the fault as a hard fault. This register can be modified to change the pending or active status of system exceptions. An OS kernel can write to the active bits to perform a context switch that changes the current exception type.

NOTE: This register can only be accessed from privileged mode.

CAUTION

Software that changes the value of an active bit in this register without correct adjustment to the stacked content can cause the processor to generate a fault exception. Ensure software that writes to this register retains and subsequently restores the current active status. If the value of a bit in this register must be modified after enabling the system handlers, a read-modify-write procedure must be used to ensure that only the required bit is modified.

Figure 3-20. SYSHNDCTRL Register

31	30	29	28	27	26	25	24
RESERVED							
R-0h							
23	22	21	20	19	18	17	16
RESERVED					USAGE	BUS	MEM
R-0h					R/W-0h	R/W-0h	R/W-0h
15	14	13	12	11	10	9	8
SVC	BUSP	MEMP	USAGEP	TICK	PNDSV	RESERVED	MON
R/W-0h	R/W-0h	R/W-0h	R/W-0h	R/W-0h	R/W-0h	R-0h	R/W-0h
7	6	5	4	3	2	1	0
SVCA	RESERVED			USGA	RESERVED	BUSA	MEMA
R/W-0h	R-0h			R/W-0h	R-0h	R/W-0h	R/W-0h

LEGEND: R/W = Read/Write; R = Read only; W1toCl = Write 1 to clear bit; *-n* = value after reset

Table 3-23. SYSHNDCTRL Register Field Descriptions

Bit	Field	Type	Reset	Description
31-19	RESERVED	R	0h	
18	USAGE	R/W	0h	Usage Fault Enable 0h = Disables the usage fault exception. 1h = Enables the usage fault exception.
17	BUS	R/W	0h	Bus Fault Enable 0h = Disables the bus fault exception. 1h = Enables the bus fault exception.
16	MEM	R/W	0h	Memory Management Fault Enable 0h = Disables the memory management fault exception. 1h = Enables the memory management fault exception.

Copyright © 2017, Texas Instruments Incorporated

Table 3-23. SYSHNDCTRL Register Field Descriptions (continued)

Bit	Field	Type	Reset	Description
15	SVC	R/W	0h	SVC Call Pending This bit can be modified to change the pending status of the SVC call exception. 0h = An SVC call exception is not pending. 1h = An SVC call exception is pending.
14	BUSP	R/W	0h	Bus Fault Pending This bit can be modified to change the pending status of the bus fault exception. 0h = A bus fault exception is not pending. 1h = A bus fault exception is pending.
13	MEMP	R/W	0h	Memory Management Fault Pending This bit can be modified to change the pending status of the memory management fault exception. 0h = A memory management fault exception is not pending. 1h = A memory management fault exception is pending.
12	USAGEP	R/W	0h	Usage Fault Pending This bit can be modified to change the pending status of the usage fault exception. 0h = A usage fault exception is not pending. 1h = A usage fault exception is pending.
11	TICK	R/W	0h	SysTick Exception Active This bit can be modified to change the active status of the SysTick exception, however, see the Caution above before setting this bit. 0h = A SysTick exception is not active. 1h = A SysTick exception is active.
10	PNDSV	R/W	0h	PendSV Exception Active This bit can be modified to change the active status of the PendSV exception, however, see the Caution above before setting this bit. 0h = A PendSV exception is not active. 1h = A PendSV exception is active.
9	RESERVED	R	0h	
8	MON	R/W	0h	Debug Monitor Active 0h = The Debug monitor is not active. 1h = The Debug monitor is active.
7	SVCA	R/W	0h	SVC Call Active This bit can be modified to change the active status of the SVC call exception, however, see the Caution above before setting this bit. 0h = SVC call is not active. 1h = SVC call is active.
6-4	RESERVED	R	0h	
3	USGA	R/W	0h	Usage Fault Active This bit can be modified to change the active status of the usage fault exception, however, see the Caution above before setting this bit. 0h = Usage fault is not active. 1h = Usage fault is active.
2	RESERVED	R	0h	
1	BUSA	R/W	0h	Bus Fault Active This bit can be modified to change the active status of the bus fault exception, however, see the Caution above before setting this bit. 0h = Bus fault is not active. 1h = Bus fault is active.

Copyright © 2017, Texas Instruments Incorporated

Table 3-23. SYSHNDCTRL Register Field Descriptions (continued)

Bit	Field	Type	Reset	Description
0	MEMA	R/W	0h	Memory Management Fault Active This bit can be modified to change the active status of the memory management fault exception, however, see the Caution above before setting this bit. 0h = Memory management fault is not active. 1h = Memory management fault is active.

Copyright © 2017, Texas Instruments Incorporated

3.3.1.21 FAULTSTAT Register (Offset = D28h) [reset = 0h]

FAULTSTAT is shown in Figure 3-21 and described in Table 3-24.

Return to Summary Table.

The FAULTSTAT register indicates the cause of a memory management fault, bus fault, or usage fault. Each of these functions is assigned to a subregister as follows:

- Usage Fault Status (UFAULTSTAT), bits 31:16
- Bus Fault Status (BFAULTSTAT), bits 15:8
- Memory Management Fault Status (MFAULTSTAT), bits 7:0 (Not applicable for CC32xx)

FAULTSTAT is byte-accessible.

FAULTSTAT or its subregisters can be accessed as follows:

- The complete FAULTSTAT register, with a word access to offset 0xD28
- The MFAULTSTAT, with a byte access to offset 0xD28
- The MFAULTSTAT and BFAULTSTAT, with a halfword access to offset 0xD28
- The BFAULTSTAT, with a byte access to offset 0xD29
- The UFAULTSTAT, with a halfword access to offset 0xD2A

Bits are cleared by writing a 1 to them.

In a fault handler, the true faulting address can be determined by:

1. Read and save the Memory Management Fault Address (MMADDR) or Bus Fault Address (FAULTADDR) value.
2. Read the MMARV bit in MFAULTSTAT, or the BFARV bit in BFAULTSTAT to determine if the MMADDR or FAULTADDR contents are valid.

Software must follow this sequence because another higher priority exception might change the MMADDR or FAULTADDR value. For example, if a higher priority handler preempts the current fault handler, the other fault might change the MMADDR or FAULTADDR value.

NOTE: This register can only be accessed from privileged mode.

Figure 3-21. FAULTSTAT Register

31	30	29	28	27	26	25	24
RESERVED						DIV0	UNALIGN
R-0h						R/W1C-0h	R/W1C-0h
23	22	21	20	19	18	17	16
RESERVED				NOCP	INVPC	INVSTAT	UNDEF
R-0h				R/W1C-0h	R/W1C-0h	R/W1C-0h	R/W1C-0h
15	14	13	12	11	10	9	8
BFARV	RESERVED	BLSPERR	BSTKE	BUSTKE	IMPRE	PRECISE	IBUS
R/W1C-0h	R-0h	R/W1C-0h	R/W1C-0h	R/W1C-0h	R/W1C-0h	R/W1C-0h	R/W1C-0h
7	6	5	4	3	2	1	0
MMARV	RESERVED	MLSPERR	MSTKE	MUSTKE	RESERVED	DERR	IERR
R/W1C-0h	R-0h	R/W1C-0h	R/W1C-0h	R/W1C-0h	R-0h	R/W1C-0h	R/W1C-0h

LEGEND: R/W = Read/Write; R = Read only; W1toCl = Write 1 to clear bit; *-n* = value after reset

Copyright © 2017, Texas Instruments Incorporated

Table 3-24. FAULTSTAT Register Field Descriptions

Bit	Field	Type	Reset	Description
31-26	RESERVED	R	0h	
25	DIV0	R/W1C	0h	Divide-by-Zero Usage Fault When this bit is set, the PC value stacked for the exception return points to the instruction that performed the divide by zero. Trapping on divide-by-zero is enabled by setting the DIV0 bit in the Configuration and Control (CFGCTRL) register. This bit is cleared by writing a 1 to it. 0h = No divide-by-zero fault has occurred, or divide-by-zero trapping is not enabled. 1h = The processor has executed an SDIV or UDIV instruction with a divisor of 0.
24	UNALIGN	R/W1C	0h	Unaligned Access Usage Fault Unaligned LDM, STM, LDRD, and STRD instructions always fault regardless of the configuration of this bit. Trapping on unaligned access is enabled by setting the UNALIGNED bit in the CFGCTRL register. This bit is cleared by writing a 1 to it. 0h = No unaligned access fault has occurred, or unaligned access trapping is not enabled. 1h = The processor has made an unaligned memory access.
23-20	RESERVED	R	0h	
19	NOCP	R/W1C	0h	No Coprocessor Usage Fault This bit is cleared by writing a 1 to it. 0h = A usage fault has not been caused by attempting to access a coprocessor. 1h = The processor has attempted to access a coprocessor.
18	INVPC	R/W1C	0h	Invalid PC Load Usage Fault When this bit is set, the PC value stacked for the exception return points to the instruction that tried to perform the illegal load of the PC. This bit is cleared by writing a 1 to it. 0h = A usage fault has not been caused by attempting to load an invalid PC value. 1h = The processor has attempted an illegal load of EXC_RETURN to the PC as a result of an invalid context or an invalid EXC_RETURN value.
17	INVSTAT	R/W1C	0h	Invalid State Usage Fault When this bit is set, the PC value stacked for the exception return points to the instruction that attempted the illegal use of the Execution Program Status Register (EPSR) register. This bit is not set if an undefined instruction uses the EPSR register. This bit is cleared by writing a 1 to it. 0h = A usage fault has not been caused by an invalid state. 1h = The processor has attempted to execute an instruction that makes illegal use of the EPSR register.
16	UNDEF	R/W1C	0h	Undefined Instruction Usage Fault When this bit is set, the PC value stacked for the exception return points to the undefined instruction. An undefined instruction is an instruction that the processor cannot decode. This bit is cleared by writing a 1 to it. 0h = A usage fault has not been caused by an undefined instruction. 1h = The processor has attempted to execute an undefined instruction.

Copyright © 2017, Texas Instruments Incorporated

Table 3-24. FAULTSTAT Register Field Descriptions (continued)

Bit	Field	Type	Reset	Description
15	BFARV	R/W1C	0h	Bus Fault Address Register Valid This bit is set after a bus fault, where the address is known. Other faults can clear this bit, such as a memory management fault occurring later. If a bus fault occurs and is escalated to a hard fault because of priority, the hard fault handler must clear this bit. This action prevents problems if returning to a stacked active bus fault handler whose FAULTADDR register value has been overwritten. This bit is cleared by writing a 1 to it. 0h = The value in the Bus Fault Address (FAULTADDR) register is not a valid fault address. 1h = The FAULTADDR register is holding a valid fault address.
14	RESERVED	R	0h	
13	BLSPERR	R/W1C	0h	N/A
12	BSTKE	R/W1C	0h	Stack Bus Fault When this bit is set, the SP is still adjusted but the values in the context area on the stack might be incorrect. A fault address is not written to the FAULTADDR register. This bit is cleared by writing a 1 to it. 0h = No bus fault has occurred on stacking for exception entry. 1h = Stacking for an exception entry has caused one or more bus faults.
11	BUSTKE	R/W1C	0h	Unstack Bus Fault This fault is chained to the handler. Thus, when this bit is set, the original return stack is still present. The SP is not adjusted from the failing return, a new save is not performed, and a fault address is not written to the FAULTADDR register. This bit is cleared by writing a 1 to it. 0h = No bus fault has occurred on unstacking for a return from exception. 1h = Unstacking for a return from exception has caused one or more bus faults.
10	IMPRE	R/W1C	0h	Imprecise Data Bus Error When this bit is set, a fault address is not written to the FAULTADDR register. This fault is asynchronous. Therefore, if the fault is detected when the priority of the current process is higher than the bus fault priority, the bus fault becomes pending and becomes active only when the processor returns from all higher-priority processes. If a precise fault occurs before the processor enters the handler for the imprecise bus fault, the handler detects that both the IMPRE bit is set and one of the precise fault status bits is set. This bit is cleared by writing a 1 to it. 0h = An imprecise data bus error has not occurred. 1h = A data bus error has occurred, but the return address in the stack frame is not related to the instruction that caused the error.
9	PRECISE	R/W1C	0h	Precise Data Bus Error When this bit is set, the fault address is written to the FAULTADDR register. This bit is cleared by writing a 1 to it. 0h = A precise data bus error has not occurred. 1h = A data bus error has occurred, and the PC value stacked for the exception return points to the instruction that caused the fault.
8	IBUS	R/W1C	0h	Instruction Bus Error The processor detects the instruction bus error on prefetching an instruction, but sets this bit only if it attempts to issue the faulting instruction. When this bit is set, a fault address is not written to the FAULTADDR register. This bit is cleared by writing a 1 to it. 0h = An instruction bus error has not occurred. 1h = An instruction bus error has occurred.

Copyright © 2017, Texas Instruments Incorporated

Table 3-24. FAULTSTAT Register Field Descriptions (continued)

Bit	Field	Type	Reset	Description
7	MMARV	R/W1C	0h	Memory Management Fault Address Register Valid If a memory management fault occurs and is escalated to a hard fault because of priority, the hard fault handler must clear this bit. This action prevents problems if returning to a stacked active memory management fault handler whose MMADDR register value has been overwritten. 0h = The This bit is cleared by writing a 1 to it. value in the Memory Management Fault Address (MMADDR) register is not a valid fault address. 1h = The MMADDR register is holding a valid fault address.
6	RESERVED	R	0h	
5	MLSPERR	R/W1C	0h	N/A
4	MSTKE	R/W1C	0h	Stack Access Violation When this bit is set, the SP is still adjusted but the values in the context area on the stack might be incorrect. A fault address is not written to the MMADDR register. This bit is cleared by writing a 1 to it. 0h = No memory management fault has occurred on stacking for exception entry. 1h = Stacking for an exception entry has caused one or more access violations.
3	MUSTKE	R/W1C	0h	Unstack Access Violation This fault is chained to the handler. Thus, when this bit is set, the original return stack is still present. The SP is not adjusted from the failing return, a new save is not performed, and a fault address is not written to the MMADDR register. This bit is cleared by writing a 1 to it. 0h = No memory management fault has occurred on unstacking for a return from exception. 1h = Unstacking for a return from exception has caused one or more access violations.
2	RESERVED	R	0h	
1	DERR	R/W1C	0h	Data Access Violation When this bit is set, the PC value stacked for the exception return points to the faulting instruction and the address of the attempted access is written to the MMADDR register. This bit is cleared by writing a 1 to it. 0h = A data access violation has not occurred. 1h = The processor attempted a load or store at a location that does not permit the operation.
0	IERR	R/W1C	0h	Instruction Access Violation This fault occurs on any access to an XN region. When this bit is set, the PC value stacked for the exception return points to the faulting instruction and the address of the attempted access is not written to the MMADDR register. This bit is cleared by writing a 1 to it. 0h = An instruction access violation has not occurred. 1h = The processor attempted an instruction fetch from a location that does not permit execution.

Copyright © 2017, Texas Instruments Incorporated

3.3.1.22 HFAULTSTAT Register (Offset = D2Ch) [reset = 0h]

HFAULTSTAT is shown in Figure 3-22 and described in Table 3-25.

Return to Summary Table.

The HFAULTSTAT register gives information about events that activate the hard fault handler. Bits are cleared by writing a 1 to them.

NOTE: This register can only be accessed from privileged mode.

Figure 3-22. HFAULTSTAT Register

31	30	29	28	27	26	25	24
DBG	FORCED	RESERVED					
R/W1C-0h	R/W1C-0h	R-0h					
23	22	21	20	19	18	17	16
RESERVED							
R-0h							
15	14	13	12	11	10	9	8
RESERVED							
R-0h							
7	6	5	4	3	2	1	0
RESERVED						VECT	RESERVED
R-0h						R/W1C-0h	R-0h

LEGEND: R/W = Read/Write; R = Read only; W1toCl = Write 1 to clear bit; *-n* = value after reset

Table 3-25. HFAULTSTAT Register Field Descriptions

Bit	Field	Type	Reset	Description
31	DBG	R/W1C	0h	Debug Event This bit is reserved for debug use. This bit must be written as a 0, otherwise behavior is unpredictable.
30	FORCED	R/W1C	0h	Forced Hard Fault When this bit is set, the hard fault handler must read the other fault status registers to find the cause of the fault. This bit is cleared by writing a 1 to it. 0h = No forced hard fault has occurred. 1h = A forced hard fault has been generated by escalation of a fault with configurable priority that cannot be handled, either because of priority or because it is disabled.
29-2	RESERVED	R	0h	
1	VECT	R/W1C	0h	Vector Table Read Fault This error is always handled by the hard fault handler. When this bit is set, the PC value stacked for the exception return points to the instruction that was preempted by the exception. This bit is cleared by writing a 1 to it. 0h = No bus fault has occurred on a vector table read. 1h = A bus fault occurred on a vector table read.
0	RESERVED	R	0h	

Copyright © 2017, Texas Instruments Incorporated

3.3.1.23 FAULTDDR Register (Offset = D38h) [reset = 0h]

FAULTDDR is shown in Figure 3-23 and described in Table 3-26.

Return to Summary Table.

The FAULTADDR register contains the address of the location that generated a bus fault. When an unaligned access faults, the address in the FAULTADDR register is the one requested by the instruction, even if it is not the address of the fault. Bits in the Bus Fault Status (BFAULTSTAT) register indicate the cause of the fault and whether the value in the FAULTADDR register is valid.

NOTE: This register can only be accessed from privileged mode.

Figure 3-23. FAULTDDR Register

31	30	29	28	27	26	25	24	23	22	21	20	19	18	17	16	15	14	13	12	11	10	9	8	7	6	5	4	3	2	1	0
ADDR																															
R/W-0h																															

LEGEND: R/W = Read/Write; R = Read only; W1toCl = Write 1 to clear bit; *-n* = value after reset

Table 3-26. FAULTDDR Register Field Descriptions

Bit	Field	Type	Reset	Description
31-0	ADDR	R/W	0h	Fault Address When the FAULTADDRV bit of BFAULTSTAT is set, this field holds the address of the location that generated the bus fault.

Copyright © 2017, Texas Instruments Incorporated

3.3.1.24 SWTRIG Register (Offset = F00h) [reset = 0h]

SWTRIG is shown in Figure 3-24 and described in Table 3-27.

Return to Summary Table.

Writing an interrupt number to the SWTRIG register generates a software-generated interrupt (SGI). When the MAINPEND bit in the Configuration and Control (CFGCTRL) register is set, unprivileged software can access the SWTRIG register.

NOTE: Only privileged software can enable unprivileged access to the SWTRIG register.

Figure 3-24. SWTRIG Register

31	30	29	28	27	26	25	24	23	22	21	20	19	18	17	16	15	14	13	12	11	10	9	8	7	6	5	4	3	2	1	0
RESERVED																								INTID							
R-0h																								W-0h							

LEGEND: R/W = Read/Write; R = Read only; W1toCl = Write 1 to clear bit; *-n* = value after reset

Table 3-27. SWTRIG Register Field Descriptions

Bit	Field	Type	Reset	Description
31-8	RESERVED	R	0h	
7-0	INTID	W	0h	Interrupt ID This field holds the interrupt ID of the required SGI. For example, a value of 0x3 generates an interrupt on IRQ3.

Copyright © 2017, Texas Instruments Incorporated

Direct Memory Access (DMA)

Topic **Page**

4.1 Overview **114**
4.2 Functional Description **114**
4.3 Register Description **124**

Copyright © 2017, Texas Instruments Incorporated

4.1 Overview

The CC32xx microcontroller includes a Direct Memory Access (DMA) controller, known as micro-DMA (μDMA). The μDMA controller provides a way to offload data transfer tasks from the Cortex-M4 processor, allowing for more efficient use of the processor and the available bus bandwidth. The μDMA controller can perform transfers between memory and peripherals. It has dedicated channels for each supported on-chip module and can be programmed to automatically perform transfers between peripherals and memory, as the peripheral is ready to transfer more data.

The μDMA controller provides the following features:

- 32-channel configurable μDMA controller
- Support for memory-to-memory, memory-to-peripheral, and peripheral-to-memory in multiple transfer modes
  - Basic for simple transfer scenarios
  - Ping-pong for continuous data flow
  - Scatter-gather for a programmable list of up to 256 arbitrary transfers initiated from a single request
- Highly flexible and configurable channel operation
  - Independently configured and operated channels
  - Dedicated channels for supported on-chip modules
  - One channel each for receive and transmit path for bidirectional modules
  - Dedicated channel for software-initiated transfers
  - Optional software-initiated requests for any channel
- Two levels of priority
- Design optimizations for improved bus access performance between μDMA controller and the processor core
  - μDMA controller access is subordinate to core access
- Data sizes of 8, 16, and 32 bits
- Transfer size is programmable in binary steps from 1 to 1024
- Source and destination address increment size of byte, half-word, word, or no increment
- Interrupt on transfer completion, with a separate interrupt per channel

4.2 Functional Description

The μDMA controller is a flexible and highly configurable DMA controller designed to work efficiently with the Cortex-M4 processor core. It supports multiple data sizes and address increment schemes, multiple levels of priority among DMA channels, and several transfer modes to allow for sophisticated programmed data transfers. The μDMA controller's usage of the bus is always subordinate to the processor core, so it never delays a bus transaction by the processor.

Because the μDMA controller is only using otherwise-idle bus cycles, the data transfer bandwidth it provides is essentially free, with no impact on the rest of the system. The bus architecture has been optimized to greatly enhance the ability of the processor core and the μDMA controller to efficiently share the on-chip bus, thus improving performance. The optimizations include peripheral bus segmentation, which in many cases allow both the processor core and the μDMA controller to access the bus and perform simultaneous data transfers.

Each supported peripheral function has a dedicated channel on the μDMA controller that can be configured independently. The μDMA controller implements a configuration method using channel control structures maintained in system memory by the processor. While simple transfer modes are supported, it is also possible to build up sophisticated task lists in memory that allow the μDMA controller to perform arbitrary-sized transfers to and from arbitrary locations as part of a single transfer request. The μDMA controller also supports the use of ping-pong buffering to accommodate constant streaming of data to or from a peripheral.

Copyright © 2017, Texas Instruments Incorporated

Each channel also has a configurable arbitration size. The arbitration size is the number of items transferred in a burst before the µDMA controller re-arbitrates for channel priority. Using the arbitration size, it is possible to control exactly how many items are transferred to or from a peripheral each time it makes a µDMA service request.

4.2.1 Channel Assignment

Figure 4-1 depicts µDMA channel allocation. There ae 32 DMA channels assigned to various peripherals. Peripherals are mapped at multiple places to address the application need where any combination of peripheral can be used in tandem.

Figure 4-1. DMA Channel Assignment

DMACHMAPi Encoding	0	1	2	3
CH #				
0	GPTimer A0-A	SHA Cin		Software
1	GPTimer A0-B	SHA Din		Software
2	GPTimer A1-A	SHA Cout		Software
3	GPTimer A1-B	DES Cin		Software
4	GPTimer A2-A	DES Din	I2S (RX)	Software
5	GPTimer A2-B	DES Dout	I2S (TX)	Software
6	GPTimer A3-A	GSPI (RX)	GPIO A2	Software
7	GPTimer A3-B	GSPI (TX)	GPIO A3	Software
8	UART A0 (RX)	GPTimer A0-A	GPTimer A2-A	Software
9	UART A0 (TX)	GPTimer A0-B	GPTimer A2-B	Software
10	UART A1 (RX)	GPTimer A1-A	GPTimer A3-A	Software
11	UART A1 (TX)	GPTimer A1-B	GPTimer A3-B	Software
12	LSPI(RX) (link)			Software
13	LSPI(TX) (link)			Software
14	ADC 0		SDHOST RX	Software
15	ADC 2		SDHOST TX	Software
16	ADC 4	GPTimer A2-A		Software
17	ADC 6	GPTimer A2-B		Software
18	GPIO A0	AES Cin	McASP A0 (RX)	Software
19	GPIO A1	AES Cout	McASP A0 (TX)	Software
20	GPIO A2	AES Din		Software
21	GPIO A3	AES Dout		Software
22	Camera			Software
23	SDHOST RX	GPTimer A3-A	GPTimer A2-A	Software
24	SDHOST TX	GPTimer A3-B	GPTimer A2-B	Software
25	SSPI (RX) (Shared)	I2C A0 RX		Software
26	SSPI (TX) (Shared)	I2C A0 TX		Software
27		GPIO A0		Software
28		GPIO A1		Software
29				Software
30	GSPI (RX)	SDHOST RX	I2C A0 RX	Software
31	GSPI (TX)	SDHOST TX	I2C A0 TX	Software

Copyright © 2017, Texas Instruments Incorporated

4.2.2 Priority

The µDMA controller assigns priority to each channel based on the channel number and the priority level bit for the channel. Channel number 0 has the highest priority, and as the channel number increases, the priority of a channel decreases. Each channel has a priority level bit to provide two levels of priority: default priority and high priority. If the priority level bit is set, then that channel has higher priority than all other channels at default priority. If multiple channels are set for high priority, then the channel number determines relative priority among all the high priority channels.

The priority bit for a channel can be set using the DMA Channel Priority Set (PRIOSET) register and cleared with the DMA Channel Priority Clear (PRIOCLR) register.

4.2.3 Arbitration Size

When a µDMA channel requests a transfer, the µDMA controller arbitrates among all the channels making a request, then services the µDMA channel with the highest priority. Once a transfer begins, it continues for a selectable number of transfers before re-arbitrating among the requesting channels again. The arbitration size can be configured for each channel, ranging from 1 to 1024 item transfers. After the µDMA controller transfers the number of items specified by the arbitration size, it then checks among all the channels making a request, and services the channel with the highest priority. If a lower priority µDMA channel uses a large arbitration size, the latency for higher priority channels is increased, as the µDMA controller completes the lower priority burst before checking for higher priority requests. Therefore, lower priority channels should not use a large arbitration size for best response on high priority channels.

The arbitration size can also be thought of as a burst size, as it is the maximum number of items that are transferred at any one time in a burst. Here, the term arbitration refers to determination of µDMA channel priority, not arbitration for the bus. When the µDMA controller arbitrates for the bus, the processor always takes priority. Furthermore, the µDMA controller is held off whenever the processor must perform a bus transaction on the same bus, even in the middle of a burst transfer.

4.2.4 Channel Configuration

The µDMA controller uses an area of system memory to store a set of channel control structures in a table. The control table may have one or two entries for each µDMA channel. Each entry in the table structure contains source and destination pointers, transfer size, and transfer mode. The control table can be located anywhere in system memory, but it must be contiguous and aligned on a 1024-byte boundary.

Table 4-1 shows the layout in memory of the channel control table. Each channel may have one or two control structures in the control table: a primary control structure and an optional alternate control structure. The table is organized so that all of the primary entries are in the first half of the table, and all the alternate structures are in the second half of the table. The primary entry is used for simple transfer modes, where transfers can be reconfigured and restarted after each transfer is complete. In this case, the alternate control structures are not used and therefore only the first half of the table must be allocated in memory; the second half of the control table is not necessary, and that memory can be used for something else. If a more complex transfer mode is used such as ping-pong or scatter-gather, then the alternate control structure is also used and memory space should be allocated for the entire table.

Any unused memory in the control table may be used by the application. This includes the control structures for any channels that are unused by the application, as well as the unused control word for each channel.

Copyright © 2017, Texas Instruments Incorporated

Table 4-1. Channel Control Memory

Offset	Channel
0x0	Channel 0 – primary
0x10	Channel 1 – primary
….	
0x1F0	Channel 31 – primary
0x200	Channel 0 – alternate
0x210	Channel 1 – alternate
….	
0x3F0	Channel 31 – alternate

Table 4-2 shows an individual control structure entry in the control table. Each entry is aligned on a 16-byte boundary. The entry contains four long words: the source end pointer, the destination end pointer, the control word, and an unused entry. The end pointers point to the ending address of the transfer and are inclusive. If the source or destination is non-incrementing (as for a peripheral register), the pointer should point to the transfer address.

Table 4-2. Individual Control Structure

Offset	Description
0x000	Source end pointer
0x004	Destination end pointer
0x008	Control word
0x00C	Reserved

Transfer size is part of the control word. At the end of a transfer, the transfer size indicates 0, and the transfer mode indicates "stopped." Because the control word is modified by the µDMA controller, it must be reconfigured before each new transfer. The source and destination end pointers are not modified, so they can be left unchanged if the source or destination addresses remain the same.

Prior to starting a transfer, a µDMA channel must be enabled by setting the appropriate bit in the DMA Channel Enable Set (ENASET) register. A channel can be disabled by setting the channel bit in the DMA Channel Enable Clear (ENACLR) register. At the end of a complete µDMA transfer, the controller automatically disables the channel.

4.2.5 Transfer Mode

The µDMA controller supports several transfer modes. Two of the modes support simple one-time transfers. Several complex modes support a continuous flow of data.

4.2.5.1 Stop Mode

While stop is not actually a transfer mode, it is a valid value for the mode field of the control word. When the mode field has this value, the µDMA controller does not perform any transfers, and disables the channel if it is enabled.

4.2.5.2 Basic Mode

In basic mode, the µDMA controller performs transfers as long as there are more items to transfer, and a transfer request is present. This mode is used with peripherals that assert a µDMA request signal whenever the peripheral is ready for a data transfer. Basic mode should not be used in any situation where the request is momentary, even though the entire transfer should be completed. For example, a software-initiated transfer creates a momentary request, and in basic mode, only the number of transfers specified by the ARBSIZE field in the DMA Channel Control Word register are transferred on a software request, even if there is more data to transfer. When all of the items have been transferred using basic mode, the µDMA controller sets the channel to stop mode.

Copyright © 2017, Texas Instruments Incorporated

4.2.5.3 Auto Mode

Auto mode is similar to basic mode, except that once a transfer request is received, the transfer runs to completion, even if the µDMA request is removed. This mode is suitable for software-triggered transfers. Generally, auto mode is not used with a peripheral. When all the items have been transferred using auto mode, the µDMA controller sets the mode for that channel to stop.

4.2.5.4 Ping-Pong Mode

Ping-pong mode supports a continuous data flow to or from a peripheral. To use ping-pong mode, both the primary and alternate data structures must be implemented. Both structures are set up by the processor for data transfer between memory and a peripheral. The transfer is started using the primary control structure. When the transfer using the primary control structure is complete, the µDMA controller reads the alternate control structure for that channel to continue the transfer. Each time this happens, an interrupt is generated, and the processor can reload the control structure for the just-completed transfer. Data flow can continue indefinitely this way, using the primary and alternate control structures to switch back and forth between buffers as the data flows to or from the peripheral.

Copyright © 2017, Texas Instruments Incorporated

Figure 4-2. Ping-Pong Mode

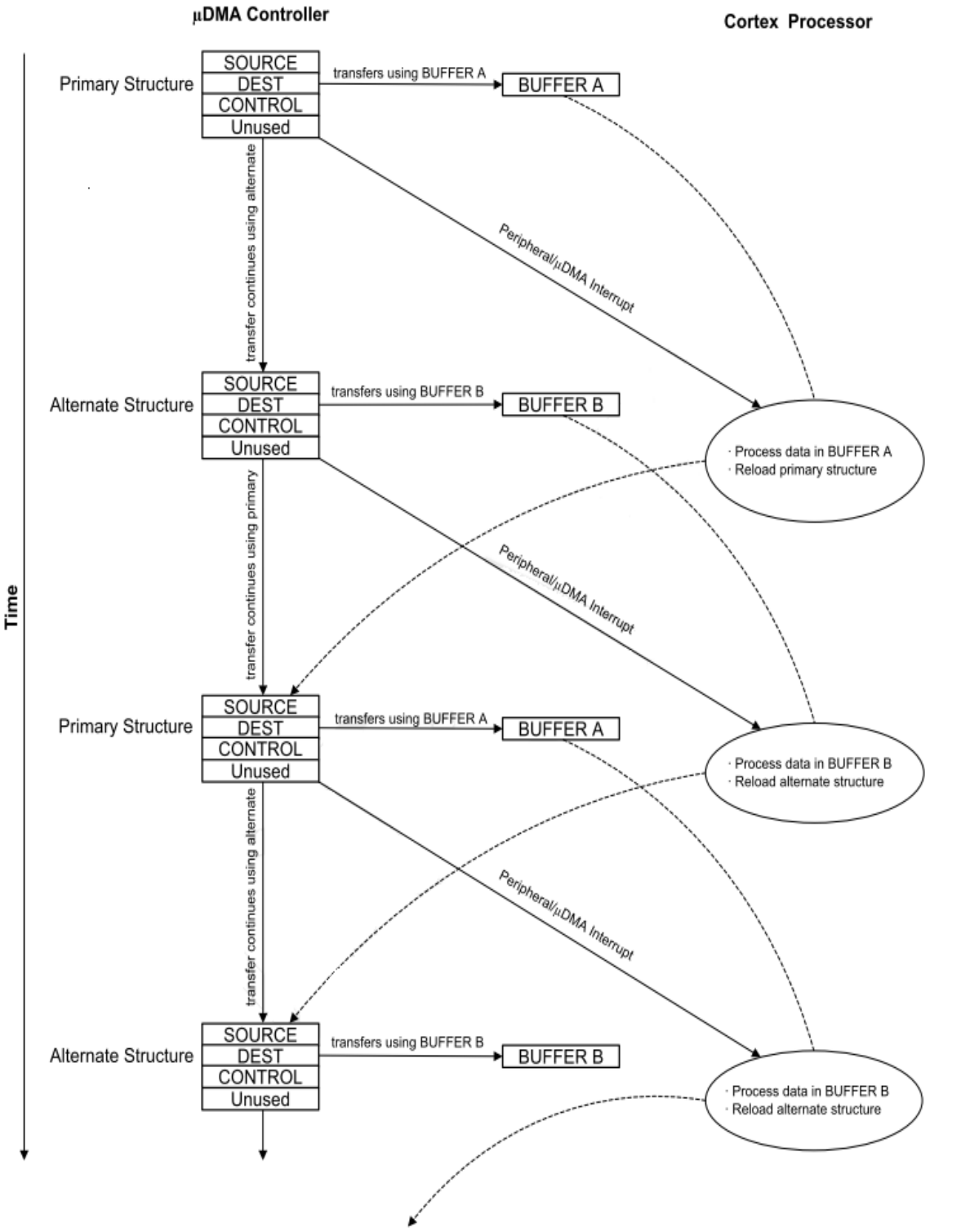

Copyright © 2017, Texas Instruments Incorporated

4.2.5.5 Memory Scatter-Gather

Memory scatter-gather mode is a complex mode used when data must be transferred to or from varied locations in memory instead of a set of contiguous locations in a memory buffer. For example, a gather µDMA operation could selectively read the payload of several stored packets of a communication protocol and store them together in sequence in a memory buffer.

In memory scatter-gather mode, the primary control structure programs the alternate control structure from a table in memory. The table is set up by the processor software and contains a list of control structures, each containing the source and destination end pointers, and the control word for a specific transfer. The mode of each control word must be set to scatter-gather mode. Each entry in the table is in turn copied to the alternate structure where it is then executed. The µDMA controller alternates between using the primary control structure to copy the next transfer instruction from the list, and then executing the new transfer instruction. The end of the list is marked by programming the control word for the last entry to use basic transfer mode. Once the last transfer is performed using basic mode, the µDMA controller stops. A completion interrupt is generated only after the last transfer. It is possible to loop the list by having the last entry copy the primary control structure to point back to the beginning of the list (or to a new list). It is also possible to trigger a set of other channels to perform a transfer, either directly, by programming a write to the software trigger for another channel, or indirectly, by causing a peripheral action that results in a µDMA request.

By programming the µDMA controller using this method, a set of arbitrary transfers can be performed based on a single µDMA request.

Figure 4-3 shows an example of operation in memory scatter-gather mode. This example shows a gather operation, where data in three separate buffers in memory is copied together into one buffer. Figure 4-3 shows how the application sets up a µDMA task list in memory used by the controller to perform three sets of copy operations from different locations in memory. The primary control structure for the channel used for the operation is configured to copy from the task list to the alternate control structure.

Copyright © 2017, Texas Instruments Incorporated

Figure 4-3. Memory Scatter-Gather Mode

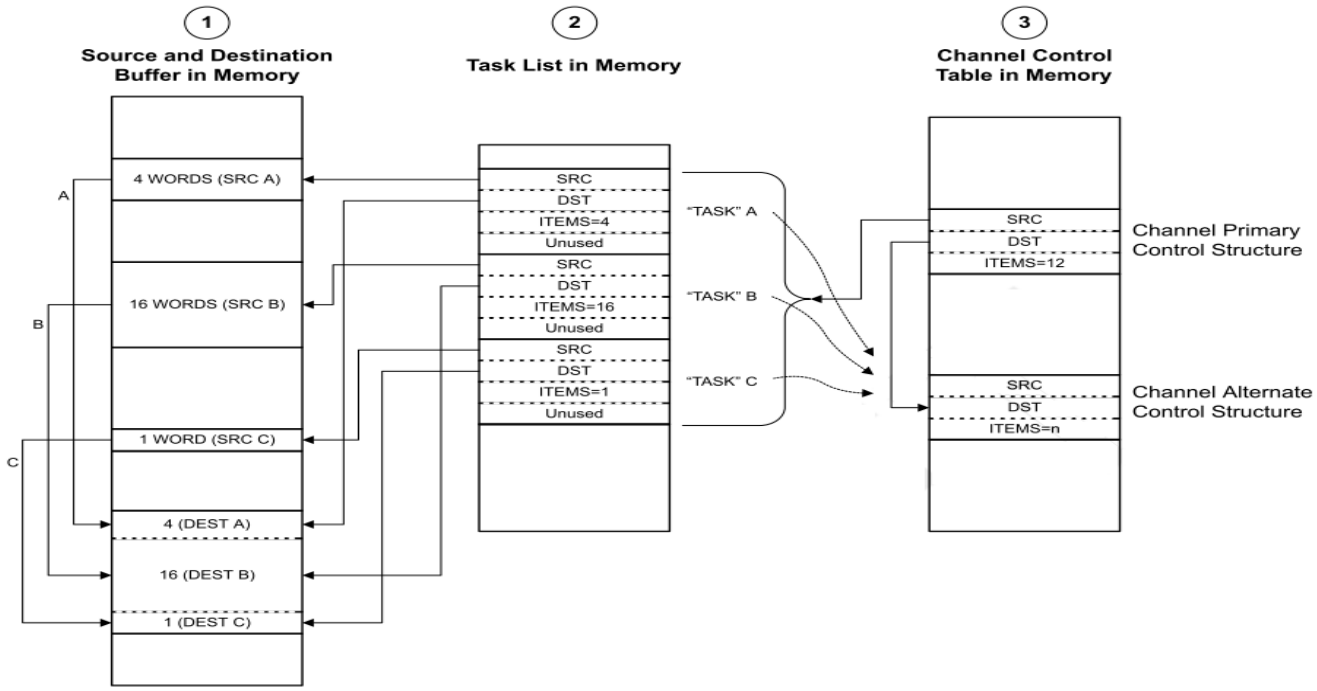

(1) Application must copy data items from three separate locations in memory into one combined buffer.

(2) Application sets up a µDMA task list in memory, which contains the pointers and control configuration for three µDMA copy tasks.

(3) Application sets up the channel primary control structure to copy each task configuration, one at a time, to the alternate control structure, where it is executed by the µDMA controller

4.2.5.6 Peripheral Scatter-Gather

Peripheral scatter-gather mode is very similar to memory scatter-gather, except that the transfers are controlled by a peripheral making a µDMA request. Upon detecting a request from the peripheral, the µDMA controller uses the primary control structure to copy one entry from the list to the alternate control structure, and then performs the transfer. At the end of this transfer, the next transfer is started only if the peripheral again asserts a µDMA request. The µDMA controller continues to perform transfers from the list only when the peripheral is making a request, until the last transfer is complete. A completion interrupt is generated only after the last transfer.

By using this method, the µDMA controller can transfer data to or from a peripheral from a set of arbitrary locations whenever the peripheral is ready to transfer data.

Copyright © 2017, Texas Instruments Incorporated

Figure 4-4. Peripheral Scatter-Gather Mode

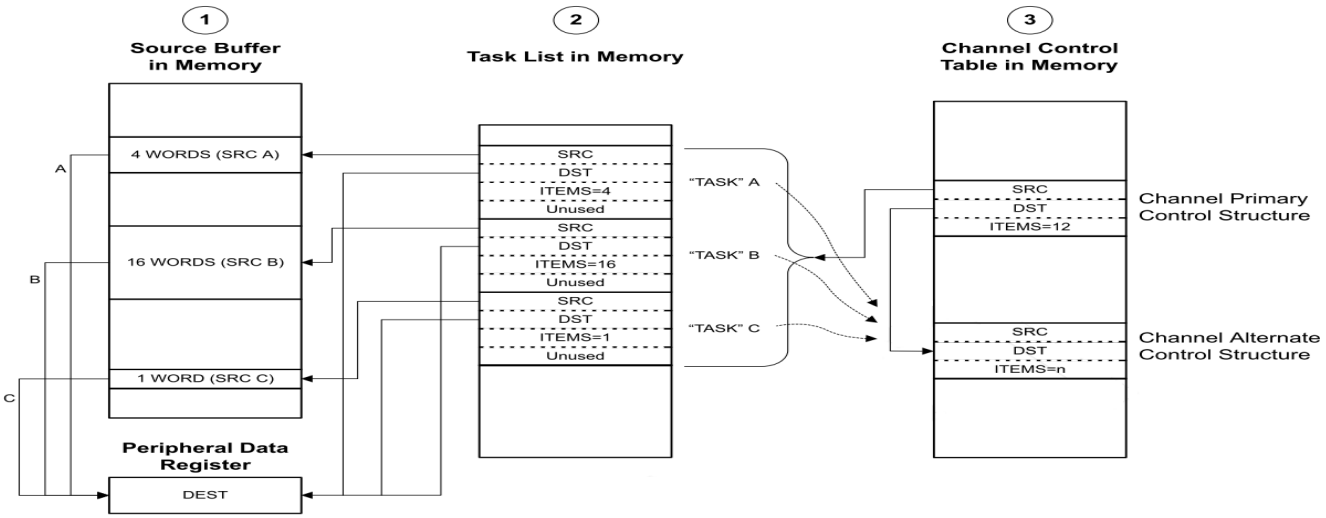

(1) Application has a need to copy data items from three separate locations in memory into a peripheral data register.

(2) Application sets up a µDMA "task list" in memory, which contains the pointers and control configuration for three µDMA copy "tasks."

(3) Application sets up the channel primary control structure to copy each task configuration, one at a time, to the alternate control structure, where it is executed by the µDMA controller

4.2.6 Transfer Size and Increment

The µDMA controller supports transfer data sizes of 8, 16, or 32 bits. The source and destination data size must be the same for any given transfer. The source and destination address can be auto-incremented by bytes, half-words, or words, or can be set to no increment. The source and destination address increment values can be set independently, and it is not necessary for the address increment to match the data size as long as the increment is the same or larger than the data size. For example, it is possible to perform a transfer using 8-bit data size, but using an address increment of full words (4 bytes). The data to be transferred must be aligned in memory according to the data size (8, 16, or 32 bits).

Table 4-3 shows the configuration to read from a peripheral that supplies 8-bit data.

Table 4-3. 8-bit Data Peripheral Configuration

Field	Configuration
Source data size	8 bit
Destination data size	8 bit
Source address increment	No
Destination address increment	Byte
Source end pointer	Peripheral FIFO register
Destination end pointer	End of data buffer in memory

Copyright © 2017, Texas Instruments Incorporated

4.2.7 Peripheral Interface

There are two main classes of µDMA-connected peripherals:

- Peripherals with FIFOs serviced by the µDMA to transmit or receive data
- Peripherals that provide trigger inputs to the µDMA

4.2.7.1 FIFO Peripherals

FIFO peripherals contain a FIFO of data to be sent and a FIFO of data that has been received. The µDMA controller transfers data between these FIFOs and system memory. For example, when a UART FIFO contains one or more entries, a single transfer request is sent to the µDMA for processing. If this request has not been processed and the UART FIFO reaches the interrupt FIFO level, another interrupt is sent to the µDMA which is higher priority than the single-transfer request. In this instance, an ARBSIZ transfer is performed as configured in the DMACHCTL register. After the transfer is complete, the µDMA sends a receive or transmit complete interrupt to the UART register.

If the SETn bit of the FIFO peripheral is set in the DMA Channel Useburst Set (DMAUSEBURSTSET) register, then the µDMA only performs transfers defined by the ARBSIZ bit field in the DMACHCTL register for better bus utilization. For peripherals that tend to transmit and receive in bursts, such as the UART, TI recommends against the use of this configuration because it could cause the tail end of transmissions to stick in the FIFO.

4.2.7.2 Trigger Peripherals

Certain peripherals, such as the general purpose timer, trigger an interrupt to the µDMA controller when a programmed event occurs. When a trigger event occurs, the µDMA executes a transfer defined by the ARBSIZ bit field in the DMACHCTL register. If only a single transfer is needed for a µDMA trigger, then the ARBSIZ field is set to 0x1. If the trigger peripheral generates another µDMA request while the prior one is being serviced and that particular channel is the highest priority asserted channel, the second request is processed as soon as the handling of the first is complete. If two additional trigger peripheral µDMA requests are generated prior to the completion of the first, the third request is lost.

4.2.7.3 Software Request

Few µDMA channels are dedicated to software-initiated transfers. This channel also has a dedicated interrupt to signal completion of a µDMA transfer. A transfer is initiated by software by first configuring and enabling the transfer, and then issuing a software request using the DMA Channel Software Request (DMASWREQ) register. For software-based transfers, use the auto transfer mode.

The DMASWREQ register can initiate a transfer on any channel. If a request is initiated by software using a peripheral µDMA channel, then the completion interrupt occurs on the interrupt vector for the peripheral instead of the software interrupt vector. Any channel may be used for software requests, as long as the corresponding peripheral is not using µDMA for data transfer.

4.2.8 Interrupts and Errors

When a µDMA transfer is complete, a dma_done signal is sent to the peripheral that initiated the µDMA event. Interrupts can be enabled within the peripheral to trigger on µDMA transfer completion. If the transfer uses the software µDMA channel, then the completion interrupt occurs on the dedicated software µDMA interrupt vector. If the µDMA controller encounters a bus or memory protection error as it attempts to perform a data transfer, it disables the µDMA channel that caused the error and generates an interrupt on the µDMA error interrupt vector. The processor can read the DMA Bus Error Clear (DMAERRCLR) register to determine if an error is pending. The ERRCLR bit is set if an error occurred. The error can be cleared by writing a 1 to the ERRCLR bit.

Copyright © 2017, Texas Instruments Incorporated

4.3 Register Description

4.3.1 DMA Register Map

Table 4-4 lists the µDMA channel control structures and registers. The channel control structure shows the layout of one entry in the channel control table. The channel control table is located in system memory, and the location is determined by the application; thus, the base address is n/a (not applicable) and noted as so above the register descriptions. In Table 4-4, the offset for the channel control structures is the offset from the entry in the channel control table. See Table 4-1 for a description of how the entries in the channel control table are located in memory. The µDMA register addresses are given as a hexadecimal increment, relative to the µDMA base address of 0x400F.F000. Note that the µDMA module clock must be enabled before the registers can be programmed. There must be a delay of three system clocks after the µDMA module clock is enabled before any µDMA module registers are accessed.

Table 4-4. µDMA Register Map

Offset	Name	Type	Reset	Description
µDMA Channel Control Structure (Offset from Channel Control Table Base)				
0x000	DMA_SRCENDP	R/W	-	DMA Channel Source Address End Pointer
0x004	DMA_DSTENDP	R/W	-	DMA Channel Destination Address End
				Pointer
0x008	DMA_CHCTL	R/W	-	DMA Channel Control Word
µDMA Registers (Offset from µDMA Base Address)				
0x000	DMA_STAT	RO	0x001F.0000	
0x004	DMA_CFG	WO	-	DMA Configuration
0x008	DMA_CTLBASE	R	0x0000.0000	DMA Channel Control Base Pointer
0x00C	DMA_ALTBASE	RO	0x0000.0200	DMA Alternate Channel Control Base
				Pointer
0x010	DMA_WAITSTAT	RO	0x03C3.CF00	DMA Channel Wait-on-Request Status
0x014	DMA_SWREQ	WO	-	DMA Channel Software Request
0x018	DMA_USEBURSTSET	R/W	0x0000.0000	DMA Channel Useburst Set
0x01C	DMA_USEBURSTCLR	WO	-	DMA Channel Useburst Clear
0x020	DMA_REQMASKSET	R/W	0x0000.0000	DMA Channel Request Mask Set
0x024	DMA_REQMASKCLR	WO	-	DMA Channel Request Mask Clear
0x028	DMA_ENASET	R/W	0x0000.0000	DMA Channel Enable Set
0x02C	DMA_ENACLR	WO	-	DMA Channel Enable Clear
0x030	DMA_ALTSET	R/W	0x0000.0000	DMA Channel Primary Alternate Set
0x034	DMA_ALTCLR	WO	-	DMA Channel Primary Alternate Clear
0x038	DMA_PRIOSET	R/W	0x0000.0000	DMA Channel Priority Set
0x03C	DMA_PRIOCLR	WO	-	DMA Channel Priority Clear
0x04C	DMA_ERRCLR	R/W	0x0000.0000	DMA Bus Error Clear

Copyright © 2017, Texas Instruments Incorporated

Table 4-4. µDMA Register Map (continued)

Offset	Name	Type	Reset	Description
0x500	DMA_CHASGN	R/W	0x0000.0000	DMA Channel Assignment
0x510	DMA_CHMAP0	R/W	0x0000.0000	DMA Channel Map Select 0
0x514	DMA_CHMAP1	R/W	0x0000.0000	DMA Channel Map Select 1
0x518	DMA_CHMAP2	R/W	0x0000.0000	DMA Channel Map Select 2
0x51C	DMA_CHMAP3	R/W	0x0000.0000	DMA Channel Map Select 3
0xFB0	DMA_PV	RO	0x0000.0200	DMA peripheral Version

4.3.2 µDMA Channel Control Structure

The µDMA channel control structure holds the transfer settings for a µDMA channel. Each channel has two control structures, which are located in a table in system memory. The channel control structure is one entry in the channel control table. Each channel has a primary and alternate structure. The primary control structures are located at offsets 0x0, 0x10, 0x20 and so on. The alternate control structures are located at offsets 0x200, 0x210, 0x220, and so on.

Copyright © 2017, Texas Instruments Incorporated

4.3.3 DMA Registers

Table 4-5 lists the memory-mapped registers for the DMA_(OFFSET_FROM_CHANNEL_CONTROL_TABLE_BASE). All register offset addresses not listed in Table 4-5 should be considered as reserved locations and the register contents should not be modified.

Table below lists the DMA channel control structures and registers. The channel control structure shows the layout of one entry in the channel control table. The channel control table is located in system memory, and the location is determined by the application, thus, the base address is n/a (not applicable) and noted as so above the register descriptions. In the table below, the offset for the channel control structures is the offset from the entry in the channel control table. See Channel Configuration table for description of how the entries in the channel control table are located in memory. The DMA register addresses are given as a hexadecimal increment, relative to the DMA base address of 0x400F.F000. Note that the DMA module clock must be enabled before the registers can be programmed. There must be a delay of 3 system clocks after the DMA module clock is enabled before any DMA module registers are accessed. The DMA Channel Control Structure holds the transfer settings for a DMA channel. Each channel has two control structures, which are located in a table in system memory. The channel control structure is one entry in the channel control table. Each channel has a primary and alternate structure. The primary control structures are located at offsets 0x0, 0x10, 0x20 and so on. The alternate control structures are located at offsets 0x200, 0x210, 0x220, and so on.

Table 4-5. DMA Registers

Offset	Acronym	Register Name	Section
0h	DMA_SRCENDP	DMA Channel Source Address End Pointer	Section 4.3.3.1
4h	DMA_DSTENDP	DMA Channel Destination Address End Pointer	Section 4.3.3.2
8h	DMA_CHCTL	DMA Channel Control Word	Section 4.3.3.3

Copyright © 2017, Texas Instruments Incorporated

4.3.3.1 DMA_SRCENDP Register (offset = 0h) [reset = 0h]

DMA_SRCENDP is shown in Figure 4-5 and described in Table 4-6.

Figure 4-5. DMA_SRCENDP Register

31	30	29	28	27	26	25	24	23	22	21	20	19	18	17	16	15	14	13	12	11	10	9	8	7	6	5	4	3	2	1	0
ADDR																															
R/W-0h																															

LEGEND: R/W = Read/Write; R = Read only; W1toCl = Write 1 to clear bit; *-n* = value after reset

Table 4-6. DMA_SRCENDP Register Field Descriptions

Bit	Field	Type	Reset	Description
31-0	ADDR	R/W	0h	Source Address End Pointer. This field points to the last address of the DMA transfer source (inclusive). If the source address is not incrementing (the SRCINC field in the DMACHCTL register is 0x3), then this field points at the source location itself (such as a peripheral data register).

Copyright © 2017, Texas Instruments Incorporated

4.3.3.2 DMA_DSTENDP Register (offset = 4h) [reset = 0h]

DMA_DSTENDP is shown in Figure 4-6 and described in Table 4-7.

Figure 4-6. DMA_DSTENDP Register

31	30	29	28	27	26	25	24	23	22	21	20	19	18	17	16	15	14	13	12	11	10	9	8	7	6	5	4	3	2	1	0
ADDR																															
R/W-0h																															

LEGEND: R/W = Read/Write; R = Read only; W1toCl = Write 1 to clear bit; -*n* = value after reset

Table 4-7. DMA_DSTENDP Register Field Descriptions

Bit	Field	Type	Reset	Description
31-0	ADDR	R/W	0h	Destination Address End Pointer. This field points to the last address of the DMA transfer destination (inclusive). If the destination address is not incrementing (the DSTINC field in the DMACHCTL register is 0x3), then this field points at the source location itself (such as a peripheral data register).

Copyright © 2017, Texas Instruments Incorporated

4.3.3.3 DMA_CHCTL Register (offset = 8h) [reset = 0h]

DMA_CHCTL is shown in Figure 4-7 and described in Table 4-8.

Figure 4-7. DMA_CHCTL Register

31	30	29	28	27	26	25	24
DSTINC		DSTSIZE		SRCINC		SRCSIZE	
R/W-0h		R/W-0h		R/W-0h		R/W-0h	
23	22	21	20	19	18	17	16
RESERVED						ARBSIZE	
R-0h						R/W-0h	
15	14	13	12	11	10	9	8
ARBSIZE		XFERSIZE					
R/W-0h		R/W-0h					
7	6	5	4	3	2	1	0
XFERSIZE				NXTUSEBURST	XFERMODE		
R/W-0h				R/W-0h	R/W-0h		

LEGEND: R/W = Read/Write; R = Read only; W1toCl = Write 1 to clear bit; -*n* = value after reset

Table 4-8. DMA_CHCTL Register Field Descriptions

Bit	Field	Type	Reset	Description
31-30	DSTINC	R/W	0h	Destination Address Increment. This field configures the destination address increment. The address increment value must be equal or greater than the value of the destination size (DSTSIZE) 0h = Increment by 8-bit location 1h = Half word Increment by 16-bit location 2h = Word Increment by 32-bit location 3h = No increment Address remains set to the value of the Destination Address End Pointer (DMADSTENDP) for the channel
29-28	DSTSIZE	R/W	0h	Destination Data Size. This field configures the destination item data size. Note: DSTSIZE must be the same as SRCSIZE 0h = Increment by 8-bit location 1h = Half word Increment by 16-bit location 2h = Word Increment by 32-bit location 3h = No increment Address remains set to the value of the Destination Address End Pointer (DMADSTENDP) for the channel
27-26	SRCINC	R/W	0h	Source Address Increment. This field configures the destination address increment. The address increment value must be equal or greater than the value of the source size (SRCSIZE) 0h = Increment by 8-bit location 1h = Half word Increment by 16-bit location 2h = Word Increment by 32-bit location 3h = No increment Address remains set to the value of the source Address End Pointer (DMADSTENDP) for the channel
25-24	SRCSIZE	R/W	0h	Source Data Size. This field configures the source item data size. Note: DSTSIZE must be the same as SRCSIZE 0h = Increment by 8-bit location 1h = Half word Increment by 16-bit location 2h = Word Increment by 32-bit location 3h = No increment Address remains set to the value of the Destination Address End Pointer (DMADSTENDP) for the channel
23-18	RESERVED	R	0h	

Copyright © 2017, Texas Instruments Incorporated

Table 4-8. DMA_CHCTL Register Field Descriptions (continued)

Bit	Field	Type	Reset	Description
17-14	ARBSIZE	R/W	0h	This field configures the number of transfers that can occur before the DMA controller re-arbitrates. The possible arbitration rate configurations represent powers of 2 and are shown below. 0xA-0xF = 1024 transfer 0h = 1 transfer 1h = 2 transfer 2h = 4 transfer 3h = 8 transfer 4h = 16 transfer 5h = 32 transfer 6h = 64 transfer 7h = 128 transfer 8h = 256 transfer
13-4	XFERSIZE	R/W	0h	Transfer Size (minus 1). This field configures the total number of items to transfer. The value of this field is 1 less than the number to transfer (value 0 means transfer 1 item). The maximum value for this 10-bit field is 1023 which represents a transfer size of 1024 items. The transfer size is the number of items, not the number of bytes. If the data size is 32 bits, then this value is the number of 32-bit words to transfer. The DMA controller updates this field immediately prior to entering the arbitration process, so it contains the number of outstanding items that is necessary to complete the DMA cycle
3	NXTUSEBURST	R/W	0h	Next Useburst. This field controls whether the Useburst SET[n] bit is automatically set for the last transfer of a peripheral scatter gather operation. Normally, for the last transfer, if the number of remaining items to transfer is less than the arbitration size, the DMA controller uses single transfers to complete the transaction. If this bit is set, then the controller uses a burst transfer to complete the last transfer.
2-0	XFERMODE	R/W	0h	DMA Transfer Mode. This field configures the operating mode of the DMA cycle. Because this register is in system RAM, it has no reset value. Therefore, this field should be initialized to 0 before the channel is enabled. 0h = Stop 1h = Basic 2h = Auto-request 3h = Ping-pong 4h = Memory Scatter-Gather 5h = Alternate memory scatter gather 6h = Peripheral scatter gather 7h = Alternate peripheral scatter gather

Copyright © 2017, Texas Instruments Incorporated

General-Purpose Input/Outputs (GPIOs)

Topic **Page**

5.1 Overview **132**
5.2 Functional Description **132**
5.3 Interrupt Control **134**
5.4 Initialization and Configuration **134**
5.5 GPIO Registers **136**

Copyright © 2017, Texas Instruments Incorporated

5.1 Overview

This chapter describes the general purpose input/output module and the I/O pad cells in the CC32xx.

The GPIO module is composed of 4 physical GPIO blocks, each corresponding to an individual GPIO port (Port 0, Port A1, Port A2, Port A3). The GPIO module supports up to 32 programmable input/output pins when GPIO function is selected in I/O pin muxing.

The GPIO module has the following features:

- Up to 26 GPIOs depending on pin mux configuration, excluding the two SWD pins (TMS, TCK) and the two pins dedicated for antenna switch control (diversity selection):
  - 2-wire debug corresponds to the SOP mode (sense-on-power).
  - If 4-wire JTAG mode is used instead (by pulling the sense on power pin 2:0 to 000 using board-level pull-down resistors), then the number of digital I/Os, excluding JTAG and antenna diversity controls, is 24.
- Programmable control for GPIO interrupts:
  - Interrupt generation masking
  - Edge-triggered on rising, falling, or both
  - Level-sensitive on High or Low values

5.2 Functional Description

Each GPIO port is a separate hardware instance of the same physical block. The CC32xx microcontroller contains four ports and thus four of these physical GPIO blocks. Each GPIO block has 8 bits. The available GPIOs are a subset of these 32 GPIO signals. For details on the usable GPIOs, refer to Table 16-6.

Figure 5-1. Digital I/O Pads

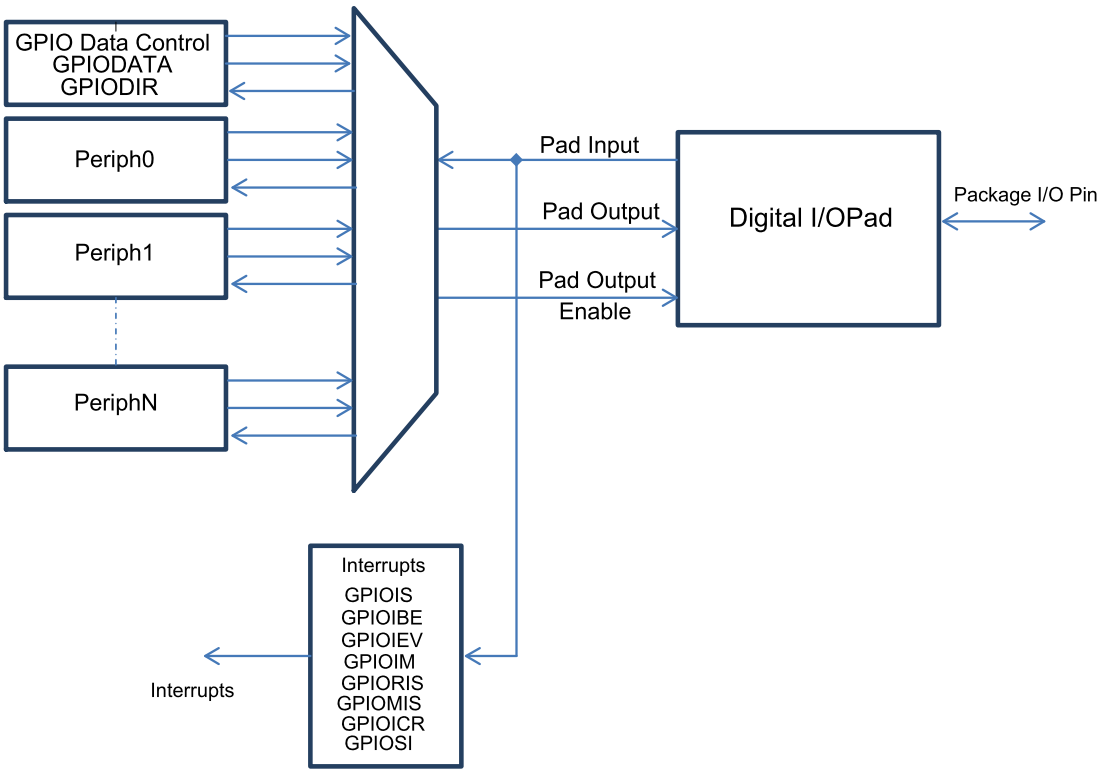

Copyright © 2017, Texas Instruments Incorporated

5.2.1 Data Control

The data direction register GPIODIR configures the GPIO as an input or an output, while the data register GPIODATA either captures incoming data or drives it out to the pads.

5.2.1.1 Data Direction Operation

The GPIO Direction (GPIODIR) register configures each individual pin as an input or output. When the data direction bit is cleared, the GPIO is configured as an input, and the corresponding data register bit captures and stores the value on the GPIO port. When the data direction bit is set, the GPIO is configured as an output, and the corresponding data register bit is driven out on the GPIO port.

5.2.1.2 Data Register Operation

To aid in the efficiency of software, the GPIO ports allow for the modification of individual bits in the GPIO Data (GPIODATA) register by using bits [9:2] of the address bus as a mask. In this manner, software drivers can modify individual GPIO pins in a single instruction without affecting the state of the other pins. This method is more efficient than the conventional method of performing a read-modify-write operation to set or clear an individual GPIO pin. To implement this feature, the GPIODATA register covers 256 locations in the memory map.

During a write, if the address bit associated with that data bit is set, the value of the GPIODATA register is altered. If the address bit is cleared, the data bit is left unchanged. For example, writing a value of 0xEB to the address GPIODATA + 0x098 has the results shown in Figure 5-2, where u indicates that data is unchanged by the write. This example demonstrates how GPIODATA bits 5, 2, and 1 are written with a single operation by using GPIODATA address alias 0x098 (offset address with regards to the base of the respective GPIO instance A0 to A4).

Figure 5-2. GPIODATA Write Example

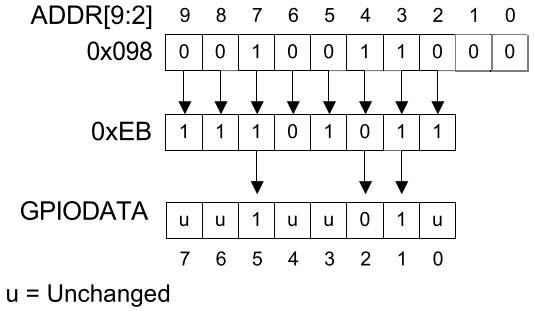

During a read, if the address bit associated with the data bit is set, the value is read. If the address bit associated with the data bit is cleared, the data bit is read as a zero, regardless of its actual value. For example, reading address GPIODATA + 0x0C4 yields as shown in Figure 5-3. This example shows how to read GPIODATA bits 5, 4, and 0 with a single operation by using GPIODATA address alias 0x0C4 (offset address with regard to the base of the respective GPIO instance S0 to S4).

Figure 5-3. GPIODATA Read Example

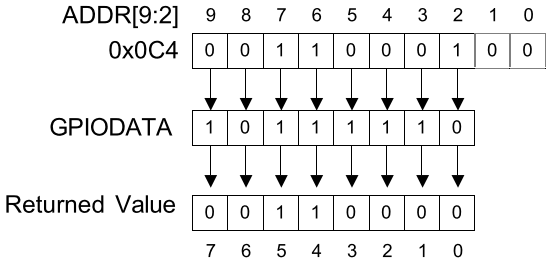

Copyright © 2017, Texas Instruments Incorporated

5.3 Interrupt Control

The interrupt capabilities of each GPIO port are controlled by a set of seven registers (refer to Section 5.5). These registers select the source of the interrupt, its polarity, and the edge properties. When one or more GPIO inputs cause an interrupt, a single interrupt output is sent to the interrupt controller for the entire GPIO port.

Three registers define the edge or sense that causes interrupts:

- GPIO Interrupt Sense (GPIOIS) register
- GPIO Interrupt Both Edges (GPIOIBE) register
- GPIO Interrupt Event (GPIOIEV) register

Interrupts are enabled or disabled through the GPIO Interrupt Mask (GPIOIM) register.

When an interrupt condition occurs, the state of the interrupt signal can be viewed in two locations: the GPIO Raw Interrupt Status (GPIORIS) and GPIO Masked Interrupt Status (GPIOMIS) registers. As the name implies, the GPIOMIS register only shows interrupt conditions that are allowed to be passed to the interrupt controller. The GPIORIS register indicates that a GPIO pin meets the conditions for an interrupt, but has not necessarily been sent to the interrupt controller.

For a GPIO level-detect interrupt, the interrupt signal generating the interrupt must be held until serviced. Once the input signal de-asserts from the interrupt generating logical sense, the corresponding RIS bit in the GPIORIS register clears. For a GPIO edge-detect interrupt, the RIS bit in the GPIORIS register is cleared by writing a 1 to the corresponding bit in the GPIO Interrupt Clear (GPIOICR) register. The corresponding GPIOMIS bit reflects the masked value of the RIS bit.

When programming the interrupt control registers (GPIOIS, GPIOIBE, or GPIOIEV), the interrupts should be masked (GPIOIM cleared). Writing any value to an interrupt control register can generate a spurious interrupt if the corresponding bits are enabled.

5.3.1 µDMA Trigger Source

Any GPIO pin can be configured as an external trigger for the µDMA, using the Apps Gpio Trigger Enable (APPS_GPIO_TRIG_EN) register. If the µDMA is configured to start a transfer based on the GPIO signal, a transfer is initiated.

5.4 Initialization and Configuration

To configure the GPIO pins of a particular port:

1. Enable the clock to the port by setting the appropriate bits in the GPIO0CLKEN, GPIO1CLKEN, GPIO2CLKEN, GPIO3CLKEN, and GPIO4CLKEN registers.
2. Set the direction of the GPIO port pins by programming the GPIODIR register. A write of a 1 indicates output, and a write of a 0 indicates input.
3. Configure the GPIO_PAD_CONFIG_# register to program each bit as a GPIO or other peripheral function. The GPIODMACTL register can program a GPIO pin as a µDMA trigger.
4. Program the GPIOIS, GPIOIBE, GPIOEV, and GPIOIM registers to configure the type, event, and mask of the interrupts for each port. **Note**: To prevent false interrupts, the following steps should be taken when re-configuring GPIO edge and interrupt sense registers:

   (a) Mask the corresponding port by clearing the IME field in the GPIOIM register.

   (b) Configure the IS field in the GPIOIS register and the IBE field in the GPIOIBE register.

   (c) Clear the GPIORIS register.

   (d) Unmask the port by setting the IME field in the GPIOIM register.

Table 5-1. GPIO Pad Configuration Examples

Configuration	GPIO Register Bit Value
	DIR
Digital Input (GPIO)	0
Digital Output (GPIO)	1

Copyright © 2017, Texas Instruments Incorporated

Use the DATA register to drive required value on GPIO pin (When DIR = 1) or to read value on GPIO pin (when DIR = 0).

Table 5-2. GPIO Interrupt Configuration Example

Register	Desired Interrupt Event Trigger	Pin 2 Bit Value							
		7	6	5	4	3	2	1	0
GPIOIS	0=edge 1=level	X	X	X	X	X	0	X	X
GPIOIBE	0=single edge 1=both edges	X	X	X	X	X	0	X	X
GPIOIEV	0=Low level, or falling edge 1=High level, or rising edge	X	X	X	X	X	1	X	X
GPIOIM	0=masked 1=not masked	0	0	0	0	0	1	0	0

Copyright © 2017, Texas Instruments Incorporated

5.5 GPIO Registers

Table 5-3 lists the GPIO memory-mapped registers. Each GPIO port can be accessed through the advanced peripheral bus (APB). The offset listed is a hexadecimal increment to the register address, relative to the base address of that GPIO port:

- GPIO Port A0: 0x4000.4000
- GPIO Port A1: 0x4000.5000
- GPIO Port A2: 0x4000.6000
- GPIO Port A3: 0x4000.7000

Each GPIO module clock must be enabled before the registers can be programmed. There must be a delay of 3 system clocks after the GPIO module clock is enabled before any GPIO module registers are accessed.

Table 5-3. GPIO Registers

Offset	Acronym	Register Name	Section
0h	GPIODATA	GPIO Data	Section 5.5.1
400h	GPIODIR	GPIO Direction	Section 5.5.2
404h	GPIOIS	GPIO Interrupt Sense	Section 5.5.3
408h	GPIOIBE	GPIO Interrupt Both Edges	Section 5.5.4
40Ch	GPIOIEV	GPIO Interrupt Event	Section 5.5.5
410h	GPIOIM	GPIO Interrupt Mask	Section 5.5.6
414h	GPIORIS	GPIO Raw Interrupt Status	Section 5.5.7
418h	GPIOMIS	GPIO Masked Interrupt Status	Section 5.5.8
41Ch	GPIOICR	GPIO Interrupt Clear	Section 5.5.9

Copyright © 2017, Texas Instruments Incorporated

5.5.1 GPIODATA Register (offset = 0h) [reset = 0h]

GPIODATA is shown in Figure 5-4 and described in Table 5-4.

The GPIODATA register is the data register. In software control mode, values written in the GPIODATA register are transferred onto the GPIO port pins if the respective pins have been configured as outputs through the GPIO Direction (GPIODIR) register.
The GPIODATA register has 256 aliased addresses from offset 0x000 to 0x3FF. A different address alias is used to directly read/ or write any combination of the 8 signal bits. This feature can help avoid time-consuming read-modify-writes and bit-masking operation for read-in software.
In this scheme, to write to GPIODATA, the corresponding bits in the mask, represented by the address bus bits [9:2], must be set. Otherwise, the bit values remain unchanged by the write.
Similarly, the values read from this register are determined for each bit by the mask bit derived from the alias address used to access the data register, bits [9:2]. Bits set in the address mask cause the corresponding bits in GPIODATA to be read, and bits that are clear in the address mask cause the corresponding bits in GPIODATA to be read as 0, regardless of their value.
A read from GPIODATA returns the last bit value written if the respective pins are configured as outputs, or it returns the value on the corresponding input pin when these are configured as inputs. All bits are cleared by a reset.

Figure 5-4. GPIODATA Register

31	30	29	28	27	26	25	24	23	22	21	20	19	18	17	16	15	14	13	12	11	10	9	8	7	6	5	4	3	2	1	0
RESERVED																								DATA							
R-0h																								R/W-0h							

Table 5-4. GPIODATA Register Field Descriptions

Bit	Field	Type	Reset	Description
31-8	RESERVED	R	0h	Software should not rely on the value of a reserved bit. To provide compatibility with future products, the value of a reserved bit should be preserved across a read-modify-write operation.
7-0	DATA	R/W	0h	GPIO Data This register is virtually mapped to 256 locations in the address space. To facilitate the reading and writing of data to these registers by independent drivers, the data read from and written to the registers are masked by the eight address lines [9:2]. Reads from this register return its current state. Writes to this register only affect bits that are not masked by ADDR[9:2] and are configured as outputs.

Copyright © 2017, Texas Instruments Incorporated

5.5.2 GPIODIR Register (offset = 400h) [reset = 0h]

GPIODIR is shown in Figure 5-5 and described in Table 5-5.

The GPIODIR register is the data direction register. Setting a bit in the GPIODIR register configures the corresponding pin to be an output, while clearing a bit configures the corresponding pin to be an input. All bits are cleared by a reset, meaning all GPIO pins are inputs by default.

Figure 5-5. GPIODIR Register

31	30	29	28	27	26	25	24	23	22	21	20	19	18	17	16	15	14	13	12	11	10	9	8	7	6	5	4	3	2	1	0
RESERVED																								DIR							
R-0h																								R/W-0h							

Table 5-5. GPIODIR Register Field Descriptions

Bit	Field	Type	Reset	Description
31-8	RESERVED	R	0h	
7-0	DIR	R/W	0h	GPIO Data Direction 0h = Corresponding pin is an input. 1h = Corresponding pins is an output.

Copyright © 2017, Texas Instruments Incorporated

5.5.3 GPIOIS Register (offset = 404h) [reset = 0h]

GPIOIS is shown in Figure 5-6 and described in Table 5-6.

The GPIOIS register is the interrupt sense register. Setting a bit in the GPIOIS register configures the corresponding pin to detect levels, while clearing a bit configures the corresponding pin to detect edges. All bits are cleared by a reset.
To prevent false interrupts, the following steps should be taken when re-configuring GPIO edge and interrupt sense registers:

1. Mask the corresponding port by clearing the IME field in the GPIOIM register.
2. Configure the IS field in the GPIOIS register and the IBE field in the GPIOIBE register.
3. Clear the GPIORIS register.
4. Unmask the port by setting the IME field in the GPIOIM register.

Figure 5-6. GPIOIS Register

31	30	29	28	27	26	25	24	23	22	21	20	19	18	17	16	15	14	13	12	11	10	9	8	7	6	5	4	3	2	1	0
RESERVED																								IS							
R-0h																								R/W-0h							

Table 5-6. GPIOIS Register Field Descriptions

Bit	Field	Type	Reset	Description
31-8	RESERVED	R	0h	
7-0	IS	R/W	0h	GPIO Interrupt Sense 0h = The edge on the corresponding pin is detected (edge-sensitive). 1h = The level on the corresponding pin is detected (level-sensitive).

Copyright © 2017, Texas Instruments Incorporated

5.5.4 GPIOIBE Register (offset = 408h) [reset = 0h]

GPIOIBE is shown in Figure 5-7 and described in Table 5-7.

The GPIOIBE register allows both edges to cause interrupts. When the corresponding bit in the GPIO Interrupt Sense (GPIOIS) register is set to detect edges, setting a bit in the GPIOIBE register configures the corresponding pin to detect both rising and falling edges, regardless of the corresponding bit in the GPIO Interrupt Event (GPIOIEV) register. Clearing a bit configures the pin to be controlled by the GPIOIEV register. All bits are cleared by a reset.
To prevent false interrupts, the following steps should be taken when re-configuring GPIO edge and interrupt sense registers:

1. Mask the corresponding port by clearing the IME field in the GPIOIM register.
2. Configure the IS field in the GPIOIS register and the IBE field in the GPIOIBE register.
3. Clear the GPIORIS register.
4. Unmask the port by setting the IME field in the GPIOIM register.

Figure 5-7. GPIOIBE Register

31	30	29	28	27	26	25	24	23	22	21	20	19	18	17	16	15	14	13	12	11	10	9	8	7	6	5	4	3	2	1	0
RESERVED																								IBE							
R-0h																								R/W-0h							

Table 5-7. GPIOIBE Register Field Descriptions

Bit	Field	Type	Reset	Description
31-8	RESERVED	R	0h	
7-0	IBE	R/W	0h	GPIO Interrupt Both Edges 0h = Interrupt generation is controlled by the GPIO Interrupt Event (GPIOIEV) register. 1h = Both edges on the corresponding pin trigger an interrupt.

Copyright © 2017, Texas Instruments Incorporated

5.5.5 GPIOIEV Register (offset = 40Ch) [reset = 0h]

GPIOIEV is shown in Figure 5-8 and described in Table 5-8.

The GPIOIEV register is the interrupt event register. Setting a bit in the GPIOIEV register configures the corresponding pin to detect rising edges or high levels, depending on the corresponding bit value in the GPIO Interrupt Sense (GPIOIS) register. Clearing a bit configures the pin to detect falling edges or low levels, depending on the corresponding bit value in the GPIOIS register. All bits are cleared by a reset.

Figure 5-8. GPIOIEV Register

31	30	29	28	27	26	25	24	23	22	21	20	19	18	17	16	15	14	13	12	11	10	9	8	7	6	5	4	3	2	1	0
RESERVED																								IEV							
R-0h																								R/W-0h							

Table 5-8. GPIOIEV Register Field Descriptions

Bit	Field	Type	Reset	Description
31-8	RESERVED	R	0h	
7-0	IEV	R/W	0h	GPIO Interrupt Event 0h = A falling edge or a Low level on the corresponding pin triggers an interrupt. 1h = A rising edge or a High level on the corresponding pin triggers an interrupt.

Copyright © 2017, Texas Instruments Incorporated

5.5.6 GPIOIM Register (offset = 410h) [reset = 0h]

GPIOIM is shown in Figure 5-9 and described in Table 5-9.

The GPIOIM register is the interrupt mask register. Setting a bit in the GPIOIM register allows interrupts generated by the corresponding pin to be sent to the interrupt controller on the combined interrupt signal. Clearing a bit prevents an interrupt on the corresponding pin from being sent to the interrupt controller. All bits are cleared by a reset.

Figure 5-9. GPIOIM Register

31	30	29	28	27	26	25	24	23	22	21	20	19	18	17	16	15	14	13	12	11	10	9	8	7	6	5	4	3	2	1	0
RESERVED																								IME							
R-0h																								R/W-0h							

Table 5-9. GPIOIM Register Field Descriptions

Bit	Field	Type	Reset	Description
31-8	RESERVED	R	0h	
7-0	IME	R/W	0h	GPIO Interrupt Mask Enable 0h = The interrupt from the corresponding pin is masked. 1h = The interrupt from the corresponding pin is sent to the interrupt controller.

Copyright © 2017, Texas Instruments Incorporated

5.5.7 GPIORIS Register (offset = 414h) [reset = 0h]

GPIORIS is shown in Figure 5-10 and described in Table 5-10.

The GPIORIS register is the raw interrupt status register. A bit in this register is set when an interrupt condition occurs on the corresponding GPIO pin. If the corresponding bit in the GPIO Interrupt Mask (GPIOIM) register is set, the interrupt is sent to the interrupt controller. Bits read as zero indicate that corresponding input pins have not initiated an interrupt. For a GPIO level-detect interrupt, the interrupt signal generating the interrupt must be held until serviced. Once the input signal de-asserts from the interrupt generating logical sense, the corresponding RIS bit in the GPIORIS register clears. For a GPIO edge-detect interrupt, the RIS bit in the GPIORIS register is cleared by writing a 1 to the corresponding bit in the GPIO Interrupt Clear (GPIOICR) register. The corresponding GPIOMIS bit reflects the masked value of the RIS bit.

Figure 5-10. GPIORIS Register

31	30	29	28	27	26	25	24	23	22	21	20	19	18	17	16	15	14	13	12	11	10	9	8	7	6	5	4	3	2	1	0
RESERVED																								RIS							
R-0h																								R-0h							

Table 5-10. GPIORIS Register Field Descriptions

Bit	Field	Type	Reset	Description
31-8	RESERVED	R	0h	
7-0	RIS	R	0h	GPIO Interrupt Raw Status For edge-detect interrupts, this bit is cleared by writing a 1 to the corresponding bit in the GPIOICR register. For a GPIO level-detect interrupt, the bit is cleared when the level is deasserted. 0h = An interrupt condition has not occurred on the corresponding pin. 1h = An interrupt condition has occurred on the corresponding pin.

Copyright © 2017, Texas Instruments Incorporated

5.5.8 GPIOMIS Register (offset = 418h) [reset = 0h]

GPIOMIS is shown in Figure 5-11 and described in Table 5-11.

The GPIOMIS register is the masked interrupt status register. If a bit is set in this register, the corresponding interrupt has triggered an interrupt to the interrupt controller. If a bit is clear, either no interrupt has been generated, or the interrupt is masked.
GPIOMIS is the state of the interrupt after masking.

Figure 5-11. GPIOMIS Register

31	30	29	28	27	26	25	24	23	22	21	20	19	18	17	16	15	14	13	12	11	10	9	8	7	6	5	4	3	2	1	0
RESERVED																								MIS							
R-0h																								R-0h							

Table 5-11. GPIOMIS Register Field Descriptions

Bit	Field	Type	Reset	Description
31-8	RESERVED	R	0h	
7-0	MIS	R	0h	GPIO Masked Interrupt Status For edge-detect interrupts, this bit is cleared by writing a 1 to the corresponding bit in the GPIOICR register. For a GPIO level-detect interrupt, the bit is cleared when the level is deasserted. 0h = An interrupt condition on the corresponding pin is masked or has not occurred. 1h = An interrupt condition on the corresponding pin has triggered an interrupt to the interrupt controller.

Copyright © 2017, Texas Instruments Incorporated

5.5.9 GPIOICR Register (offset = 41Ch) [reset = 0h]

GPIOICR is shown in Figure 5-12 and described in Table 5-12.

The GPIOICR register is the interrupt clear register. For edge-detect interrupts, writing a 1 to the IC bit in the GPIORIS and GPIOMIS registers. If the interrupt is a level-detect, the IC bit in this register has no effect. In addition, writing a 0 to any of the bits in the GPIOICR register has no effect.

Figure 5-12. GPIOICR Register

31	30	29	28	27	26	25	24	23	22	21	20	19	18	17	16	15	14	13	12	11	10	9	8	7	6	5	4	3	2	1	0
RESERVED																								IC							
R-0h																								W1C-0h							

Table 5-12. GPIOICR Register Field Descriptions

Bit	Field	Type	Reset	Description
31-8	RESERVED	R	0h	
7-0	IC	W1C	0h	GPIO Interrupt Clear 0h = The corresponding interrupt is unaffected. 1h = The corresponding interrupt is cleared.

Copyright © 2017, Texas Instruments Incorporated

5.5.10 GPIO_TRIG_EN Register

Register Outside GPIO Module : GPIO Trigger Enable (GPIO_TRIG_EN): This register configures a GPIO pin as a source for the DMA trigger. Setting a bit in the GPIO_TRIG_EN register allows to trigger DMA upon any pin toggle correspond that GPIO module.

Physical Address: 0x400F 70C8.

Table 5-13. GPIO_TRIG_EN Register Field Descriptions

Bit	Field	Type	Reset	Description
31-4	RESERVED	R	0h	
3-0	TRIG	R/W	0h	GPIO DMA Trigger Enable. Bit 0: when 1, enable GPIO 0 trigger. This bit enables trigger for all GPIO 0 pins (GPIO 0 to GPIO7). Bit 1: when 1, enable GPIO 1 trigger. This bit enables trigger for all GPIO 1 pins (GPIO8 to GPIO15). Bit 2: when 1, enable GPIO 2 trigger. This bit enables trigger for all GPIO 2 pins (GPIO16 to GPIO23). Bit 3: when 1, enable GPIO 3 trigger. This bit enables trigger for all GPIO 3 pins (GPIO24 to GPIO31).

Table 5-14. GPIO Mapping

GPIO Module Instance	GPIO Bit	GPIO #
GPIOA0	0	GPIO_00 (PM/Dig Mux)
GPIOA0	1	GPIO_01
GPIOA0	2	GPIO_02 (Dig/ADC Mux)
GPIOA0	3	GPIO_03 (Dig/ADC Mux)
GPIOA0	4	GPIO_04 (Dig/ADC Mux)
GPIOA0	5	GPIO_05 (Dig/ADC Mux)
GPIOA0	6	GPIO_06
GPIOA0	7	GPIO_07
GPIOA1	0	GPIO_08
GPIOA1	1	GPIO_09
GPIOA1	2	GPIO_10
GPIOA1	3	GPIO_11
GPIOA1	4	GPIO_12
GPIOA1	5	GPIO_13
GPIOA1	6	GPIO_14
GPIOA1	7	GPIO_15
GPIOA2	0	GPIO_16
GPIOA2	1	GPIO_17
GPIOA2	2	GPIO_18 (Reserved)
GPIOA2	3	GPIO_19 (Reserved)
GPIOA2	4	GPIO_20 (Reserved)
GPIOA2	5	GPIO_21 (Reserved)
GPIOA2	6	GPIO_22
GPIOA2	7	GPIO_23
GPIOA3	0	GPIO_24
GPIOA3	1	GPIO_25
GPIOA3	2	GPIO_26 (Restricted Use; Antenna Selection 1 Only)
GPIOA3	3	GPIO_27 (Restricted Use; Antenna Selection 2 Only)
GPIOA3	4	GPIO_28

Copyright © 2017, Texas Instruments Incorporated

Table 5-14. GPIO Mapping (continued)

GPIO Module Instance	GPIO Bit	GPIO #
GPIOA3	5	GPIO_29
GPIOA3	6	GPIO_30 (PM/Dig Mux)
GPIOA3	7	GPIO_31 (PM/Dig Mux)

Copyright © 2017, Texas Instruments Incorporated

Universal Asynchronous Receivers/Transmitters (UARTs)

Topic **Page**

6.1 Overview **149**
6.2 Functional Description **150**
6.3 UART Registers **156**

Copyright © 2017, Texas Instruments Incorporated

6.1 Overview

The CC32xx includes two Universal Asynchronous Receivers/Transmitters (UART) with the following features:

- Programmable baud-rate generator allowing speeds up to 3 Mbps.
- Separate 16×8 transmit (TX) and receive (RX) FIFOs to reduce CPU interrupt service loading
- Programmable FIFO length, including 1-byte deep operation providing conventional double-buffered interface
- FIFO trigger levels of 1/8, 1/4, 1/2, 3/4, and 7/8
- Standard asynchronous communication bits for start, stop, and parity
- Line-break generation and detection
- Fully programmable serial interface characteristics
  - 5, 6, 7, or 8 data bits
  - Even, odd, stick, or no-parity bit generation and detection
  - 1 or 2 stop bit generation
- RTS and CTS hardware flow support
- Standard FIFO-level and end-of-transmission interrupts
- Efficient transfers using micro-direct memory access controller (μDMA)
  - Separate channels for transmit and receive
  - Receive single request asserted when data is in the FIFO; burst request asserted at programmed FIFO level
  - Transmit single request asserted when there is space in the FIFO; burst request asserted at programmed FIFO level
- System clock generates the baud clock.

Copyright © 2017, Texas Instruments Incorporated

6.1.1 Block Diagram

Figure 6-1. UART Module Block Diagram

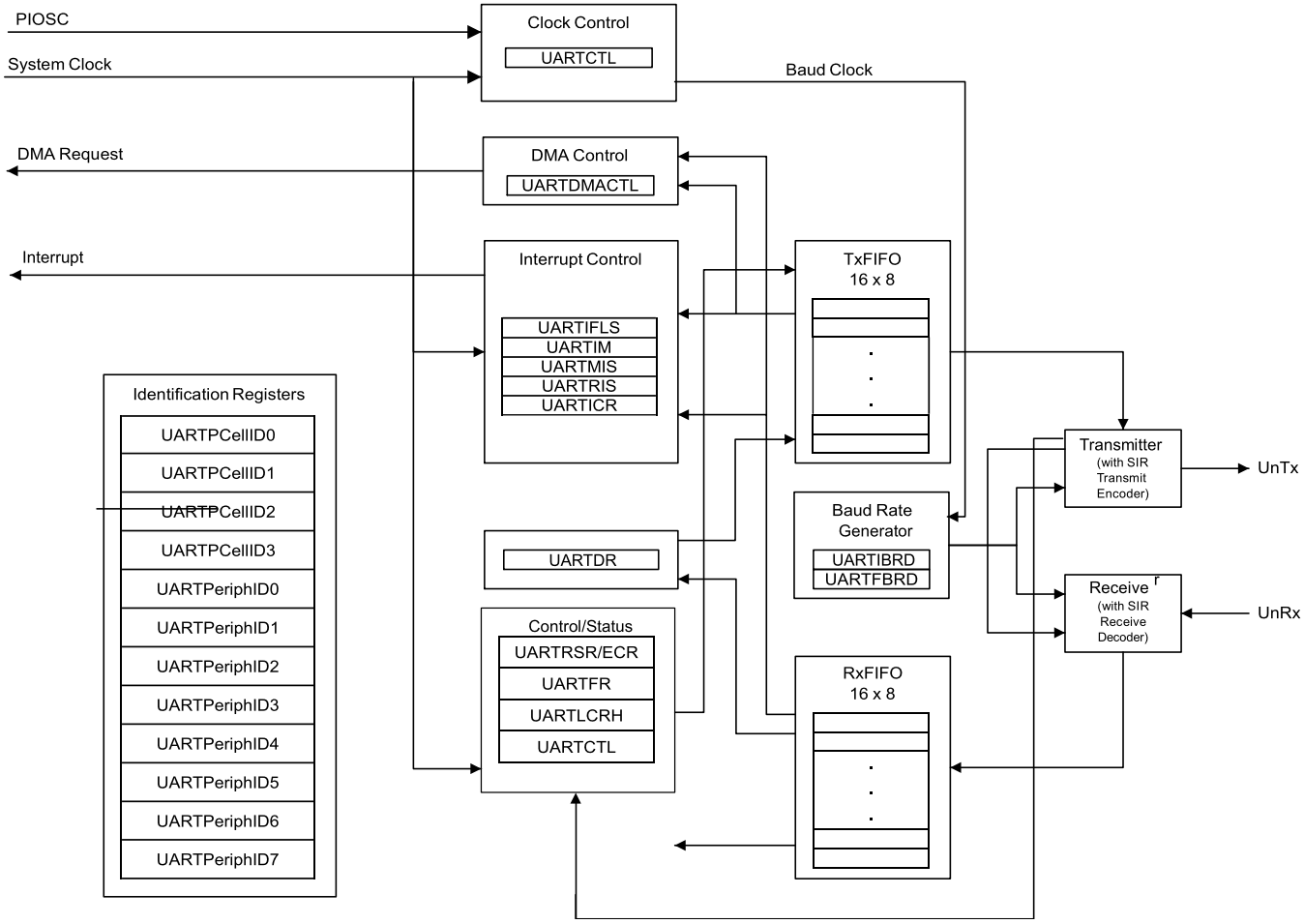

6.2 Functional Description

Each CC32xx UART performs the functions of parallel-to-serial and serial-to-parallel conversions.

The UART is configured for transmit and receive through the TXE and RXE bits of the UART Control (UARTCTL) register. Transmit and receive are both enabled out of reset. Before any control registers are programmed, the UART must be disabled by clearing the UARTEN bit in the UARTCTL register. If the UART is disabled during a TX or RX operation, the current transaction is completed prior to the UART stopping.

6.2.1 Transmit/Receive Logic

The transmit logic performs parallel-to-serial conversion on the data read from the transmit FIFO. The control logic outputs the serial bit stream, beginning with a start bit and followed by the data bits (LSB first), parity bit, and the stop bits according to the programmed configuration in the control registers. See Figure 6-2 for details.

The receive logic performs serial-to-parallel conversion on the received bit stream after a valid start pulse has been detected. Overrun, parity, frame error checking, and line-break detection are also performed, and their status accompanies the data written to the receive FIFO.

Copyright © 2017, Texas Instruments Incorporated

Figure 6-2. UART Character Frame

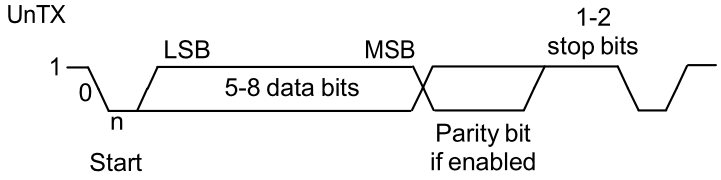

6.2.2 Baud-Rate Generation

The baud-rate divisor is a 22-bit number consisting of a 16-bit integer and a 6-bit fractional part. The number formed by these two values is used by the baud-rate generator to determine the bit period. Having a fractional baud-rate divisor allows the UART to generate all the standard baud rates.

The 16-bit integer is loaded through the UART Integer Baud-Rate Divisor (UARTIBRD) register and the 6-bit fractional part is loaded with the UART Fractional Baud-Rate Divisor (UARTFBRD) register . The baud-rate divisor (BRD) has the following relationship to the system clock (where BRDI is the integer part of the BRD and BRDF is the fractional part, separated by a decimal place.)

*BRD = BRDI + BRDF = UARTSysClk / (ClkDiv * Baud Rate)*

where UARTSysClk is the system clock connected to the UART, and ClkDiv is either 16 (if HSE in UARTCTL is clear) or 8 (if HSE is set). By default, this is the main system clock described in Section 15.3.5.

The 6-bit fractional number (loaded into the DIVFRAC bit field in the UARTFBRD register) can be calculated by taking the fractional part of the baud-rate divisor, multiplying it by 64, and adding 0.5 to account for rounding errors:

*UARTFBRD[DIVFRAC] = integer(BRDF * 64 + 0.5)*

The UART generates an internal baud-rate reference clock at 8× or 16× the baud-rate (referred to as Baud8 and Baud16, depending on the setting of the HSE bit (bit 5) in UARTCTL). This reference clock is divided by 8 or 16 to generate the transmit clock, and used for error detection during receive operations.

Along with the UART Line Control, High Byte (UARTLCRH) register, the UARTIBRD and UARTFBRD registers form an internal 30-bit register. This internal register is only updated when a write operation to UARTLCRH is performed, so any changes to the baud-rate divisor must be followed by a write to the UARTLCRH register for the changes to take effect. To update the baud-rate registers, there are four possible sequences:

- UARTI BRD write, UARTF BRD write, and UARTLCRH write
- UARTF BRD write, UARTI BRD write, and UARTLCRH write
- UARTI BRD write and UARTLCRH write
- UARTF BRD write and UARTLCRH write

6.2.3 Data Transmission

Data received or transmitted is stored in two 16-byte FIFOs, though the receive FIFO has an extra four bits per character for status information. For transmission, data is written into the transmit FIFO. If the UART is enabled, it causes a data frame to start transmitting with the parameters indicated in the UARTLCRH register. Data continues to be transmitted until there is no data left in the transmit FIFO. The BUSY bit in the UART Flag (UARTFR) register is asserted when data is written to the transmit FIFO (if the FIFO is non-empty) and remains asserted while data is being transmitted. The BUSY bit is negated only when the transmit FIFO is empty, and the last character has been transmitted from the shift register, including the stop bits. The UART can indicate that it is busy even though the UART may no longer be enabled.

When the receiver is idle (the UnRx signal is continuously 1), and the data input goes low (a start bit has been received), the receive counter begins running and data is sampled on the eighth cycle of Baud16 or fourth cycle of Baud8 depending on the setting of the HSE bit (bit 5) in UARTCTL.

Copyright © 2017, Texas Instruments Incorporated

The start bit is valid and recognized if the UnRx signal is still low on the eighth cycle of Baud16 (HSE clear) or the fourth cycle of Baud8 (HSE set), otherwise it is ignored. After a valid start bit is detected, successive data bits are sampled on every 16th cycle of Baud16 or 8th cycle of Baud8 (that is, one bit period later) according to the programmed length of the data characters and value of the HSE bit in UARTCTL. The parity bit is then checked if parity mode is enabled. Data length and parity are defined in the UARTLCRH register.

Lastly, a valid stop bit is confirmed if the UnRx signal is high, otherwise a framing error has occurred. When a full word is received, the data is stored in the receive FIFO along with any error bits associated with that word.

6.2.3.1 Flow Control

Flow control can be accomplished by either hardware or software. The following sections describe the different methods.

6.2.3.1.1 Hardware Flow Control (RTS/CTS)

Hardware flow control between two devices is accomplished by connecting the $\overline{\text{U1RTS}}$ output to the clear-to-send input on the receiving device, and connecting the request-to-send output on the receiving device to the $\overline{\text{U1RTS}}$ input.

The $\overline{\text{U1RTS}}$ input controls the transmitter. The transmitter may only transmit data when the $\overline{\text{U1RTS}}$ input is asserted. The $\overline{\text{U1RTS}}$ output signal indicates the state of the receive FIFO. U1CTS remains asserted until the preprogrammed watermark level is reached, indicating that the receive FIFO has no space to store additional characters.

The UARTCTL register bits 15 (CTSEN) and 14 (RTSEN) specify the flow control mode as shown in Table 6-1.

Table 6-1. Flow Control Mode

CTSEN	RTSEN	Description
1	1	RTS and CTS flow control enabled
1	0	Only CTS flow control enabled
0	1	Only RTS Flow Control enabled
0	0	Both RTS and CTS flow control disabled

When RTSEN is 1, software cannot modify the $\overline{\text{U1RTS}}$ output value through the UARTCTL register request-to-send (RTS) bit, and the status of the RTS bit should be ignored.

6.2.3.1.2 Software Flow Control (Modem Status Interrupts)

Software flow control between two devices is accomplished by using interrupts to indicate the status of the UART. Interrupts may be generated for the $\overline{\text{U1CTS}}$ and $\overline{\text{U1RI}}$ signals using bit 1 of the UARTIM register, respectively. The raw and masked interrupt status may be checked using the UARTRIS and UARTMIS registers. These interrupts may be cleared using the UARTICR register.

6.2.3.2 FIFO Operation

The UART has two 16×8 FIFOs; one for transmit and one for receive. Both FIFOs are accessed through the UART Data (UARTDR) register. Read operations of the UARTDR register return a 12-bit value consisting of 8 data bits and 4 error flags, while write operations place 8-bit data in the transmit FIFO.

Out of reset, both FIFOs are disabled and act as 1-byte-deep holding registers. The FIFOs are enabled by setting the FEN bit in UARTLCRH.

Copyright © 2017, Texas Instruments Incorporated

FIFO status can be monitored via the UART Flag (UARTFR) register and the UART Receive Status (UARTRSR) register. Hardware monitors empty, full, and overrun conditions. The UARTFR register contains empty and full flags (TXFE, TXFF, RXFE, and RXFF bits), and the UARTRSR register shows overrun status through the OE bit. If the FIFOs are disabled, the empty and full flags are set according to the status of the 1-byte-deep holding registers.

The trigger points at which the FIFOs generate interrupts are controlled through the UART Interrupt FIFO Level Select (UARTIFLS) register. Both FIFOs can be individually configured to trigger interrupts at different levels. Available configurations include ⅛,¼, ½, ¾, and ⅞. For example, if the ¼ option is selected for the receive FIFO, the UART generates a receive interrupt after 4 data bytes are received. Out of reset, both FIFOs are configured to trigger an interrupt at the ½ mark.

6.2.3.3 Interrupts

The UART can generate interrupts when the following conditions are observed:

- Overrun error
- Break error
- Parity error
- Framing error
- Receive timeout
- Transmit (when the condition defined in the TXIFLSEL bit in the UARTIFLS register is met, or if the EOT bit in UARTCTL is set, when the last bit of all transmitted data leaves the serializer)
- Receive (when the condition defined in the RXIFLSEL bit in the UARTIFLS register is met)

All of the interrupt events are ORed together before being sent to the interrupt controller, so the UART can only generate a single interrupt request to the controller at any given time. Software can service multiple interrupt events in a single interrupt service routine by reading the UART Masked Interrupt Status (UARTMIS) register.

The interrupt events that can trigger a controller-level interrupt are defined in the UART Interrupt Mask (UARTIM) register by setting the corresponding IM bits. If interrupts are not used, the raw interrupt status is always visible through the UART Raw Interrupt Status (UARTRIS) register.

Interrupts are always cleared (for both the UARTMIS and UARTRIS registers) by writing a 1 to the corresponding bit in the UART Interrupt Clear (UARTICR) register.

The receive timeout interrupt is asserted when the receive FIFO is not empty, and no further data is received over a 32-bit period when the HSE bit is clear, or over a 64-bit period when the HSE bit is set. The receive timeout interrupt is cleared either when the FIFO becomes empty through reading all the data (or by reading the holding register), or when a 1 is written to the corresponding bit in the UARTICR register.

The receive interrupt changes state when one of the following events occurs:

- If the FIFOs are enabled and the receive FIFO reaches the programmed trigger level, the RXRIS bit is set. The receive interrupt is cleared by reading data from the receive FIFO until it becomes less than the trigger level, or by clearing the interrupt by writing a 1 to the RXIC bit.
- If the FIFOs are disabled (have a depth of one location) and data is received thereby filling the location, the RXRIS bit is set. The receive interrupt is cleared by performing a single read of the receive FIFO, or by clearing the interrupt by writing a 1 to the RXIC bit.

The transmit interrupt changes state when one of the following events occurs:

- If the FIFOs are enabled and the transmit FIFO progresses through the programmed trigger level, the TXRIS bit is set. The transmit interrupt is based on a transition through level, therefore the FIFO must be written past the programmed trigger level or no further transmit interrupts will be generated. The transmit interrupt is cleared by writing data to the transmit FIFO until it becomes greater than the trigger level, or by clearing the interrupt by writing a 1 to the TXIC bit.
- If the FIFOs are disabled (have a depth of one location) and there is no data present in the transmitters single location, the TXRIS bit is set. It is cleared by performing a single write to the transmit FIFO, or by clearing the interrupt by writing a 1 to the TXIC bit.

Copyright © 2017, Texas Instruments Incorporated

6.2.3.4 LoopbackOperation

The UART can be placed into an internal loopback mode for diagnostic or debug work by setting the LBE bit in the UARTCTL register. In loopback mode, data transmitted on the UnTx output is received on the UnRx input. Note that the LBE bit should be set before the UART is enabled.

6.2.3.5 DMA Operation

The UART provides an interface to the μDMA controller with separate channels for transmit and receive. The DMA operation of the UART is enabled through the UART DMA Control (UARTDMACTL) register. When DMA operation is enabled, the UART asserts a DMA request on the receive or transmit channel when the associated FIFO can transfer data. For the receive channel, a single transfer request is asserted whenever any data is in the receive FIFO. A burst transfer request is asserted whenever the amount of data in the receive FIFO is at or above the FIFO trigger level configured in the UARTIFLS register. For the transmit channel, a single transfer request is asserted whenever there is at least one empty location in the transmit FIFO. The burst request is asserted whenever the transmit FIFO contains fewer characters than the FIFO trigger level. The single and burst DMA transfer requests are handled automatically by the μDMA controller, depending on how the DMA channel is configured.

To enable DMA operation for the receive channel, set the RXDMAE bit of the DMA Control (UARTDMACTL) register. To enable DMA operation for the transmit channel, set the TXDMAE bit of the UARTDMACTL register. The UART can also be configured to stop using DMA for the receive channel if a receive error occurs. If the DMAERR bit of the UARTDMACR register is set and a receive error occurs, the DMA receive requests are automatically disabled. This error condition can be cleared by clearing the appropriate UART error interrupt.

If DMA is enabled, then the μDMA controller triggers an interrupt when a transfer is complete. The interrupt occurs on the UART interrupt vector. Therefore, if interrupts are used for UART operation and DMA is enabled, the UART interrupt handler must be designed to handle the μDMA completion interrupt.

6.2.4 Initialization and Configuration

To enable and initialize the UART, the following steps are necessary:

1. Enable the UART module using the UART0CLKEN/UART1CLKEN register.
2. Set the GPIO_PAD_CONFIG CONFMODE bits for the appropriate pins.

This section discusses the steps required to use a UART module. For this example, the UART clock is assumed to be 80 MHz, and the desired UART configuration is:

- 115200 baud rate
- Data length of 8 bits
- One stop bit
- No parity
- FIFOs disabled
- No interrupts

The first thing to consider when programming the UART is the baud-rate divisor (BRD), because the UARTI BRD and UARTF BRD registers must be written before the UARTLCRH register. Using the equation described in Section 6.2.2, the BRD can be calculated:

```
BRD = 80,000,000 / (16 * 115,200) =
          43.410590
```

which means that the DIVINT field of the UARTIBRD register should be set to 43 decimal or 0x2B. The value to be loaded into the UARTFBRD register is calculated by the equation:

```
UARTFBRD[DIVFRAC] = integer(0.410590 * 64 +
          0.5) = 26
```


Copyright © 2017, Texas Instruments Incorporated

With the BRD values in hand, the UART configuration is written to the module in the following order:

1. Disable the UART by clearing the UARTEN bit in the UARTCTL register.
2. Write the integer portion of the BRD to the UARTIBRD register.
3. Write the fractional portion of the BRD to the UARTFBRD register.
4. Write the desired serial parameters to the UARTLCRH register (in this case, a value of 0x0000.0060).
5. Optionally, configure the μDMA channel and enable the DMA options in the UARTDMACTL register.
6. Enable the UART by setting the UARTEN bit in the UARTCTL register.

Copyright © 2017, Texas Instruments Incorporated

6.3 UART Registers

Table 6-2 lists the memory-mapped registers for the UART. All register offset addresses not listed in Table 6-2 should be considered as reserved locations and the register contents should not be modified.

The offset listed is a hexadecimal increment to the register's address, relative to that UART's base address:

- UART0: 0x4000.C000
- UART1: 0x4000.D000

The UART module clock must be enabled before the registers can be programmed. There must be a delay of 3 system clocks after the UART module clock is enabled before any UART module registers are accessed.

The UART must be disabled (see the UARTEN bit in the UARTCTL register) before any of the control registers are reprogrammed. When the UART is disabled during a TX or RX operation, the current transaction is completed prior to the UART stopping.

Table 6-2. UART Registers

Offset	Acronym	Register Name	Section
0h	UARTDR	UART Data	Section 6.3.1
4h	UARTRSR_UARTECR	UART Receive Status/Error Clear	Section 6.3.2
18h	UARTFR	UART Flag	Section 6.3.3
24h	UARTIBRD	UART Integer Baud-Rate Divisor	Section 6.3.4
28h	UARTFBRD	UART Fractional Baud-Rate Divisor	Section 6.3.5
2Ch	UARTLCRH	UART Line Control	Section 6.3.6
30h	UARTCTL	UART Control	Section 6.3.7
34h	UARTIFLS	UART Interrupt FIFO Level Select	Section 6.3.8
38h	UARTIM	UART Interrupt Mask	Section 6.3.9
3Ch	UARTRIS	UART Raw Interrupt Status	Section 6.3.10
40h	UARTMIS	UART Masked Interrupt Status	Section 6.3.11
44h	UARTICR	UART Interrupt Clear	Section 6.3.12
48h	UARTDMACTL	UART DMA Control	Section 6.3.13

Copyright © 2017, Texas Instruments Incorporated

6.3.1 UARTDR Register (Offset = 0h) [reset = 0h]

UARTDR is shown in Figure 6-3 and described in Table 6-3.

Return to Summary Table.

This register is the data register (the interface to the FIFOs).

For transmitted data, if the FIFO is enabled, data written to this location is pushed onto the transmit FIFO. If the FIFO is disabled, data is stored in the transmitter holding register (the bottom word of the transmit FIFO). A write to this register initiates a transmission from the UART.

For received data, if the FIFO is enabled, the data byte and the 4-bit status (break, frame, parity, and overrun) is pushed onto the 12-bit wide receive FIFO. If the FIFO is disabled, the data byte and status are stored in the receiving holding register (the bottom word of the receive FIFO). The received data can be retrieved by reading this register.

Figure 6-3. UARTDR Register

31	30	29	28	27	26	25	24	23	22	21	20	19	18	17	16
RESERVED															
R-0h															
15	14	13	12	11	10	9	8	7	6	5	4	3	2	1	0
RESERVED				OE	BE	PE	FE	DATA							
R-0h				R-0h	R-0h	R-0h	R-0h	R/W-0h							

LEGEND: R/W = Read/Write; R = Read only; W1toCl = Write 1 to clear bit; *-n* = value after reset

Table 6-3. UARTDR Register Field Descriptions

Bit	Field	Type	Reset	Description
31-12	RESERVED	R	0h	
11	OE	R	0h	UART Overrun Error 0h = No data has been lost due to a FIFO overrun. 1h = New data was received when the FIFO was full, resulting in data loss.
10	BE	R	0h	UART Break Error 0h = No break condition has occurred 1h = A break condition has been detected, indicating that the receive data input was held Low for longer than a full-word transmission time (defined as start, data, parity, and stop bits). In FIFO mode, this error is associated with the character at the top of the FIFO. When a break occurs, only one 0 character is loaded into the FIFO. The next character is only enabled after the received data input goes to a 1 (marking state), and the next valid start bit is received.
9	PE	R	0h	UART Parity Error 0h = No parity error has occurred 1h = The parity of the received data character does not match the parity defined by bits 2 and 7 of the UARTLCRH register. In FIFO mode, this error is associated with the character at the top of the FIFO.
8	FE	R	0h	UART Framing Error 0h = No framing error has occurred 1h = The received character does not have a valid stop bit (a valid stop bit is 1).
7-0	DATA	R/W	0h	Data Transmitted or Received Data that is to be transmitted through the UART is written to this field. When read, this field contains the data that was received by the UART.

Copyright © 2017, Texas Instruments Incorporated

6.3.2 UARTRSR_UARTECR Register (Offset = 4h) [reset = 0h]

UARTRSR_UARTECR is shown in Figure 6-4 and described in Table 6-4.

Return to Summary Table.

The UARTRSR/UARTECR register is the receive status register/error clear register.

In addition to the UARTDR register, receive status can also be read from the UARTRSR register. If the status is read from this register, then the status information corresponds to the entry read from UARTDR prior to reading UARTRSR. The status information for overrun is set immediately when an overrun condition occurs.

The UARTRSR register cannot be written.

A write of any value to the UARTECR register clears the framing, parity, break, and overrun errors. All the bits are cleared on reset.

Figure 6-4. UARTRSR_UARTECR Register

31	30	29	28	27	26	25	24
RESERVED							
R-0h							
23	22	21	20	19	18	17	16
RESERVED							
R-0h							
15	14	13	12	11	10	9	8
RESERVED							
R-0h							
7	6	5	4	3	2	1	0
RESERVED				OE_OR_DATA	BE_OR_DATA	PE_OR_DATA	FE_OR_DATA
R-0h				R/W-0h	R/W-0h	R/W-0h	R/W-0h

LEGEND: R/W = Read/Write; R = Read only; W1toCl = Write 1 to clear bit; *-n* = value after reset

Table 6-4. UARTRSR_UARTECR Register Field Descriptions

Bit	Field	Type	Reset	Description
7-4	DATA	W	0h	Error Clear A write to this register of any data clears the framing, parity, break, and overrun flags.
31-4	RESERVED	R	0h	
3	OE_OR_DATA	R/W	0h	UART Overrun Error (R) or Error Clear (W) This bit is cleared by a write to UARTECR. The FIFO contents remain valid because no further data is written when the FIFO is full, only the contents of the shift register are overwritten. The CPU must read the data to empty the FIFO. 0h (R) = No data has been lost due to a FIFO overrun. 1h (R) = New data was received when the FIFO was full, resulting in data loss.
2	BE_OR_DATA	R/W	0h	UART Break Error (R) or Error Clear (W) This bit is cleared to 0 by a write to UARTECR. 0h (R) = No break condition has occurred 1h (R) = A break condition has been detected, indicating that the receive data input was held Low for longer than a full-word transmission time (defined as start, data, parity, and stop bits). In FIFO mode, this error is associated with the character at the top of the FIFO. When a break occurs, only one 0 character is loaded into the FIFO. The next character is only enabled after the receive data input goes to a 1 (marking state) and the next valid start bit is received.

Copyright © 2017, Texas Instruments Incorporated

Table 6-4. UARTRSR_UARTECR Register Field Descriptions (continued)

Bit	Field	Type	Reset	Description
1	PE_OR_DATA	R/W	0h	UART Parity Error (R) or Error Clear (W) This bit is cleared to 0 by a write to UARTECR. 0h (R) = No parity error has occurred 1h (R) = The parity of the received data character does not match the parity defined by bits 2 and 7 of the UARTLCRH register.
0	FE_OR_DATA	R/W	0h	UART Framing Error (R) or Error Clear (W) This bit is cleared to 0 by a write to UARTECR. 0h (R) = No framing error has occurred 1h (R) = The received character does not have a valid stop bit (a valid stop bit is 1). In FIFO mode, this error is associated with the character at the top of the FIFO.

Copyright © 2017, Texas Instruments Incorporated

6.3.3 UARTFR Register (Offset = 18h) [reset = 90h]

UARTFR is shown in Figure 6-5 and described in Table 6-5.

Return to Summary Table.

The UARTFR register is the flag register. After reset, the TXFF, RXFF, and BUSY bits are 0, and TXFE and RXFE bits are 1. The RI and CTS bits indicate the modem flow control and status. The modem bits are only implemented on UART1 and are reserved on UART0.

Figure 6-5. UARTFR Register

31	30	29	28	27	26	25	24
RESERVED							
R-0h							
23	22	21	20	19	18	17	16
RESERVED							
R-0h							
15	14	13	12	11	10	9	8
RESERVED							RI
R-0h							R-0h
7	6	5	4	3	2	1	0
TXFE	RXFF	TXFF	EXFE	BUSY	DCD	DSR	CTS
R-1h	R-0h	R-0h	R-1h	R-0h	R-0h	R-0h	R-0h

LEGEND: R/W = Read/Write; R = Read only; W1toCl = Write 1 to clear bit; *-n* = value after reset

Table 6-5. UARTFR Register Field Descriptions

Bit	Field	Type	Reset	Description
31-9	RESERVED	R	0h	
8	RI	R	0h	Reserved
7	TXFE	R	1h	UART Transmit FIFO Empty The meaning of this bit depends on the state of the FEN bit in the UARTLCRH register. If the FIFO is enabled (FEN is 1), the transmit FIFO is empty. 0h = The transmitter has data to transmit. 1h = If the FIFO is disabled (FEN is 0), the transmit holding register is empty.
6	RXFF	R	0h	UART Receive FIFO Full The meaning of this bit depends on the state of the FEN bit in the UARTLCRH register. If the FIFO is enabled (FEN is 1), the receive FIFO is full. 0h = The receiver can receive data. 1h = If the FIFO is disabled (FEN is 0), the receive holding register is full.
5	TXFF	R	0h	UART Transmit FIFO Full The meaning of this bit depends on the state of the FEN bit in the UARTLCRH register. 0h = The transmitter is not full. 1h = If the FIFO is disabled (FEN is 0), the transmit holding register is full. If the FIFO is enabled (FEN is 1), the transmit FIFO is full.
4	EXFE	R	1h	UART Receive FIFO Empty The meaning of this bit depends on the state of the FEN bit in the UARTLCRH register. If the FIFO is enabled (FEN is 1), the receive FIFO is empty. 0h = The receiver is not empty. 1h = If the FIFO is disabled (FEN is 0), the receive holding register is empty.

Copyright © 2017, Texas Instruments Incorporated

Table 6-5. UARTFR Register Field Descriptions (continued)

Bit	Field	Type	Reset	Description
3	BUSY	R	0h	UART Busy This bit is set when the transmit FIFO becomes non-empty (regardless of whether UART is enabled). 0h = The UART is not busy. 1h = The UART is busy transmitting data. This bit remains set until the complete byte, including all stop bits, has been sent from the shift register.
2	DCD	R	0h	Reserved
1	DSR	R	0h	Reserved
0	CTS	R	0h	Clear To Send This bit is implemented only on UART1 and is reserved for UART0 0h = The U1CTS signal is not asserted. 1h = The U1CTS signal is asserted.

Copyright © 2017, Texas Instruments Incorporated

6.3.4 UARTIBRD Register (Offset = 24h) [reset = 0h]

UARTIBRD is shown in Figure 6-6 and described in Table 6-6.

Return to Summary Table.

The UARTIBRD register is the integer part of the baud-rate divisor value. All the bits are cleared on reset. The minimum possible divide ratio is 1 (when UARTIBRD=0), in which case the UARTFBRD register is ignored. When changing the UARTIBRD register, the new value does not take effect until transmission or reception of the current character is complete. Any changes to the baud-rate divisor must be followed by a write to the UARTLCRH register.

Figure 6-6. UARTIBRD Register

31	30	29	28	27	26	25	24	23	22	21	20	19	18	17	16	15	14	13	12	11	10	9	8	7	6	5	4	3	2	1	0
RESERVED																DIVINT															
R-0h																R/W-0h															

LEGEND: R/W = Read/Write; R = Read only; W1toCl = Write 1 to clear bit; *-n* = value after reset

Table 6-6. UARTIBRD Register Field Descriptions

Bit	Field	Type	Reset	Description
31-16	RESERVED	R	0h	
15-0	DIVINT	R/W	0h	Integer Baud-Rate Divisor

Copyright © 2017, Texas Instruments Incorporated

6.3.5 UARTFBRD Register (Offset = 28h) [reset = 0h]

UARTFBRD is shown in Figure 6-7 and described in Table 6-7.

Return to Summary Table.

The UARTFBRD register is the fractional part of the baud-rate divisor value. All the bits are cleared on reset. When changing the UARTFBRD register, the new value does not take effect until transmission or reception of the current character is complete. Any changes to the baud-rate divisor must be followed by a write to the UARTLCRH register.

Figure 6-7. UARTFBRD Register

31	30	29	28	27	26	25	24	23	22	21	20	19	18	17	16
RESERVED															
R-0h															
15	14	13	12	11	10	9	8	7	6	5	4	3	2	1	0
RESERVED										DIVFRAC					
R-0h										R/W-0h					

LEGEND: R/W = Read/Write; R = Read only; W1toCl = Write 1 to clear bit; *-n* = value after reset

Table 6-7. UARTFBRD Register Field Descriptions

Bit	Field	Type	Reset	Description
31-6	RESERVED	R	0h	
5-0	DIVFRAC	R/W	0h	Fractional Baud-Rate Divisor

Copyright © 2017, Texas Instruments Incorporated

6.3.6 UARTLCRH Register (Offset = 2Ch) [reset = 0h]

UARTLCRH is shown in Figure 6-8 and described in Table 6-8.

Return to Summary Table.

The UARTLCRH register is the line control register. Serial parameters such as data length, parity, and stop bit selection are implemented in this register.

When updating the baud-rate divisor (UARTIBRD or UARTIFRD), the UARTLCRH register must also be written. The write strobe for the baud-rate divisor registers is tied to the UARTLCRH register.

Figure 6-8. UARTLCRH Register

31	30	29	28	27	26	25	24
RESERVED							
R-0h							
23	22	21	20	19	18	17	16
RESERVED							
R-0h							
15	14	13	12	11	10	9	8
RESERVED							
R-0h							
7	6	5	4	3	2	1	0
SPS	WLEN		FEN	STP2	EPS	PEN	BRK
R/W-0h	R/W-0h		R/W-0h	R/W-0h	R/W-0h	R/W-0h	R/W-0h

LEGEND: R/W = Read/Write; R = Read only; W1toCl = Write 1 to clear bit; *-n* = value after reset

Table 6-8. UARTLCRH Register Field Descriptions

Bit	Field	Type	Reset	Description
31-8	RESERVED	R	0h	
7	SPS	R/W	0h	UART Stick Parity Select When bits 1, 2, and 7 of UARTLCRH are set, the parity bit is transmitted and checked as a 0. When bits 1 and 7 are set and 2 is cleared, the parity bit is transmitted and checked as a 1. When this bit is cleared, stick parity is disabled.
6-5	WLEN	R/W	0h	UART Word Length The bits indicate the number of data bits transmitted or received in a frame as follows: 0h = 5 bits (default) 1h = 6 bits 2h = 7 bits 3h = 8 bits
4	FEN	R/W	0h	UART Enable FIFOs 0h = The FIFOs are disabled (Character mode). The FIFOs become 1-byte-deep holding registers. 1h = The transmit and receive FIFO buffers are enabled (FIFO mode).
3	STP2	R/W	0h	UART Two Stop Bits Select When in 7816 smartcard mode (the SMART bit is set in the UARTCTL register), the number of stop bits is forced to 2. 0h = One stop bit is transmitted at the end of a frame. 1h = Two stop bits are transmitted at the end of a frame. The receive logic does not check for two stop bits being received.

Copyright © 2017, Texas Instruments Incorporated

Table 6-8. UARTLCRH Register Field Descriptions (continued)

Bit	Field	Type	Reset	Description
2	EPS	R/W	0h	UART Even Parity Select This bit has no effect when parity is disabled by the PEN bit. 0h = Odd parity is performed, which checks for an odd number of 1s. 1h = Even parity generation and checking is performed during transmission and reception, which checks for an even number of 1s in data and parity bits.
1	PEN	R/W	0h	UART Parity Enable 0h = Parity is disabled and no parity bit is added to the data frame. 1h = Parity checking and generation is enabled.
0	BRK	R/W	0h	UART Send Break A low level is continually output on the UnTx signal, after completing transmission of the current character. For the proper execution of the break command, software must set this bit for at least two frames (character periods).

Copyright © 2017, Texas Instruments Incorporated

6.3.7 UARTCTL Register (Offset = 30h) [reset = 300h]

UARTCTL is shown in Figure 6-9 and described in Table 6-9.

Return to Summary Table.

The UARTCTL register is the control register. All the bits are cleared on reset except for the Transmit Enable (TXE) and Receive Enable (RXE) bits, which are set.

To enable the UART module, the UARTEN bit must be set. If software requires a configuration change in the module, the UARTEN bit must be cleared before the configuration changes are written. If the UART is disabled during a transmit or receive operation, the current transaction is completed prior to the UART stopping.

NOTE: The UARTCTL register should not be changed while the UART is enabled or else the results are unpredictable. The following sequence is recommended for making changes to the UARTCTL register.

1. Disable the UART.
2. Wait for the end of transmission or reception of the current character.
3. Flush the transmit FIFO by clearing bit 4 (FEN) in the line control register (UARTLCRH).
4. Reprogram the control register.
5. Enable the UART.

Figure 6-9. UARTCTL Register

31	30	29	28	27	26	25	24
RESERVED							
R-0h							
23	22	21	20	19	18	17	16
RESERVED							
R-0h							
15	14	13	12	11	10	9	8
CTSEN	RTSEN	RESERVED		RTS	DTR	RXE	TXE
R/W-0h	R/W-0h	R-0h		R/W-0h	R/W-0h	R/W-1h	R/W-1h
7	6	5	4	3	2	1	0
LBE	RESERVED	HSE	EOT	RESERVED	RESERVED	SIREN	UARTEN
R/W-0h	R-0h	R/W-0h	R/W-0h	R-0h	R-0h	R/W-0h	R/W-0h

LEGEND: R/W = Read/Write; R = Read only; W1toCl = Write 1 to clear bit; *-n* = value after reset

Table 6-9. UARTCTL Register Field Descriptions

Bit	Field	Type	Reset	Description
31-16	RESERVED	R	0h	
15	CTSEN	R/W	0h	Enable Clear To Send 0h = CTS hardware flow control is disabled. 1h = CTS hardware flow control is enabled. Data is only transmitted when the U1CTS signal is asserted.
14	RTSEN	R/W	0h	Enable Request to Send 0h = RTS hardware flow control is disabled. 1h = RTS hardware flow control is enabled. Data is only requested (by asserting U1RTS) when the receive FIFO has available entries.
13-12	RESERVED	R	0h	

Copyright © 2017, Texas Instruments Incorporated

Table 6-9. UARTCTL Register Field Descriptions (continued)

Bit	Field	Type	Reset	Description
11	RTS	R/W	0h	Request to Send When RTSEN is clear, the status of this bit is reflected on the U1RTS signal. If RTSEN is set, this bit is ignored on a write and should be ignored on read.
10	DTR	R/W	0h	Reserved
9	RXE	R/W	1h	UART Receive Enable 0h = The receive section of the UART is disabled. 1h = The receive section of the UART is enabled. If the UART is disabled in the middle of a receive, it completes the current character before stopping. Note: To enable reception, the UARTEN bit must also be set.
8	TXE	R/W	1h	UART Transmit Enable If the UART is disabled in the middle of a transmission, it completes the current character before stopping. 0h = The transmit section of the UART is disabled. 1h = The transmit section of the UART is enabled. Note: To enable transmission, the UARTEN bit must also be set.
7	LBE	R/W	0h	UART Loop Back Enable 0h = Normal operation. 1h = The UnTx path is fed through the UnRx path.
6	RESERVED	R	0h	
5	HSE	R/W	0h	High-Speed Enable 0h = The UART is clocked using the system clock divided by 16. 1h = The UART is clocked using the system clock divided by 8. Note: System clock used is also dependent on the baud-rate divisor configuration. The state of this bit has no effect on clock generation in ISO 7816 smart card mode (the SMART bit is set).
4	EOT	R/W	0h	End of Transmission This bit determines the behavior of the TXRIS bit in the UARTRIS register. 0h = The TXRIS bit is set when the transmit FIFO condition specified in UARTIFLS is met. 1h = The TXRIS bit is set only after all transmitted data, including stop bits, have cleared the serializer.
3	RESERVED	R	0h	
2	RESERVED	R	0h	
1	SIREN	R/W	0h	RESERVED
0	UARTEN	R/W	0h	UART Enable If the UART is disabled in the middle of transmission or reception, it completes the current character before stopping. 0h = The UART is disabled. 1h = The UART is enabled.

Copyright © 2017, Texas Instruments Incorporated

6.3.8 UARTIFLS Register (Offset = 34h) [reset = 12h]

UARTIFLS is shown in Figure 6-10 and described in Table 6-10.

Return to Summary Table.

The UARTIFLS register is the interrupt FIFO level select register. You can use this register to define the FIFO level at which the TXRIS and RXRIS bits in the UARTRIS register are triggered.

The interrupts are generated based on a transition through a level rather than being based on the level. That is, the interrupts are generated when the fill level progresses through the trigger level. For example, if the receive trigger level is set to the half-way mark, the interrupt is triggered as the module is receiving the 9th character.

Out of reset, the TXIFLSEL and RXIFLSEL bits are configured so that the FIFOs trigger an interrupt at the half-way mark.

Figure 6-10. UARTIFLS Register

31	30	29	28	27	26	25	24	23	22	21	20	19	18	17	16
RESERVED															
R-0h															
15	14	13	12	11	10	9	8	7	6	5	4	3	2	1	0
RESERVED										RXIFLSEL			TXIFSEL		
R-0h										R/W-2h			R/W-2h		

LEGEND: R/W = Read/Write; R = Read only; W1toCl = Write 1 to clear bit; *-n* = value after reset

Table 6-10. UARTIFLS Register Field Descriptions

Bit	Field	Type	Reset	Description
31-6	RESERVED	R	0h	
5-3	RXIFLSEL	R/W	2h	UART Receive Interrupt FIFO Level Select The trigger points for the receive interrupt are as follows: 0h = Reserved 1h = RX FIFO full 2h = RX FIFO full (default) 3h = RX FIFO full 4h = RX FIFO full
2-0	TXIFSEL	R/W	2h	UART Transmit Interrupt FIFO Level Select The trigger points for the transmit interrupt are as follows: 0h = Reserved 1h = TX FIFO empty 2h = TX FIFO empty (default) 3h = TX FIFO empty 4h = TX FIFO empty Note: If the EOT bit in UARTCTL is set, the transmit interrupt is generated once the FIFO is completely empty and all data including stop bits have left the transmit serializer. In this case, the setting of TXIFLSEL is ignored.

Copyright © 2017, Texas Instruments Incorporated

6.3.9 UARTIM Register (Offset = 38h) [reset = 0h]

UARTIM is shown in Figure 6-11 and described in Table 6-11.

Return to Summary Table.

The UARTIM register is the interrupt mask set/clear register.

On a read, this register gives the current value of the mask on the relevant interrupt. Setting a bit allows the corresponding raw interrupt signal to be routed to the interrupt controller. Clearing a bit prevents the raw interrupt signal from being sent to the interrupt controller.

Figure 6-11. UARTIM Register

31	30	29	28	27	26	25	24
RESERVED							
R-0h							
23	22	21	20	19	18	17	16
RESERVED						DMATXIM	DMARXIM
R-0h						R/W-0h	R/W-0h
15	14	13	12	11	10	9	8
RESERVED			9BITIM	RESERVED	OEIM	BEIM	PEIM
R-0h			R/W-0h	R-0h	R/W-0h	R/W-0h	R/W-0h
7	6	5	4	3	2	1	0
FEIM	RTIM	TXIM	RXIM	DSRIM	DCDIM	CTSIM	RIIM
R/W-0h	R/W-0h	R/W-0h	R/W-0h	R/W-0h	R/W-0h	R/W-0h	R/W-0h

LEGEND: R/W = Read/Write; R = Read only; W1toCl = Write 1 to clear bit; *-n* = value after reset

Table 6-11. UARTIM Register Field Descriptions

Bit	Field	Type	Reset	Description
31-18	RESERVED	R	0h	
17	DMATXIM	R/W	0h	Transmit DMA Interrupt Mask 0h = The DMATXRIS interrupt is suppressed and not sent to the interrupt controller. 1h = An interrupt is sent to the interrupt controller when the DMATXRIS bit in the UARTRIS register is set.
16	DMARXIM	R/W	0h	Receive DMA Interrupt Mask 0h = The DMARXRIS interrupt is suppressed and not sent to the interrupt controller. 1h = An interrupt is sent to the interrupt controller when the DMARXRIS bit in the UARTRIS register is set.
15-13	RESERVED	R	0h	
12	9BITIM	R/W	0h	Reserved
11	RESERVED	R	0h	
10	OEIM	R/W	0h	UART Overrun Error Interrupt Mask 0h = The OERIS interrupt is suppressed and not sent to the interrupt controller. 1h = An interrupt is sent to the interrupt controller when the OERIS bit in the UARTRIS register is set.
9	BEIM	R/W	0h	UART Break Error Interrupt Mask 0h = The BERIS interrupt is suppressed and not sent to the interrupt controller. 1h = An interrupt is sent to the interrupt controller when the BERIS bit in the UARTRIS register is set.

Copyright © 2017, Texas Instruments Incorporated

Table 6-11. UARTIM Register Field Descriptions (continued)

Bit	Field	Type	Reset	Description
8	PEIM	R/W	0h	UART Parity Error Interrupt Mask 0h = The PERIS interrupt is suppressed and not sent to the interrupt controller. 1h = An interrupt is sent to the interrupt controller when the PERIS bit in the UARTRIS register is set.
7	FEIM	R/W	0h	UART Framing Error Interrupt Mask 0h = The FERIS interrupt is suppressed and not sent to the interrupt controller. 1h = An interrupt is sent to the interrupt controller when the FERIS bit in the UARTRIS register is set.
6	RTIM	R/W	0h	UART Receive Time-Out Interrupt Mask 0h = The RTRIS interrupt is suppressed and not sent to the interrupt controller. 1h = An interrupt is sent to the interrupt controller when the RTRIS bit in the UARTRIS register is set.
5	TXIM	R/W	0h	UART Transmit Interrupt Mask 0h = The TXRIS interrupt is suppressed and not sent to the interrupt controller. 1h = An interrupt is sent to the interrupt controller when the TXRIS bit in the UARTRIS register is set.
4	RXIM	R/W	0h	UART Receive Interrupt Mask 0h = The RXRIS interrupt is suppressed and not sent to the interrupt controller. 1h = An interrupt is sent to the interrupt controller when the RXRIS bit in the UARTRIS register is set.
3	DSRIM	R/W	0h	Reserved
2	DCDIM	R/W	0h	Reserved
1	CTSIM	R/W	0h	UART Clear to Send Modem Interrupt Mask 0h = The CTSRIS interrupt is suppressed and not sent to the interrupt controller. 1h = An interrupt is sent to the interrupt controller when the CTSRIS bit in the UARTRIS register is set.
0	RIIM	R/W	0h	Reserved

Copyright © 2017, Texas Instruments Incorporated

6.3.10 UARTRIS Register (Offset = 3Ch) [reset = 0h]

UARTRIS is shown in Figure 6-12 and described in Table 6-12.

Return to Summary Table.

The UARTRIS register is the raw interrupt status register. On a read, this register gives the current raw status value of the corresponding interrupt. A write has no effect.

Figure 6-12. UARTRIS Register

31	30	29	28	27	26	25	24
RESERVED							
R-0h							
23	22	21	20	19	18	17	16
RESERVED						DMATXRIS	DMARXRIS
R-0h						R-0h	R-0h
15	14	13	12	11	10	9	8
RESERVED			RESERVED		OERIS	BERIS	PERIS
R-0h			R-0h		R-0h	R-0h	R-0h
7	6	5	4	3	2	1	0
FERIS	RTRIS	TXRIS	RXRIS	DSRRIS	DCDRIS	CTSRIS	RIRIS
R-0h	R-0h	R-0h	R-0h	R-0h	R-0h	R-0h	R-0h

LEGEND: R/W = Read/Write; R = Read only; W1toCl = Write 1 to clear bit; *-n* = value after reset

Table 6-12. UARTRIS Register Field Descriptions

Bit	Field	Type	Reset	Description
31-18	RESERVED	R	0h	
17	DMATXRIS	R	0h	Transmit DMA Raw Interrupt Status This bit is cleared by writing a 1 to the DMATXIC bit in the UARTICR register. 0h = No interrupt 1h = The transmit DMA has completed.
16	DMARXRIS	R	0h	Receive DMA Raw Interrupt Status This bit is cleared by writing a 1 to the DMARXIC bit in the UARTICR register. 0h = No interrupt 1h = The receive DMA has completed.
15-11	RESERVED	R	0h	
10	OERIS	R	0h	UART Overrun Error Raw Interrupt Status This bit is cleared by writing a 1 to the OEIC bit in the UARTICR register. 0h = No interrupt 1h = An overrun error has occurred.
9	BERIS	R	0h	UART Break Error Raw Interrupt Status This bit is cleared by writing a 1 to the BEIC bit in the UARTICR register. 0h = No interrupt 1h = A break error has occurred.
8	PERIS	R	0h	UART Parity Error Raw Interrupt Status This bit is cleared by writing a 1 to the PEIC bit in the UARTICR register. 0h = No interrupt 1h = A parity error has occurred.

Copyright © 2017, Texas Instruments Incorporated

Table 6-12. UARTRIS Register Field Descriptions (continued)

Bit	Field	Type	Reset	Description
7	FERIS	R	0h	UART Framing Error Raw Interrupt Status This bit is cleared by writing a 1 to the FEIC bit in the UARTICR register. 0h = No interrupt 1h = A framing error has occurred.
6	RTRIS	R	0h	UART Receive Time-Out Raw Interrupt Status This bit is cleared by writing a 1 to the RTIC bit in the UARTICR register. 0h = No interrupt 1h = A receive time out has occurred.
5	TXRIS	R	0h	UART Transmit Raw Interrupt Status If the EOT bit is set, the last bit of all transmitted data and flags has left the serializer. This bit is cleared by writing a 1 to the TXIC bit in the UARTICR register or by writing data to the transmit FIFO until it becomes greater than the trigger level, if the FIFO is enabled, or by writing a single byte if the FIFO is disabled. 0h = No interrupt 1h = If the EOT bit in the UARTCTL register is clear, the transmit FIFO level has passed through the condition defined in the UARTIFLS register.
4	RXRIS	R	0h	UART Receive Raw Interrupt Status This bit is cleared by writing a 1 to the RXIC bit in the UARTICR register or by reading data from the receive FIFO until it becomes less than the trigger level, if the FIFO is enabled, or by reading a single byte if the FIFO is disabled. 0h = No interrupt 1h = The receive FIFO level has passed through the condition defined in the UARTIFLS register.
3	DSRRIS	R	0h	Reserved
2	DCDRIS	R	0h	Reserved
1	CTSRIS	R	0h	UART Clear to Send Modem Raw Interrupt Status This bit is cleared by writing a 1 to the CTSIC bit in the UARTICR register. 0h = No interrupt 1h = Clear to Send used for software flow control.
0	RIRIS	R	0h	Reserved

Copyright © 2017, Texas Instruments Incorporated

6.3.11 UARTMIS Register (Offset = 40h) [reset = 0h]

UARTMIS is shown in Figure 6-13 and described in Table 6-13.

Return to Summary Table.

The UARTMIS register is the masked interrupt status register. On a read, this register gives the current masked status value of the corresponding interrupt. A write has no effect.

Figure 6-13. UARTMIS Register

31	30	29	28	27	26	25	24
RESERVED							
R-0h							
23	22	21	20	19	18	17	16
RESERVED						DMATXMIS	DMARXMIS
R-0h						R-0h	R-0h
15	14	13	12	11	10	9	8
RESERVED			RESERVED		OEMIS	BEMIS	PEMIS
R-0h			R-0h		R-0h	R-0h	R-0h
7	6	5	4	3	2	1	0
FEMIS	RTMIS	TXMIS	RXMIS	DSRMIS	DCDMIS	CTSMIS	RIMIS
R-0h	R-0h	R-0h	R-0h	R-0h	R-0h	R-0h	R-0h

LEGEND: R/W = Read/Write; R = Read only; W1toCl = Write 1 to clear bit; *-n* = value after reset

Table 6-13. UARTMIS Register Field Descriptions

Bit	Field	Type	Reset	Description
31-18	RESERVED	R	0h	
17	DMATXMIS	R	0h	Transmit DMA Masked Interrupt Status This bit is cleared by writing a 1 to the DMATXIC bit in the UARTICR register. 0h = An interrupt has not occurred or is masked. 1h = An unmasked interrupt was signaled due to the completion of the transmit DMA.
16	DMARXMIS	R	0h	Receive DMA Masked Interrupt Status This bit is cleared by writing a 1 to the DMARXIC bit in the UARTICR register. 0h = An interrupt has not occurred or is masked. 1h = An unmasked interrupt was signaled due to the completion of the receive DMA.
15-11	RESERVED	R	0h	
10	OEMIS	R	0h	UART Overrun Error Masked Interrupt Status This bit is cleared by writing a 1 to the OEIC bit in the UARTICR register. 0h = An interrupt has not occurred or is masked. 1h = An unmasked interrupt was signaled due to an overrun error.
9	BEMIS	R	0h	UART Break Error Masked Interrupt Status This bit is cleared by writing a 1 to the BEIC bit in the UARTICR register. 0h = An interrupt has not occurred or is masked. 1h = An unmasked interrupt was signaled due to a break error.
8	PEMIS	R	0h	UART Parity Error Masked Interrupt Status This bit is cleared by writing a 1 to the PEIC bit in the UARTICR register. 0h = An interrupt has not occurred or is masked. 1h = An unmasked interrupt was signaled due to a parity error.

Copyright © 2017, Texas Instruments Incorporated

Table 6-13. UARTMIS Register Field Descriptions (continued)

Bit	Field	Type	Reset	Description
7	FEMIS	R	0h	UART Framing Error Masked Interrupt Status This bit is cleared by writing a 1 to the FEIC bit in the UARTICR register. 0h = An interrupt has not occurred or is masked. 1h = An unmasked interrupt was signaled due to a framing error.
6	RTMIS	R	0h	UART Receive Time-Out Masked Interrupt Status This bit is cleared by writing a 1 to the RTIC bit in the UARTICR register. 0h = An interrupt has not occurred or is masked. 1h = An unmasked interrupt was signaled due to a receive time out.
5	TXMIS	R	0h	UART Transmit Masked Interrupt Status This bit is cleared by writing a 1 to the TXIC bit in the UARTICR register or by writing data to the transmit FIFO until it becomes greater than the trigger level, if the FIFO is enabled, or by writing a single byte if the FIFO is disabled. 0h = An interrupt has not occurred or is masked. 1h = An unmasked interrupt was signaled due to passing through the specified transmit FIFO level (if the EOT bit is clear) or due to the transmission of the last data bit (if the EOT bit is set).
4	RXMIS	R	0h	UART Receive Masked Interrupt Status This bit is cleared by writing a 1 to the RXIC bit in the UARTICR register or by reading data from the receive FIFO until it becomes less than the trigger level, if the FIFO is enabled, or by reading a single byte if the FIFO is disabled. 0h = An interrupt has not occurred or is masked. 1h = An unmasked interrupt was signaled due to passing through the specified receive FIFO level.
3	DSRMIS	R	0h	Reserved
2	DCDMIS	R	0h	Reserved
1	CTSMIS	R	0h	UART Clear to Send Modem Masked Interrupt Status This bit is cleared by writing a 1 to the CTSIC bit in the UARTICR register. 0h = An interrupt has not occurred or is masked. 1h = An unmasked interrupt was signaled due to Clear to Send.
0	RIMIS	R	0h	Reserved

Copyright © 2017, Texas Instruments Incorporated

6.3.12 UARTICR Register (Offset = 44h) [reset = 0h]

UARTICR is shown in Figure 6-14 and described in Table 6-14.

Return to Summary Table.

The UARTICR register is the interrupt clear register. On a write of 1, the corresponding interrupt (both raw interrupt and masked interrupt, if enabled) is cleared. A write of 0 has no effect.

Figure 6-14. UARTICR Register

31	30	29	28	27	26	25	24
RESERVED							
R-0h							
23	22	21	20	19	18	17	16
RESERVED						DMATXIC	DMARXIC
R-0h						W1C-0h	W1C-0h
15	14	13	12	11	10	9	8
RESERVED			RESERVED		OEIC	BEIC	PEIC
R-0h			W1C-0h		W1C-0h	W1C-0h	W1C-0h
7	6	5	4	3	2	1	0
FEIC	RTIC	TXIC	RXIC	DSRMIC	DCDMIC	CTSMIC	RIMIC
W1C-0h	W1C-0h	W1C-0h	W1C-0h	W1C-0h	W1C-0h	W1C-0h	W1C-0h

LEGEND: R/W = Read/Write; R = Read only; W1toCl = Write 1 to clear bit; *-n* = value after reset

Table 6-14. UARTICR Register Field Descriptions

Bit	Field	Type	Reset	Description
31-18	RESERVED	R	0h	
17	DMATXIC	W1C	0h	Transmit DMA Interrupt Clear Writing a 1 to this bit clears the DMATXRIS bit in the UARTRIS register and the DMATXMIS bit in the UARTMIS register.
16	DMARXIC	W1C	0h	Receive DMA Interrupt Clear Writing a 1 to this bit clears the DMARXRIS bit in the UARTRIS register and the DMARXMIS bit in the UARTMIS register.
15-11	RESERVED	R	0h	
10	OEIC	W1C	0h	Overrun Error Interrupt Clear Writing a 1 to this bit clears the OERIS bit in the UARTRIS register and the OEMIS bit in the UARTMIS register.
9	BEIC	W1C	0h	Break Error Interrupt Clear Writing a 1 to this bit clears the BERIS bit in the UARTRIS register and the BEMIS bit in the UARTMIS register.
8	PEIC	W1C	0h	Parity Error Interrupt Clear Writing a 1 to this bit clears the PERIS bit in the UARTRIS register and the PEMIS bit in the UARTMIS register.
7	FEIC	W1C	0h	Framing Error Interrupt Clear Writing a 1 to this bit clears the FERIS bit in the UARTRIS register and the FEMIS bit in the UARTMIS register.
6	RTIC	W1C	0h	Receive Time-Out Interrupt Clear Writing a 1 to this bit clears the RTRIS bit in the UARTRIS register and the RTMIS bit in the UARTMIS register.
5	TXIC	W1C	0h	Receive Time-Out Interrupt Clear Writing a 1 to this bit clears the RTRIS bit in the UARTRIS register and the RTMIS bit in the UARTMIS register.
4	RXIC	W1C	0h	Receive Interrupt Clear Writing a 1 to this bit clears the RXRIS bit in the UARTRIS register and the RXMIS bit in the UARTMIS register.

Copyright © 2017, Texas Instruments Incorporated

Table 6-14. UARTICR Register Field Descriptions (continued)

Bit	Field	Type	Reset	Description
3	DSRMIC	W1C	0h	Reserved
2	DCDMIC	W1C	0h	Reserved
1	CTSMIC	W1C	0h	UART Clear to Send Modem Interrupt Clear Writing a 1 to this bit clears the CTSRIS bit in the UARTRIS register and the CTSMIS bit in the UARTMIS register.
0	RIMIC	W1C	0h	Reserved

Copyright © 2017, Texas Instruments Incorporated

6.3.13 UARTDMACTL Register (Offset = 48h) [reset = 0h]

UARTDMACTL is shown in Figure 6-15 and described in Table 6-15.

Return to Summary Table.

The UARTDMACTL register is the DMA control register.

Figure 6-15. UARTDMACTL Register

31	30	29	28	27	26	25	24
RESERVED							
R-0h							
23	22	21	20	19	18	17	16
RESERVED							
R-0h							
15	14	13	12	11	10	9	8
RESERVED							
R-0h							
7	6	5	4	3	2	1	0
RESERVED					DMAERR	TXDMAE	RXDMAE
R-0h					R/W-0h	R/W-0h	R/W-0h

LEGEND: R/W = Read/Write; R = Read only; W1toCl = Write 1 to clear bit; *-n* = value after reset

Table 6-15. UARTDMACTL Register Field Descriptions

Bit	Field	Type	Reset	Description
31-3	RESERVED	R	0h	
2	DMAERR	R/W	0h	DMA on Error 0h = DMA receive requests are unaffected when a receive error occurs. 1h = DMA receive requests are automatically disabled when a receive error occurs.
1	TXDMAE	R/W	0h	Transmit DMA Enable 0h = DMA for the receive FIFO is disabled. 1h = DMA for the receive FIFO is enabled.
0	RXDMAE	R/W	0h	Receive DMA Enable 0h = DMA for the receive FIFO is disabled. 1h = DMA for the receive FIFO is enabled.

Copyright © 2017, Texas Instruments Incorporated

Inter-Integrated Circuit (I2C) Interface

Topic **Page**

7.1 Overview **179**
7.2 Functional Description **181**
7.3 I2C Registers **197**

Copyright © 2017, Texas Instruments Incorporated

7.1 Overview

The Inter-Integrated Circuit (I2C) bus provides bi-directional data transfer through a two-wire design (a serial data line SDA and a serial clock line SCL), and interfaces to external I2C devices such as serial memory (EEPROM), sensors, LCDs and so on.

The 32xx chip includes one I2C module with the following features:

- Devices on the I2C bus can be designated as either a master or a slave:
  - Supports both transmitting and receiving data as either a master or a slave
  - Supports simultaneous master and slave operation
- Four I2C modes:
  - Master transmit
  - Master receive
  - Slave transmit
  - Slave receive
- Supported transmission speeds:
  - Standard (100 Kbps)
  - Fast-mode (400 Kbps)
- Master and slave interrupt generation:
  - Master generates interrupts when a transmit or receive operation completes (or aborts due to an error)
  - Slave generates interrupts when data has been transferred or requested by a master, or when a START or STOP condition is detected
- Master with arbitration and clock synchronization, multimaster support, and 7-bit addressing mode
- Efficient transfers using micro-direct memory access controller (µDMA)
  - Separate channels for transmit and receive
  - Ability to execute single data transfers or burst data transfers using the RX and TX FIFOs in the I2C

Copyright © 2017, Texas Instruments Incorporated

7.1.1 Block Diagram

Figure 7-1. I2C Block Diagram

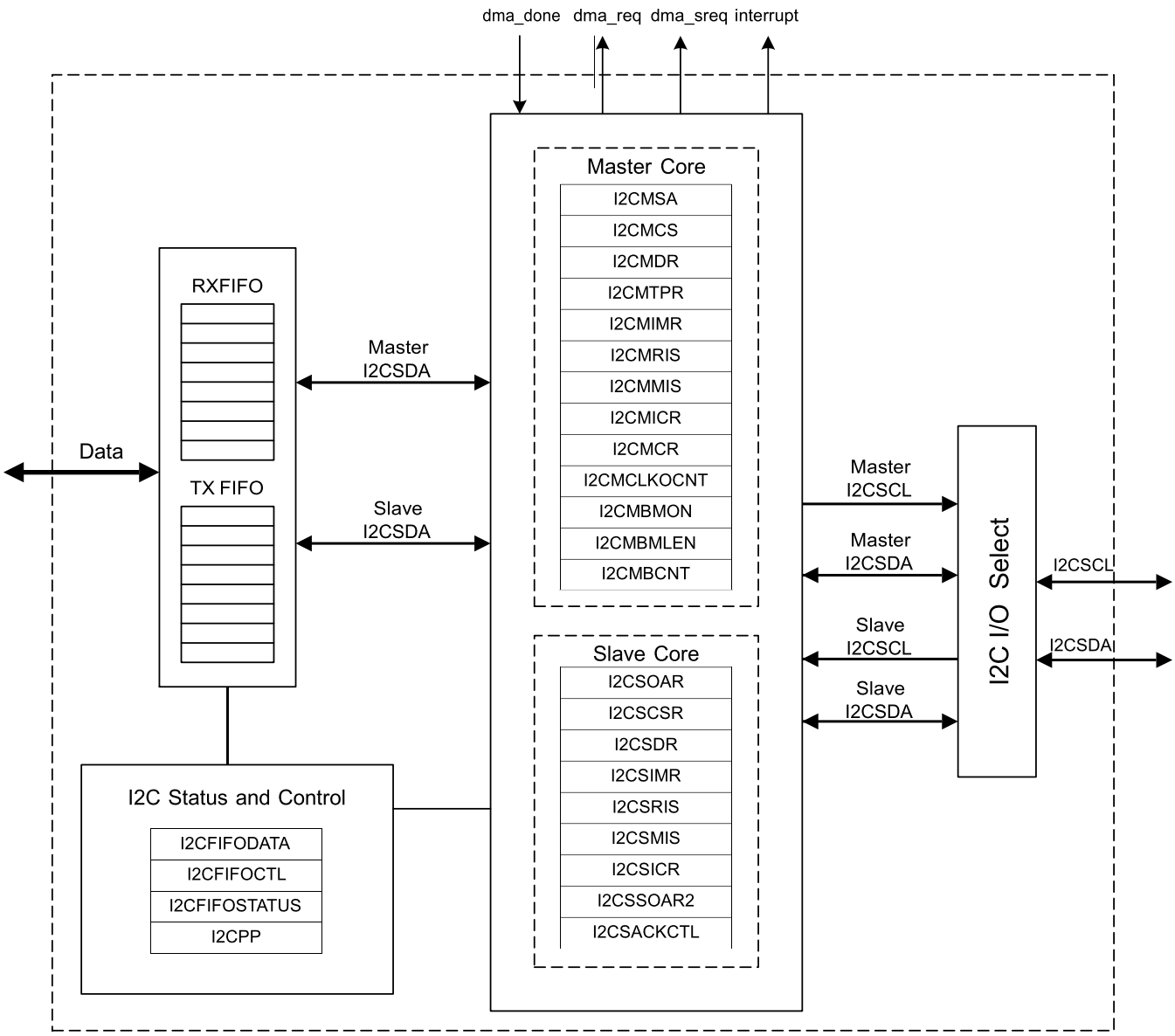

This section describes the details of the architecture of the peripheral and how it is structured. The architecture and design details are common to all of the operation modes. Information that is mode-specific to one of the supported modes can be put in the corresponding supported-use case section. This section describes how the peripheral works.

7.1.2 Signal Description

The following table lists the external signals of the I2C interface and describes the function of each. The I2C interface signals are alternate functions for some GPIO signals and default to be GPIO signals at reset. The pin mux/pin assignment column in Table 7-1 lists the possible GPIO pin placements for the I2C signals. The CONFMODE bits in the GPIO_PAD_CONFIG register should be set to choose the I2C function. Set the I2CSDA and I2CSCL pins to open-drain using the IODEN bits of the GPIO_PAD_CONFIG register.

Copyright © 2017, Texas Instruments Incorporated

Table 7-1. I2C Signals (64QFN)

Pin Name	Pin Number	Pin Mux / Pin Assignment	Pin Type	Buffer Type	Description
I2C1SCL	Pin 30 Pin Y		I/O	OD	I ^{2}C module 1 clock. This signal has an active pullup.
I2C1SDA	Pin 29 Pin Q Pin R		I/O	OD	I2C module 1 data

7.2 Functional Description

The CC32xx has one instance of an I2C module comprised of both master and slave functions, identified by a unique address. A master-initiated communication generates the clock signal, SCL. For proper operation, the SDA and SCL pin must be configured as an open-drain signal. Both SDA and SCL signals must be connected to a positive supply voltage using a pullup resistor. A typical I2C bus configuration is shown in Figure 7-2. The typical pullups needed for proper operation is approximately 2KΩ.

See Chapter 7 for I2C timing diagrams.

Figure 7-2. I2C Bus Configuration

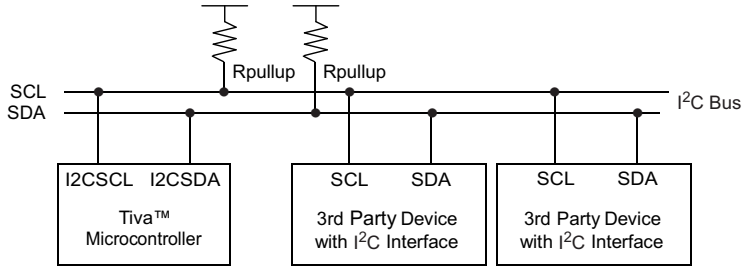

7.2.1 I2C Bus Functional Overview

The I2C bus uses only two signals: SDA and SCL, named I2CSDA and I2CSCL on CC32xx microcontrollers. SDA is the bi-directional serial data line and SCL is the bi-directional serial clock line. The bus is considered idle when both lines are High.

Every transaction on the I2C bus is nine bits long, consisting of eight data bits and a single acknowledge bit. The number of bytes per transfer (defined as the time between a valid START and STOP condition, described in Section 7.2.1.1) is unrestricted, but each data byte must be followed by an acknowledge bit, and data must be transferred to MSB first. When a receiver cannot receive another complete byte, the receiver holds the clock line SCL Low and forces the transmitter into a wait state. The data transfer continues when the receiver releases the clock SCL.

7.2.1.1 START and STOP Conditions

The protocol of the I2C bus defines two states to begin and end a transaction: START and STOP. A high-to-low transition on the SDA line while the SCL is High is defined as a START condition, and a low-to-high transition on the SDA line while SCL is High is defined as a STOP condition. The bus is considered busy after a START condition and free after a STOP condition (see Figure 7-3).

Copyright © 2017, Texas Instruments Incorporated

Figure 7-3. START and STOP Conditions

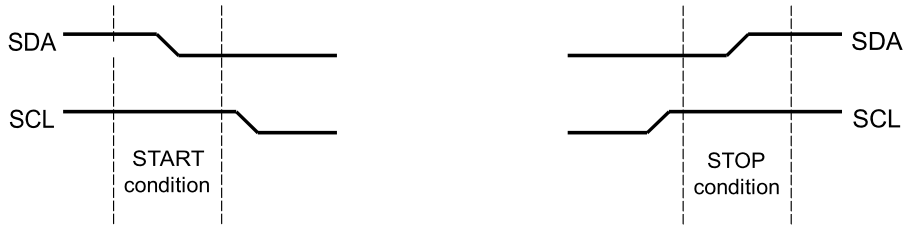

The STOP bit determines if the cycle stops at the end of the data cycle, or continues on to a repeated START condition. To generate a single transmit cycle, the I2C Master Slave Address (I2CMSA) register is written with the desired address, the R/S bit is cleared, and the Control register is written with ACK=X (0 or 1), STOP=1, START=1, and RUN=1 to perform the operation and stop. When the operation is completed (or aborted due an error), the interrupt pin becomes active and the data may be read from the I2C Master Data (I2CMDR) register. When the I2C module operates in master receiver mode, the ACK bit is normally set, causing the I2C bus controller to transmit an acknowledge automatically after each byte. This bit must be cleared when the I2C bus controller requires no further data to be transmitted from the slave transmitter.

7.2.1.2 Data Format with 7-Bit Address

Data transfers follow the format shown in Figure 7-4. After the START condition, a slave address is transmitted. This address is 7-bits long followed by an eighth bit, which is a data direction bit (R/S bit in the I2CMSA register). If the R/S bit is clear, the bit indicates a transmit operation (send), and if it is set, the bit indicates a request for data (receive). A data transfer is always terminated by a STOP condition generated by the master, however, a master can initiate communications with another device on the bus by generating a repeated START condition and addressing another slave without first generating a STOP condition. Various combinations of receive and transmit formats are then possible within a single transfer.

Figure 7-4. Complete Data Transfer with a 7-Bit Address

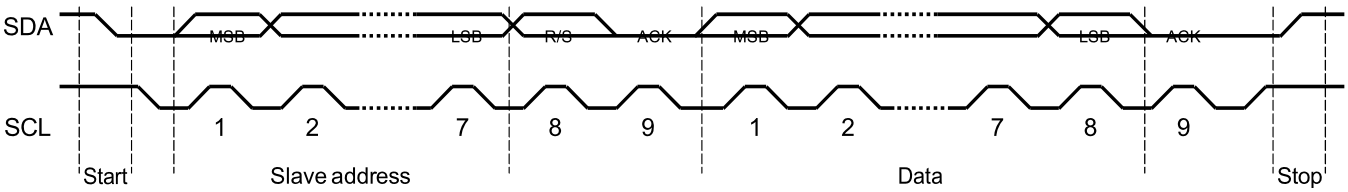

The first seven bits of the first byte make up the slave address (see Figure 7-5). The eighth bit determines the direction of the message. A zero in the R/S position of the first byte indicates that the master transmits (sends) data to the selected slave, and a one in this position indicates that the master receives data from the slave.

Figure 7-5. R/S Bit in First Byte

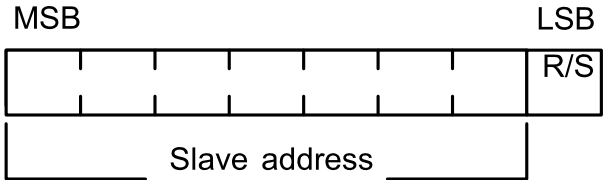

7.2.1.3 Data Validity

The data on the SDA line must be stable during the high period of the clock, and the data line can only change when SCL is Low (see Figure 7-6).

Copyright © 2017, Texas Instruments Incorporated

Figure 7-6. Data Validity During Bit Transfer on the I2C Bus

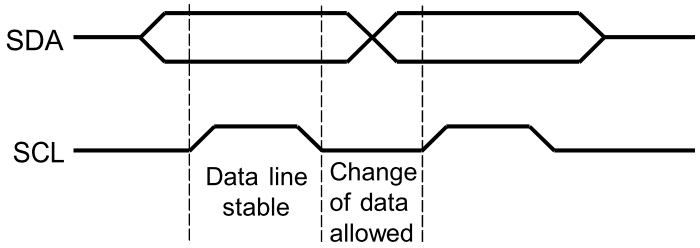

7.2.1.4 Acknowledge

All bus transactions have a required acknowledge clock cycle generated by the master. During the acknowledge cycle, the transmitter (which can be the master or slave) releases the SDA line. To acknowledge the transaction, the receiver must pull down SDA during the acknowledge clock cycle. The data transmitted out by the receiver during the acknowledge cycle must comply with the data validity requirements described in Section 7.2.1.3.

When a slave receiver does not acknowledge the slave address, SDA must be left High by the slave so that the master can generate a STOP condition and abort the current transfer. If the master device is acting as a receiver during a transfer, it is responsible for acknowledging each transfer made by the slave. Because the master controls the number of bytes in the transfer, it signals the end of data to the slave transmitter by not generating an acknowledge on the last data byte. The slave transmitter must then release SDA to allow the master to generate the STOP or a repeated START condition.

If the slave is required to provide a manual ACK or NACK, the I2C Slave ACK Control (I2CSACKCTL) register allows the slave to NACK for invalid data or command or ACK for valid data or command. When this operation is enabled, the MCU slave module I2C clock is pulled low after the last data bit, until this register is written with the indicated response.

7.2.1.5 Repeated Start

The I2C master module has the capability of executing a repeated START (transmit or receive) after an initial transfer has occurred.

A repeated start sequence for a master transmit is as follows:

1. When the device is in the idle state, the master writes the slave address to the I2CMSA register and configures the R/S bit for the desired transfer type.
2. Data is written to the I2CMDR register.
3. When the BUSY bit in the I2CMCS register is 0, the master writes 0x3 to the I2CMCS register to initiate a transfer.
4. The master does not generate a STOP condition, but instead writes another slave address to the I2CMSA register, then writes 0x3 to initiate the repeated START.

A repeated start sequence for a master receive is similar:

1. When the device is in idle, the master writes the slave address to the I2CMSA register and configures the R/S bit for the desired transfer type.
2. The master reads data from the I2CMDR register.
3. When the BUSY bit in the I2CMCS register is 0, the master writes 0x3 to the I2CMCS register to initiate a transfer.
4. The master does not generate a STOP condition, but instead writes another slave address to the I2CMSA register, then writes 0x3 to initiate the repeated START.

Copyright © 2017, Texas Instruments Incorporated

7.2.1.6 Clock Low Timeout (CLTO)

The I2C slave can extend the transaction by periodically pulling the clock low to create a slow bit transfer rate. The I2C module has a 12-bit programmable counter that tracks how long the clock has been held low. The upper 8 bits of the count value are software-programmable through the I2C Master Clock Low Timeout Count (I2CMCLKOCNT) register. The lower four bits are not user-visible, and are 0x0. The CNTL value programmed in the I2CMCLKOCNT register must be greater than 0x01. The application can program the eight most significant bits of the counter to reflect the acceptable cumulative low period in transaction. The count is loaded at the START condition and counts down on each falling edge of the internal bus clock of the master. The internal bus clock generated for this counter runs at the programmed I2C speed, even if SCL is held low on the bus. Upon reaching terminal count, the master state machine forces ABORT on the bus by issuing a STOP condition at the instance of SCL and SDA release.

For example, if an I2C module operates at 100-kHz speed, programming the I2CMCLKOCNT register to 0xDA translates the value 0xDA0, because the lower four bits are set to 0x0. This translates to a decimal value of 3488 clocks, or a cumulative clock low period of 34.88 ms at 100 kHz.

The CLKRIS bit in the I2C Master Raw Interrupt Status (I2CMRIS) register is set when the clock timeout period is reached, allowing the master to start corrective action to resolve the remote slave state. In addition, the CLKTO bit in the I2C Master Control/Status (I2CMCS) register is set; this bit is cleared when a STOP condition is sent, or during the I2C master reset. The status of the raw SDA and SCL signals are readable by software through the SDA and SCL bits in the I2C Master Bus Monitor (I2CMBMON) register to help determine the state of the remote slave.

In the event of a CLTO condition, application software must choose how it intends to attempt bus recovery. Most applications may attempt to manually toggle the I2C pins to force the slave to let go of the clock signal (a common solution is to attempt to force a STOP on the bus). If a CLTO is detected before the end of a burst transfer, and the bus is successfully recovered by the master, the master hardware attempts to finish the pending burst operation. Depending on the state of the slave after bus recovery, the actual behavior on the bus varies. If the slave resumes in a state where it can acknowledge the master (essentially, where it was before the bus hang), it continues where it left off. However, if the slave resumes in a reset state (or if a forced STOP by the master causes the slave to enter the idle state), it may ignore the master's attempt to complete the burst operation, and NAK the first data byte that the master sends or requests.

Because the behavior of slaves cannot always be predicted, the application software should always write the STOP bit in the I2C Master Configuration (I2CMCR) register during the CLTO interrupt service routine. This limits the amount of data the master attempts to send or receive upon bus recovery to a single byte, and after the single byte is on the wire, the master issues a STOP. An alternative solution is to have the application software reset the I2C peripheral before attempting to manually recover the bus. This solution allows the I2C master hardware to return to a known good (and idle) state before attempting to recover a stuck bus, and prevents any unwanted data from appearing on the wire.

NOTE: The master clock low timeout counter counts for the entire time SCL is held Low continuously. If SCL is de-asserted at any point, the master clock low timeout counter is reloaded with the value in the I2CMCLKOCNT register, and begins counting down from this value.

7.2.1.7 Dual Address

The I2C interface supports dual-address capability for the slave. The additional programmable address is provided, and can be matched if enabled. In legacy mode with dual address disabled, the I2C slave provides an ACK on the bus if the address matches the OAR field in the I2CSOAR register. In dual address mode, the I2C slave provides an ACK on the bus if either the OAR field in the I2CSOAR register or the OAR2 field in the I2CSOAR2 register is matched. The enable for dual address is programmable through the OAR2EN bit in the I2CSOAR2 register, and there is no disable on the legacy address.

The OAR2SEL bit in the I2CSCSR register indicates if the ACKed address is the alternate address or not. When this bit is clear, it indicates either legacy operation or no address match.

Copyright © 2017, Texas Instruments Incorporated

7.2.1.8 Arbitration

A master may only start a transfer if the bus is idle. Two or more masters can generate a START condition within minimum hold time of the START condition. In these situations, an arbitration scheme takes place on the SDA line, while SCL is High. During arbitration, the first of the competing master devices to place a 1 (High) on SDA, while another master transmits a 0 (Low), switches off its data output stage and retires until the bus is idle again.

Arbitration can take place over several bits. The first stage is a comparison of address bits, and if both masters are trying to address the same device, arbitration continues on to the comparison of data bits.

If arbitration is lost when the I2C master is initiating a BURST with the TX FIFO enabled, the application should execute the following steps to correctly handle the arbitration loss:

1. Flush and disable the TX FIFO
2. Clear and mask the TXFE interrupt by clearing the TXFEIM bit in the I2CMIMR register.

Once the bus is IDLE, the TXFIFO can be filled and enabled, the TXFE bit can be unmasked and a new BURST transaction initiated.

7.2.2 Supported Speed Modes

The I2C bus in the CC32xx can run in standard mode (100 kbps) or fast mode (400 kbps). The selected mode should match the speed of the other I2C devices on the bus.

7.2.2.1 Standard and Fast Modes

Standard and fast modes are selected using a value in the I2C Master Timer Period (I2CMTPR) register that results in an SCL frequency of 100 kbps for standard mode and 400 kbps for fast mode.

The I2C clock rate is determined by the parameters CLK_PRD, TIMER_PRD, SCL_LP, and SCL_HP where:

- CLK_PRD is the system clock period
- SCL_LP is the low phase of SCL (fixed at 6)
- SCL_HP is the high phase of SCL (fixed at 4)

TIMER_PRD is the programmed value in the I2CMTPR register. This value is determined by replacing the known variables in the equation below and solving for TIMER_PRD.

The I2C clock period is calculated as follows:

SCL_PERIOD = 2 × (1 + TIMER_PRD) × (SCL_LP + SCL_HP) × CLK_PRD

For example:

CLK_PRD = 12.5 ns

TIMER_PRD = 39

SCL_LP=6

SCL_HP=4

yields a SCL frequency of:

1/SCL_PERIOD = 100 Khz

Table 7-2 gives examples of the timer periods to generate standard and fast mode SCL frequencies based on the fixed 80-MHz system clock frequency.

Table 7-2. Timer Periods

System clock	Timer Period	Standard Mode	Timer Period	Fast Mode	
80 MHz	0x27	100 Kbps	0x09	400 Kbps	

Copyright © 2017, Texas Instruments Incorporated

7.2.3 Interrupts

The I2C can generate interrupts when the following conditions are observed in the master module:

- Master transaction completed (RIS bit)
- Master arbitration lost (ARBLOSTRIS bit)
- Master address/data NACK (NACKRIS bit)
- Master bus timeout (CLKRIS bit)
- Next byte request (RIS bit)
- Stop condition on bus detected (STOPRIS bit)
- Start condition on bus detected (STARTRIS bit)
- RX DMA interrupt pending (DMARXRIS bit)
- TX DMA interrupt pending (DMATXRIS bit)
- Trigger value for FIFO has been reached and a TX FIFO request interrupt is pending (TXRIS bit)
- Trigger value for FIFO has been reached and a RX FIFO request interrupt is pending (RXRIS bit)
- Transmit FIFO is empty (TXFERIS bit)
- Receive FIFO is full (RXFFRIS bit) Interrupts are generated when the following conditions are observed in the Slave Module:
- Slave transaction received (DATARIS bit)
- Slave transaction requested (DATARIS bit)
- Slave next byte transfer request (DATARIS bit)
- Stop condition on bus detected (STOPRIS bit)
- Start condition on bus detected (STARTRIS bit)
- RX DMA interrupt pending (DMARXRIS bit)
- TX DMA interrupt pending (DMATXRIS bit)
- Programmable trigger value for FIFO has been reached and a TX FIFO request interrupt is pending (TXRIS bit)
- Programmable trigger value for FIFO has been reached and a RX FIFO request interrupt is pending (RXRIS bit)
- Transmit FIFO is empty (TXFERIS bit)
- Receive FIFO is full (RXFFRIS bit)

The I2C master and I2C slave modules have separate interrupt registers. Interrupts can be masked by clearing the appropriate bit in the I2CMIMR or I2CSIMR registers. The RIS bit in the Master Raw Interrupt Status (I2CMRIS) register and the DATARIS bit in the Slave Raw Interrupt Status (I2CSRIS) register have multiple interrupt causes, including a next byte transfer request interrupt. This interrupt is generated when both master and slave are requesting a receive or transmit transaction.

7.2.4 Loopback Operation

The I2C modules can be placed into an internal loopback mode for diagnostic or debug work by setting the LPBKbit in the I2C Master Configuration (I2CMCR) register. In loopback mode, the SDA and SCL signals from the master and are tied to the SDA and SCL signals of the slave module, to allow internal testing of the device without requiring I/O.

7.2.5 FIFO and µDMA Operation

Both the master and the slave module can access two 8-byte FIFOs used in conjunction with the µDMA for fast transfer of data. The transmit (TX) FIFO and receive (RX) FIFO can be independently assigned to either the I2C master or I2C slave. Thus, the following FIFO assignments are allowed:

- The transmit and receive FIFOs can be assigned to the master
- The transmit and receive FIFOs can be assigned to the slave
- The transmit FIFO can be assigned to the master, while the receive FIFO is assigned to the slave, and

Copyright © 2017, Texas Instruments Incorporated

vice versa.

In most cases, both FIFOs are assigned to either the master or the slave. The FIFO assignment is configured by programming the TXASGNMT and RXASGNMT bit in the I2C FIFO Control (I2CFIFOCTL) register.

Each FIFO has a programmable threshold point which indicates when the FIFO service interrupt should be generated. Additionally, a FIFO receive full and transmit empty interrupt can be enabled in the Interrupt Mask (I2CxIMR) registers of both the master and slave. If the TXFERIS interrupt is cleared (by setting the TXFEIC bit) when the TX FIFO is empty, the TXFERIS interrupt does not reassert, even though the TX FIFO remains empty in this situation.

When a FIFO is not assigned to a master or a slave module, the FIFO interrupt and status signals to the module are forced to a state that indicates the FIFO is empty. For example, if the TX FIFO is assigned to the master module, the status signals to the slave transmit interface indicates that the FIFO is empty.

NOTE: The FIFOs must be empty when reassigning the FIFOs for proper functionality.

7.2.5.1 Master Module Burst Mode

A BURST command is provided for the master module, which allows a sequence of data transfers using the µDMA (or software, if desired) to handle the data in the FIFO. The BURST command is enabled by setting the BURST bit in the Master Control/Status (I2CMCS) register. The number of bytes transferred by a BURST request is programmed in the I2C Master Burst Length (I2CMBLEN) register, and a copy of this value is automatically written to the I2C Master Burst Count (I2CMBCNT) register to be used as a down-counter during the BURST transfer. The bytes written to the I2C FIFO Data (I2CFIFODATA) register are transferred to the RX FIFO or TX FIFO, depending on whether a transmit or receive is being executed. If data is NACKed during a BURST and the STOP bit is set in the I2CMCS register, the transfer terminates. If the STOP bit is not set, the software application must issue a repeated STOP or START when a NACK interrupt is asserted. In the case of a NACK, the I2CMBCNT register can determine the amount of data that was transferred prior to the BURST termination. If the address is NACKed during a transfer, a STOP is issued.

7.2.5.1.1 Master Module µDMA Functionality

When the Master Control/Status (I2CMCS) register is set to enable BURST, and the master I2C µDMA channel is enabled in the DMA Channel Map Select n (DMACHMAPn) registers in the µDMA, the master control module asserts either the internal single µDMA request signal (dma_sreq) or multiple µDMA request signal (dma_req) to the µDMA. There are separate dma_req and dma_sreq signals for transmit and receive. A single µDMA request (dma_sreq) is asserted by the master module when the RX FIFO has at least one data byte present in the FIFO or when the TX FIFO has at least one space available to fill. The dma_req (or BURST) signal is asserted when RX FIFO fill level is higher than trigger level or the TX FIFO burst length remaining is less than 4 bytes and the FIFO fill level is less than trigger level. If a single transfer or BURST operation has completed, the µDMA sends a dma_done signal to the master module, represented by the DMATX/DMARX interrupts in the I2CMIMR, I2CMRIS, I2CMMIS, and I2CMICR registers.

If the µDMA I2C channel is disabled and software is handling the BURST command, software can read the FIFO Status (I2CFIFOSTAT) register and the Master Burst Count (I2CMBC) register to determine whether the FIFO needs servicing during the BURST transaction. A trigger value can be programmed in the I2CFIFOCTL register to allow for interrupts at various fill levels of the FIFOs.

The NACK and ARBLOST bits in the interrupt status registers can be enabled to indicate no acknowledgment of data transfer or an arbitration loss on the bus.

When the master module is transmitting FIFO data, software can fill the TX FIFO in advance of setting the BURST bit in the I2CMCS register. If the FIFO is empty when the µDMA is enabled for BURST mode, the dma_req and dma_sreq both assert (assuming the I2CMBLEN register is programmed to at least 4 bytes and the TX FIFO fill level is less than the trigger set). If the I2CMBLEN register value is less than 4 and the TX FIFO is not full but more than trigger level, only dma_sreq asserts. Single requests are generated

Copyright © 2017, Texas Instruments Incorporated

as required to keep the FIFO full, until the number of bytes specified in the I2CMBLEN register has been transferred to the FIFO (and the I2CMBCOUNT register reaches 0x0). At this point, no further requests are generated until the next BURST command is issued. If the µDMA is disabled, FIFOs are serviced based on the interrupts active in the master interrupt status registers, the FIFO trigger values shown in the I2CFIFOSTATUS register and completion of a BURST transfer.

When the master module is receiving FIFO data, the RX FIFO is initially empty and no requests are asserted. If data is read from the slave and placed into the RX FIFO, the dma_sreq signal to the µDMA is asserted to indicate there is data to be transferred. If the RX FIFO contains at least 4 bytes, the dma_req signal is also asserted. The µDMA continues to transfer data out of the RX FIFO until it has reached the amount of bytes programmed in the I2CMBLEN register.

NOTE: The TXFEIM interrupt mask bit in the I2CMIMR register should be clear (masking the TXFE interrupt) when the master is performing an RX Burst from the RXFIFO, and unmasked before starting a TX FIFO transfers.

7.2.5.1.2 Slave Module

The slave module also has the capability to use the µDMA in RX and TX FIFO data transfers. If the TX FIFO is assigned to the slave module and the TXFIFO bit is set in the I2CSCSR register, the slave module generates a single µDMA request, dma_sreq, if the master module requests the next byte transfer. If the FIFO fill level is less than the trigger level, a µDMA multiple transfer request, dma_req, is asserted to continue data transfers from the µDMA.

If the RX FIFO is assigned to the slave module and the RXFIFO bit is set in the I2CSCSR register, then the slave module generates a signal µDMA request, dma_sreq, if there is any data to be transferred. The dma_req signal is asserted when the RX FIFO has more data than the trigger level programmed by the RXTRIG bit in the I2CFIFOCTL register.

NOTE: TI recommends that an application should not switch between the I2CSDR register and TX FIFO or vice versa for successive transactions.

7.2.6 Command Sequence Flow Charts

This section details the steps required to perform the various I2C transfer types in both master and slave mode.

7.2.6.1 I2C Master Command Sequences

The figures that follow show the command sequences available for the I2C master.

Copyright © 2017, Texas Instruments Incorporated

Figure 7-7. Master Single TRANSMIT

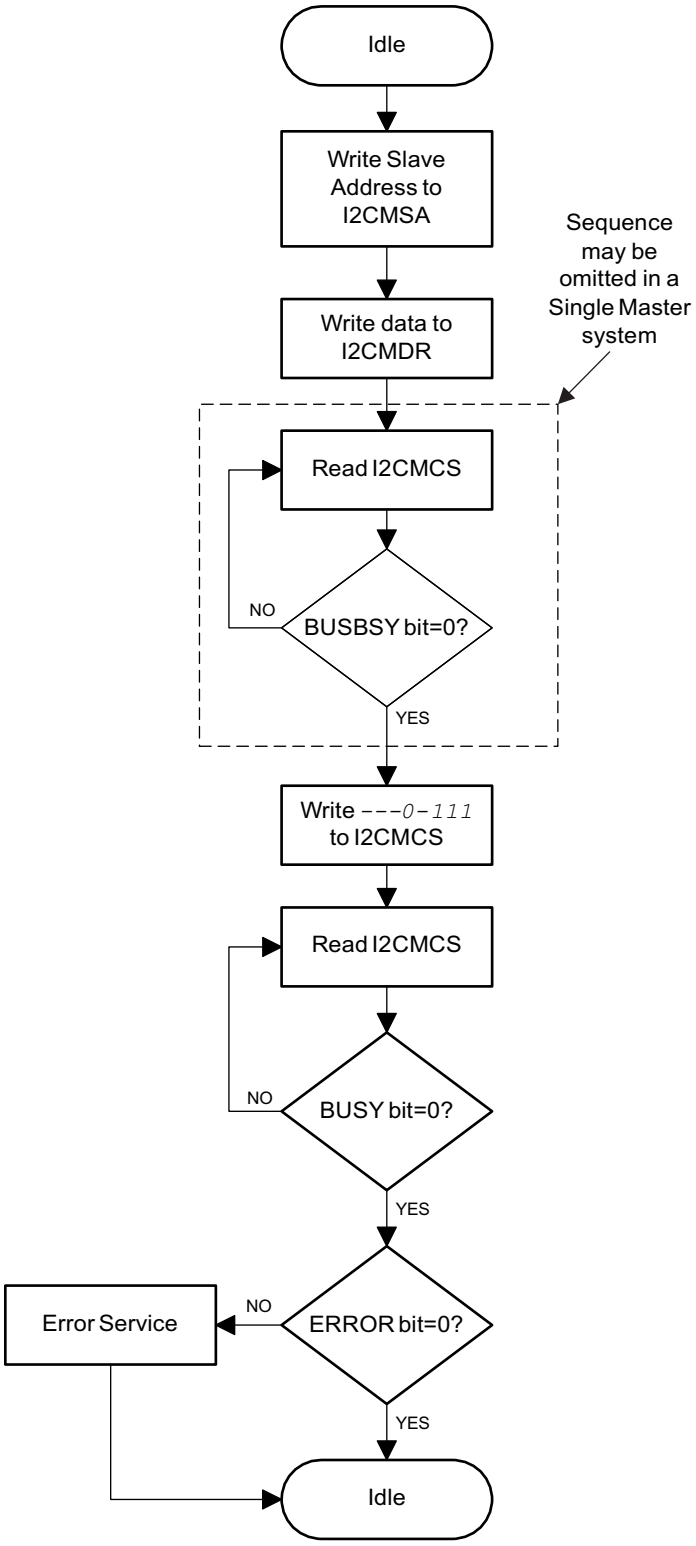

Copyright © 2017, Texas Instruments Incorporated

Figure 7-8. Master Single RECEIVE

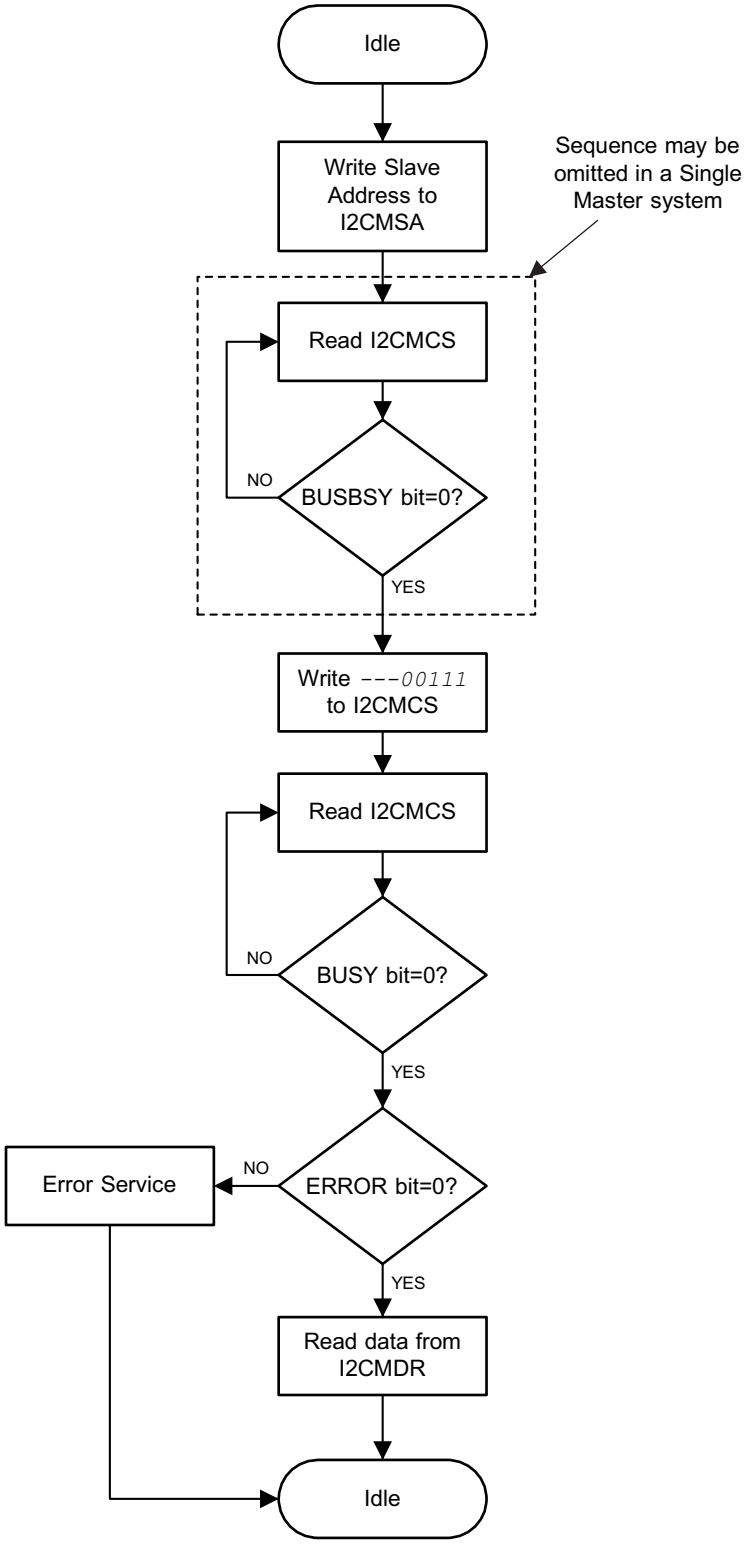

Copyright © 2017, Texas Instruments Incorporated

Figure 7-9. Master TRANSMIT of Multiple Data Bytes

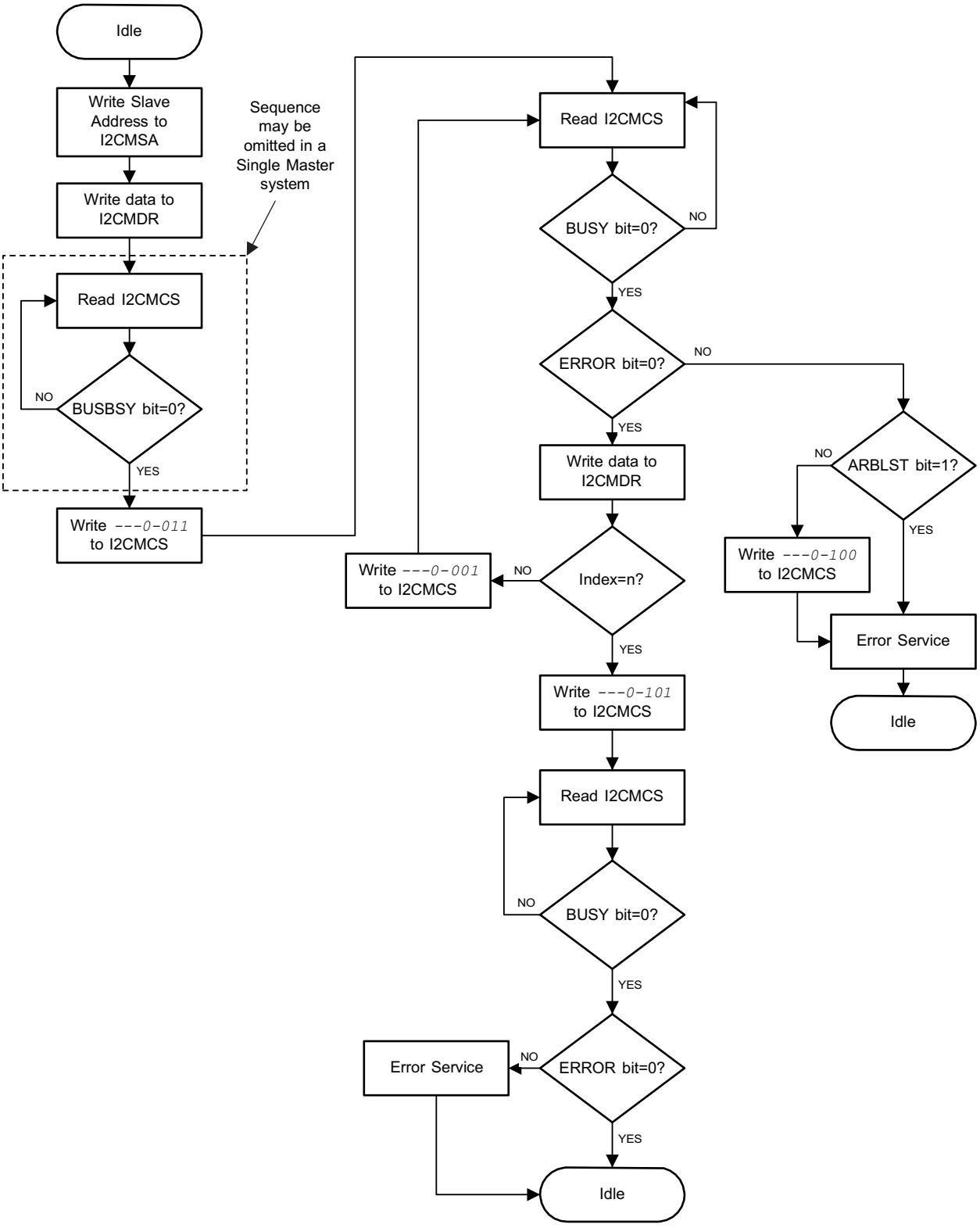

Copyright © 2017, Texas Instruments Incorporated

Figure 7-10. Master RECEIVE of Multiple Data Bytes

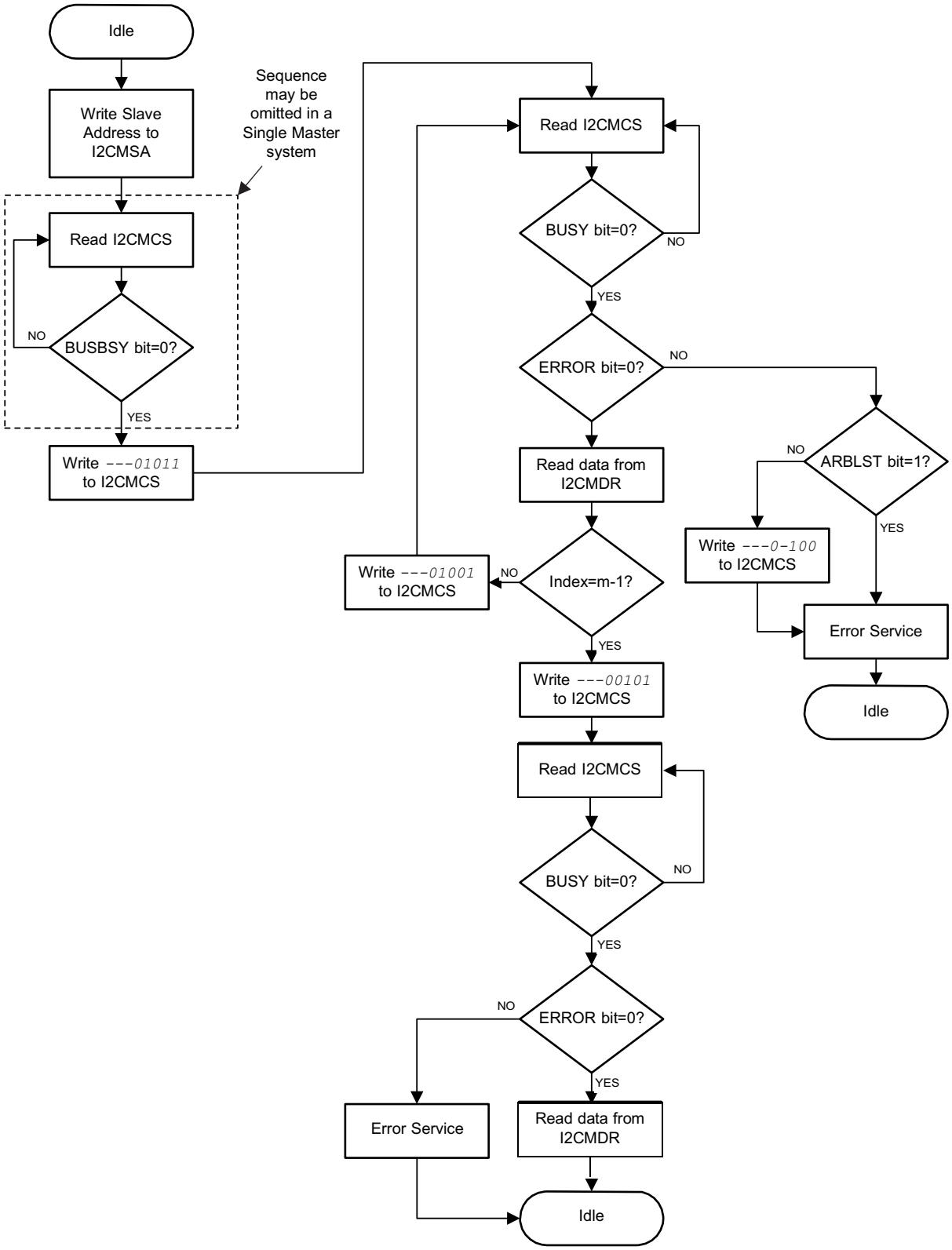

Copyright © 2017, Texas Instruments Incorporated

Figure 7-11. Master RECEIVE with Repeated START after Master TRANSMIT

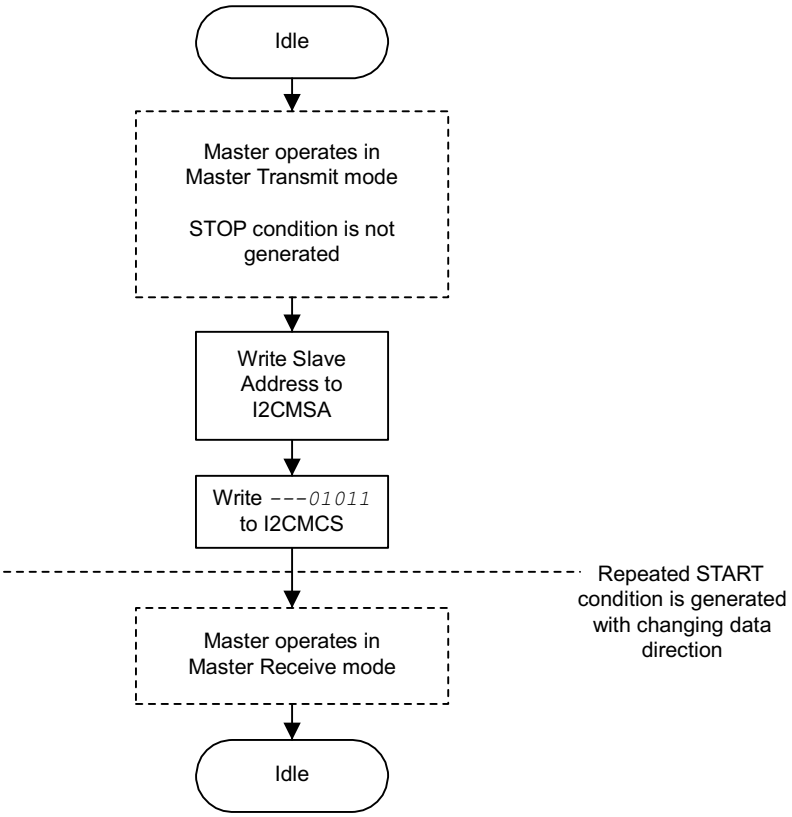

Copyright © 2017, Texas Instruments Incorporated

Figure 7-12. Master TRANSMIT with Repeated START after Master RECEIVE

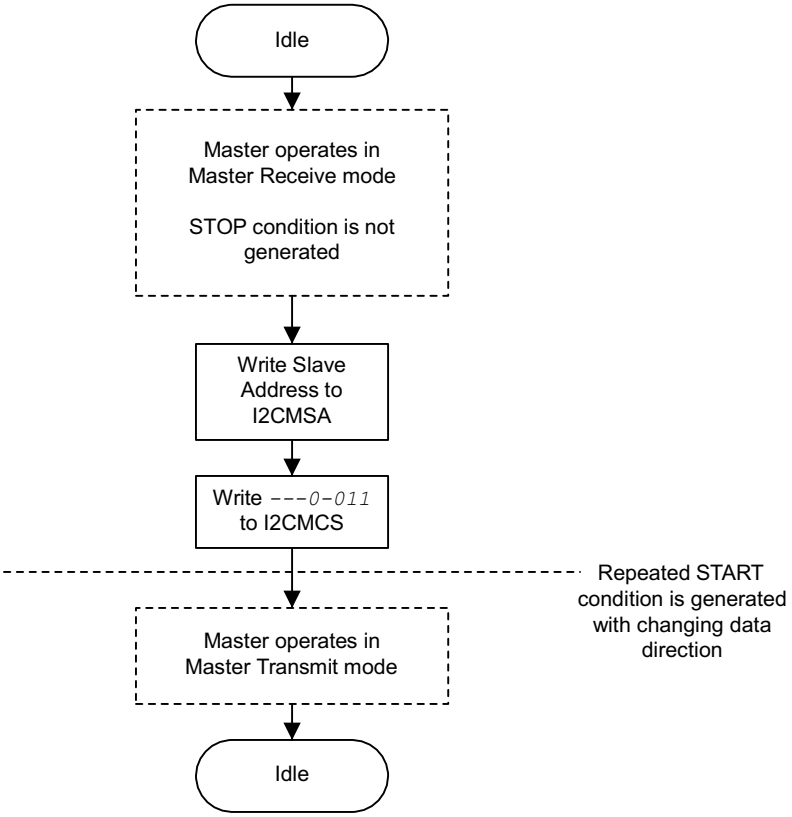

Copyright © 2017, Texas Instruments Incorporated

7.2.6.2 I2C Slave Command Sequences

Figure 7-13 presents the command sequence available for the I2C slave.

Figure 7-13. Slave Command Sequence

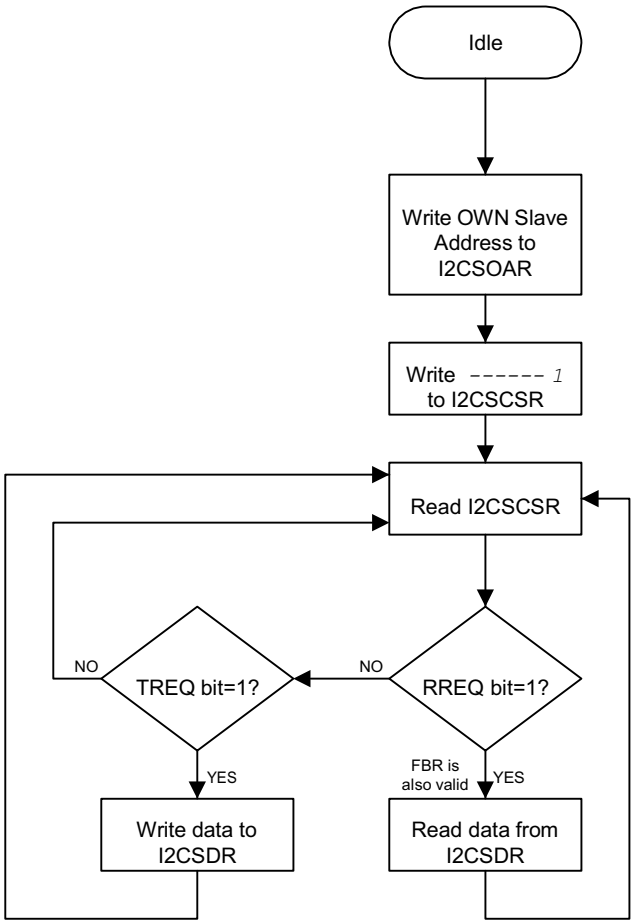

Copyright © 2017, Texas Instruments Incorporated

7.2.7 Initialization and Configuration

The following example shows how to configure the I2C module to transmit a single byte as a master. This assumes the system clock is 80 MHz.

1. Enable the I2C clock using the I2CLCKEN register in the System Control module.
2. The CONFMODE bits in the GPIO_PAD_CONFIG register should be set to choose the I2C function.
3. Enable the I2CSCL pin for open-drain operation using the IODEN bits of the GPIO_PAD_CONFIG register.
4. Initialize the I2C master by writing the I2CMCR register with a value of 0x0000.0010.
5. Set the desired SCL clock speed of 100 Kbps by writing the I2CMTPR register with the correct value. The value written to the I2CMTPR register represents the number of system clock periods in one SCL clock period. The TPR value is determined by the following equation:
   TPR = (System Clock/(2*(SCL_LP + SCL_HP)*SCL_CLK))-1;
   TPR = (80 MHz/(2*(6+4)*100000))-1;
   TPR = 39
   Write the I2CMTPR register with the value of 0x0000.0039.
6. Specify the slave address of the master, and that the next operation is a transmit by writing the I2CMSA register with a value of 0x0000.0076. This sets the slave address to 0x3B.
7. Place data (byte) to be transmitted in the data register by writing the I2CMDR register with the desired data.
8. Initiate a single byte transmit of the data from master to slave by writing the I2CMCS register with a value of 0x0000.0007 (STOP, START, RUN).
9. Wait until the transmission completes by polling the BUSBSY bit of the I2CMCS register until the bit has been cleared.
10. Check the ERROR bit in the I2CMCS register to confirm the transmit was acknowledged.

Copyright © 2017, Texas Instruments Incorporated

7.3 I2C Registers

Table 7-3 lists the memory-mapped registers for the I2C. All register offset addresses not listed in Table 7-3 should be considered as reserved locations and the register contents should not be modified.

All addresses given are relative to the I2C base address: 0x4002.0000.

The I2C module clock must be enabled before the registers can be programmed. There must be a delay of 3 system clocks after the I2C module clock is enabled before any I2C module registers are accessed.

The hw_i2c.h file in the TivaWare Driver Library uses a base address of 0x800 for the I2C slave registers. Be aware when using registers with offsets between 0x800 and 0x818 that TivaWare for E Series uses an offset between 0x000 and 0x018 with the slave base address.

Table 7-3. I2C Registers

Offset	Acronym	Register Name	Section
0h	I2CMSA	I2C Master Slave Address	Section 7.3.1
4h	I2CMCS	I2C Master Control/Status	Section 7.3.2
8h	I2CMDR	I2C Master Data	Section 7.3.3
Ch	I2CMTPR	I2C Master Timer Period	Section 7.3.4
10h	I2CMIMR	I2C Master Interrupt Mask	Section 7.3.5
14h	I2CMRIS	I2C Master Control/Status	Section 7.3.6
18h	I2CMMIS	I2C Master Masked Interrupt Status	Section 7.3.7
1Ch	I2CMICR	I2C Master Interrupt Clear	Section 7.3.8
20h	I2CMCR	I2C Master Configuration	Section 7.3.9
24h	I2CMCLKOCNT	I2C Master Clock Low Timeout Count	Section 7.3.10
2Ch	I2CMBMON	I2C Master Bus Monitor	Section 7.3.11
30h	I2CMBLEN	I2C Master Burst Length	Section 7.3.12
34h	I2CMBCNT	I2C Master Burst Count	Section 7.3.13
800h	I2CSOAR	I2C Slave Own Address	Section 7.3.14
804h	I2CSCSR	I2C Slave Control/Status	Section 7.3.15
808h	I2CSDR	I2C Slave Data	Section 7.3.16
80Ch	I2CSIMR	I2C Slave Interrupt Mask	Section 7.3.17
810h	I2CSRIS	I2C Slave Raw Interrupt Status	Section 7.3.18
814h	I2CSMIS	I2C Slave Masked Interrupt Status	Section 7.3.19
818h	I2CSICR	I2C Slave Interrupt Clear	Section 7.3.20
81Ch	I2CSOAR2	I2C Slave Own Address 2	Section 7.3.21
820h	I2CSACKCTL	I2C Slave ACK Control	Section 7.3.22
F00h	I2CFIFODATA	I2C FIFO Data	Section 7.3.23
F04h	I2CFIFOCTL	I2C FIFO Control	Section 7.3.24
F08h	I2CFIFOSTATUS	I2C FIFO Status	Section 7.3.25
FC0h	I2CPP	I2C Peripheral Properties	Section 7.3.26
FC4h	I2CPC	I2C Peripheral Configuration	Section 7.3.27

Copyright © 2017, Texas Instruments Incorporated

7.3.1 I2CMSA Register (Offset = 0h) [reset = 0h]

I2CMSA is shown in Figure 7-14 and described in Table 7-4.

Return to Summary Table.

This register consists of eight bits: seven address bits (A6-A0), and a Receive/Send bit, which determines if the next operation is a Receive (High), or Transmit (Low).

Figure 7-14. I2CMSA Register

31	30	29	28	27	26	25	24	23	22	21	20	19	18	17	16
RESERVED															
R-0h															
15	14	13	12	11	10	9	8	7	6	5	4	3	2	1	0
RESERVED								SA							R_S
R-0h								R/W-0h							R/W-0h

LEGEND: R/W = Read/Write; R = Read only; W1toCl = Write 1 to clear bit; *-n* = value after reset

Table 7-4. I2CMSA Register Field Descriptions

Bit	Field	Type	Reset	Description
31-8	RESERVED	R	0h	
7-1	SA	R/W	0h	I^2C Slave Address This field specifies bits A6 through A0 of the slave address.
0	R_S	R/W	0h	Receive/Send The R/S bit specifies if the next master operation is a Receive (High) or Transmit (Low). 0h = Transmit 1h = Receive

Copyright © 2017, Texas Instruments Incorporated

7.3.2 I2CMCS Register (Offset = 4h) [reset = 20h]

I2CMCS is shown in Figure 7-15 and described in Table 7-5.

Return to Summary Table.

Figure 7-15. I2CMCS Register

31	30	29	28	27	26	25	24
ACTDMARX	ACTDMATX	RESERVED					
R/W-0h	R-0h	R-0h					
23	22	21	20	19	18	17	16
RESERVED							
R-0h							
15	14	13	12	11	10	9	8
RESERVED							
R-0h							
7	6	5	4	3	2	1	0
CLKTO	BUSBSY_OR_BURST	IDLE_OR_QCMD	ARBLST_OR_HS	DATACK_OR_ACK	ADRACK_OR_STOP	ERROR_OR_START	BUSY_OR_RUN
R/W-0h	R/W-0h	R/W-1h	R/W-0h	R/W-0h	R/W-0h	R/W-0h	R/W-0h

LEGEND: R/W = Read/Write; R = Read only; W1toCl = Write 1 to clear bit; *-n* = value after reset

Table 7-5. I2CMCS Register Field Descriptions

Bit	Field	Type	Reset	Description
31	ACTDMARX	R/W	0h	DMA RX Active Status 0h (R) = DMA RX is not active 1h (R) = DMA RX is active
30	ACTDMATX	R	0h	DMA TX Active Status 0h (R) = DMA TX is not active 1h (R) = DMA TX is active.
29-8	RESERVED	R	0h	
7	CLKTO	R/W	0h	Clock Timeout Error This bit is cleared when the master sends a STOP condition or if the I2C master is reset. 0h (R) = No clock timeout error. 1h (R) = The clock timeout error has occurred.
6	BUSBSY_OR_BURST	R/W	0h	Bus Busy (R) or Burst Enable (W) The bit changes based on the START and STOP conditions. 0h (W) = Burst operation is disabled. 0h (R) = The I2C bus is idle. 1h (W) = The master is enabled to burst using the receive and transmit FIFOs. 1h (R) = The I2C bus is busy. Note that the BURST and RUN bits are mutually exclusive.
5	IDLE_OR_QCMD	R/W	1h	I2C Idle (R) or Quick Command (W) To execute a quick command, the START, STOP and RUN bits must also be set. After the quick command is issued, the master generates a STOP. 0h (W) = Bus transaction is not a quick command. 0h (R) = The I2C controller is not idle. 1h (W) = The bus transaction is a quick command. 1h (R) = The I2C controller is idle.

Copyright © 2017, Texas Instruments Incorporated

Table 7-5. I2CMCS Register Field Descriptions (continued)

Bit	Field	Type	Reset	Description
4	ARBLST_OR_HS	R/W	0h	Arbitration Lost (R) or Reserved (High-Speed Enable Not Supported) (W) 0h (W) = The master operates in Standard or Fast mode as selected by using a value in the I2CMTPR register that results in an SCL frequency of 100 kbps for standard mode, or 400 kbps for fast mode. 0h (R) = The I2C controller won arbitration. 1h (R) = The I2C controller lost arbitration.
3	DATACK_OR_ACK	R/W	0h	Acknowledge Data (R) or Data Acknowledge Enable (W) 0h (W) = The received data byte is not acknowledged automatically by the master. 0h (R) = The transmitted data was acknowledged 1h (W) = The received data byte is acknowledged automatically by the master. 1h (R) = The transmitted data was not acknowledged.
2	ADRACK_OR_STOP	R/W	0h	Acknowledge Address (R) or Generate STOP (W) 0h (W) = The controller does not generate the STOP condition. 0h (R) = The transmitted address was acknowledged 1h (W) = The controller generates the STOP condition. 1h (R) = The transmitted address was not acknowledged.
1	ERROR_OR_START	R/W	0h	Error (R) or Generate START (W) The error can be when the slave address is not acknowledged, or when the transmit data is not acknowledged. 0h (W) = The controller does not generate the START condition. 0h (R) = No error was detected on the last operation. 1h (W) = The controller generates the START or repeated START condition. 1h (R) = An error occurred on the last operation.
0	BUSY_OR_RUN	R/W	0h	I2C Busy (R) or I2C Master Enable (W) When the BUSY bit is set, the other status bits are not valid. Note that the BURST and RUN bits are mutually exclusive. 0h (W) = In standard mode, this encoding means the master is unable to transmit or receive data. In Burst mode, this bit is not used and must be set to 0. 0h (R) = The controller is idle. 1h (W) = The master is able to transmit or receive data. Note that this bit cannot be set in burst mode. 1h (R) = The controller is busy.

Copyright © 2017, Texas Instruments Incorporated

Table 7-6. Write Field Decoding for I2CMCS[6:0]

Current State	I2CMSA[0]	I2CMCS[6:0]							Next State Description
	R/S	BURST	QCCMD	HS	ACK	STOP	START	RUN	
Idle	0	0	0	0	X[1]	0	1	1	START condition followed by TRANSMIT (master goes to the Master Transmit state).
	0	0	0	0	X	1	1	1	START condition followed by a TRANSMIT and STOP condition (master remains in Idle state).
	0	1	0	0	X	0	1	0	START condition followed by N FIFO-serviced TRANSMITs (master goes to the Master Transmit state).
	0	1	0	0	X	1	1	0	START condition followed by N FIFO-serviced TRANSMITs and STOP condition (master remains in Idle state).
	1	0	0	0	0	0	1	1	START condition followed by RECEIVE operation with negative ACK (master goes to the Master Receive state).
	0	0	1	0	0	1	1	1	Quick Command (Send). After Quick Command is executed, the master returns to Idle state.
	1	0	1	0	0	1	1	1	Quick Command (Receive). After Quick Command is executed, the master returns to Idle state.
	1	0	0	0	0	1	1	1	START condition followed by RECEIVE and STOP condition (master remains in Idle state).
	1	0	0	0	1	0	1	1	START condition followed by RECEIVE (master goes to the Master Receive state).
	1	1	0	0	0	0	1	0	START condition followed by N FIFO-serviced RECEIVE operations with a negative ACK on the last RECEIVE operation (master goes to the Master Receive state).
	1	1	0	0	0	1	1	0	START condition followed by N FIFO-serviced RECEIVE operations with a negative ACK on the last RECEIVE and STOP condition (master remains in Idle state).
	1	1	0	0	1	0	1	0	START condition followed by N FIFO-serviced RECEIVE operations (master goes to the Master Receive state).
	0	0	0	1	0	0	1	1	START/RUN condition where master byte is sent with no ACK; followed by High Speed transmit Operation. All subsequent transfers are carried out using normal transmit commands.
	0	1	0	1	0	0	0	0	RUN/BURST condition where master byte is sent with no ACK; followed by High Speed Burst transmit Operation.
	1	0	0	0	1	1	1	1	Illegal
	1	0	0	0	1	1	1	0	Illegal

(1) An X in a table cell indicates the bit can be 0 or 1.

Copyright © 2017, Texas Instruments Incorporated

Table 7-6. Write Field Decoding for I2CMCS[6:0] (continued)

Current State	I2CMSA[0]	I2CMCS[6:0]							Next State Description
	R/S	BURST	QCCMD	HS	ACK	STOP	START	RUN	
Master Transmit	X	0	0	0	X	0	0	1	TRANSMIT operation (master remains in Master Transmit state).
	X	0	0	0	X	1	0	0	STOP condition (master goes to Idle state).
	X	0	0	0	X	1	0	1	TRANSMIT followed by STOP condition (master goes to Idle state).
	X	1	0	0	X	0	0	0	N FIFO-serviced TRANSMIT operations (master remains in Master Transmit state).
	X	1	0	0	X	1	0	0	N FIFO-serviced TRANSMIT operations followed by STOP condition (master goes to Idle state).
	0	0	0	0	X	0	1	1	Repeated START condition followed by a TRANSMIT (master remains in Master Transmit state).
	0	0	0	0	X	1	1	1	Repeated START condition followed by TRANSMIT and STOP condition (master goes to Idle state).
	0	1	0	0	X	0	1	0	Repeated START condition followed by N FIFO-serviced TRANSMIT operations (master remains in Master Transmit state).
	0	1	0	0	X	1	1	0	Repeated START condition followed by N FIFO-serviced TRANSMIT operations and STOP condition (master goes to Idle state).
	1	0	0	0	0	0	1	1	Repeated START condition followed by a RECEIVE operation with a negative ACK (master goes to Master Receive state).
	1	0	0	0	0	1	1	1	Repeated START condition followed by a RECEIVE and STOP condition (master goes to Idle state).
	1	0	0	0	1	0	1	1	Repeated START condition followed by RECEIVE (master goes to Master Receive state).
	1	1	0	0	0	0	1	0	Repeated START condition followed by N FIFO-serviced RECEIVE operations with a negative ACK on the last RECEIVE operation (master goes to Master Receive state).
	1	1	0	0	0	1	1	0	Repeated START condition followed by N FIFO-serviced RECEIVE operations and STOP condition (master goes to Idle state).
	1	1	0	0	1	0	1	0	Repeated START condition followed by N FIFO-serviced RECEIVE operations (master goes to Master Receive state).
	1	0	0	0	1	1	1	1	Illegal
	1	1	0	0	1	1	1	0	Illegal

Copyright © 2017, Texas Instruments Incorporated

Table 7-6. Write Field Decoding for I2CMCS[6:0] (continued)

Current State	I2CMSA[0]	I2CMCS[6:0]							Next State Description
	R/S	BURST	QCCMD	HS	ACK	STOP	START	RUN	
Master Receive	X	0	0	0	0	0	0	1	RECEIVE operation with negative ACK (master remains in Master Receive state).
	X	0	0	0	X	1	0	0	STOP condition (master goes to Idle state).(2)
	X	0	0	0	0	1	0	1	RECEIVE followed by STOP condition (master goes to Idle state).
	X	0	0	0	1	0	0	1	RECEIVE operation (master remains in Master Receive state).
	X	1	0	0	0	0	0	0	N FIFO-serviced RECEIVE operations with negative ACK on the last RECEIVE (master remains in Master Receive state).
	X	1	0	0	0	1	0	0	N FIFO-serviced RECEIVE operations followed by STOP condition (master goes to Idle state).
	X	1	0	0	1	0	0	0	N FIFO-serviced RECEIVE operations (master remains in Master Receive state).
	X	0	0	0	1	1	0	1	Illegal
	X	1	0	0	1	1	0	0	Illegal
	1	0	0	0	0	0	1	1	Repeated START condition followed by RECEIVE operation with a negative ACK (master remains in Master Receive state).
	1	0	0	0	0	1	1	1	Repeated START condition followed by RECEIVE and STOP condition (master goes to Idle state).
	1	0	0	0	1	0	1	1	Repeated START condition followed by RECEIVE (master remains in Master Receive state).
	1	1	0	0	0	0	1	0	Repeated START condition followed by N FIFO-serviced RECEIVE operations with a negative ACK on the last RECEIVE (master remains in Master Receive state).
	1	1	0	0	0	1	1	0	Repeated START condition followed by N FIFO-serviced RECEIVE operations and STOP condition (master goes to Idle state).
	1	1	0	0	1	0	1	0	Repeated START condition followed by N FIFO-serviced RECEIVE operations (master remains in Master Receive state).
	0	0	0	0	X	0	1	1	Repeated START condition followed by TRANSMIT (master goes to Master Transmit state).
	0	0	0	0	X	1	1	1	Repeated START condition followed by TRANSMIT and STOP condition (master goes to Idle state).
	0	1	0	0	X	0	1	0	Repeated START condition followed by N FIFO-serviced TRANSMIT operations (master goes to Master Transmit state).
	0	1	0	0	X	1	1	0	Repeated START condition followed by N FIFO-serviced TRANSMIT operations and STOP condition (master goes to Idle state).
All other combinations not listed are non-operations.									NOP

(2) In Master Receive mode, a STOP condition should be generated only after a Data Negative Acknowledge executed by the master, or an Address Negative Acknowledge executed by the slave.

Copyright © 2017, Texas Instruments Incorporated

7.3.3 I2CMDR Register (Offset = 8h) [reset = 0h]

I2CMDR is shown in Figure 7-16 and described in Table 7-7.

Return to Summary Table.

This register contains the data to be transmitted when in the master transmit state and the data received when in the master receive state. If the BURST bit is enabled in the I2CMCS register, then the I2CFIFODATA register is used for the current data transmit or receive value and this register is ignored.

NOTE: This register is read-sensitive. See the register description for details.

Figure 7-16. I2CMDR Register

31	30	29	28	27	26	25	24	23	22	21	20	19	18	17	16	15	14	13	12	11	10	9	8	7	6	5	4	3	2	1	0
RESERVED																								DATA							
R-0h																								R/W-0h							

LEGEND: R/W = Read/Write; R = Read only; W1toCl = Write 1 to clear bit; *-n* = value after reset

Table 7-7. I2CMDR Register Field Descriptions

Bit	Field	Type	Reset	Description
31-8	RESERVED	R	0h	
7-0	DATA	R/W	0h	This byte contains the data transferred during a transaction.

Copyright © 2017, Texas Instruments Incorporated

7.3.4 I2CMTPR Register (Offset = Ch) [reset = 1h]

I2CMTPR is shown in Figure 7-17 and described in Table 7-8.

Return to Summary Table.

This register is programmed to set the timer period for the SCL clock and assign the SCL clock to standard.

Figure 7-17. I2CMTPR Register

31	30	29	28	27	26	25	24	23	22	21	20	19	18	17	16
RESERVED													PULSEL		
R-0h													R/W-0h		
15	14	13	12	11	10	9	8	7	6	5	4	3	2	1	0
RESERVED									TPR						
R-0h									R/W-1h						

LEGEND: R/W = Read/Write; R = Read only; W1toCl = Write 1 to clear bit; -*n* = value after reset

Table 7-8. I2CMTPR Register Field Descriptions

Bit	Field	Type	Reset	Description
31-19	RESERVED	R	0h	
18-16	PULSEL	R/W	0h	Glitch Suppression Pulse Width This field controls the pulse width select for glitch suppression on the SCL and SDA lines. The following values are the glitch suppression values in terms of system clocks. 0h = Bypass 1h = 1 clock 2h = 2 clocks 3h = 3 clocks 4h = 4 clocks 5h = 8 clocks 6h = 16 clocks 7h = 31 clocks
15-7	RESERVED	R	0h	
6-0	TPR	R/W	1h	Timer Period This field is used in the equation to configure SCL_PERIOD: SCL_PERIOD = 2 -(1 + TPR) -(SCL_LP + SCL_HP) -CLK_PRD where: SCL_PRD is the SCL line period (I2C clock) TPR is the Timer Period register value (range of 1 to 127) SCL_LP is the SCL Low period (fixed at 6) SCL_HP is the SCL High period (fixed at 4) CLK_PRD is the system clock period in ns.

Copyright © 2017, Texas Instruments Incorporated

7.3.5 I2CMIMR Register (Offset = 10h) [reset = 0h]

I2CMIMR is shown in Figure 7-18 and described in Table 7-9.

Return to Summary Table.

This register controls whether a raw interrupt is promoted to a controller interrupt.

Figure 7-18. I2CMIMR Register

31	30	29	28	27	26	25	24
RESERVED							
R-0h							
23	22	21	20	19	18	17	16
RESERVED							
R-0h							
15	14	13	12	11	10	9	8
RESERVED				RXFFIM	TXFEIM	RXIM	TXIM
R-0h				R/W-0h	R/W-0h	R/W-0h	R/W-0h
7	6	5	4	3	2	1	0
ARBLOSTIM	STOPIM	STARTIM	NACKIM	DMATXIM	DAMRXIM	CLKIM	IM
R/W-0h	R/W-0h	R/W-0h	R/W-0h	R/W-0h	R/W-0h	R/W-0h	R/W-0h

LEGEND: R/W = Read/Write; R = Read only; W1toCl = Write 1 to clear bit; *-n* = value after reset

Table 7-9. I2CMIMR Register Field Descriptions

Bit	Field	Type	Reset	Description
31-12	RESERVED	R	0h	
11	RXFFIM	R/W	0h	Receive FIFO Full Interrupt Mask 0h = The RXFFRIS interrupt is suppressed and not sent to the interrupt controller. 1h = The Receive FIFO Full interrupt is sent to the interrupt controller when the RXFFRIS bit in the I2CMRIS register is set.
10	TXFEIM	R/W	0h	Transmit FIFO Empty Interrupt Mask Note: The TXFEIM interrupt mask bit in the I2CMIMR register should be clear (masking the TXFE interrupt) when the master is performing an RX Burst from the RXFIFO and should be unmasked before starting a TX FIFO transfers. 0h = The TXFERIS interrupt is suppressed and not sent to the interrupt controller. 1h = The Transmit FIFO Empty interrupt is sent to the interrupt controller when the TXFERIS bit in the I2CMRIS register is set.
9	RXIM	R/W	0h	Receive FIFO Request Interrupt Mask 0h = The RXRIS interrupt is suppressed and not sent to the interrupt controller. 1h = The RX FIFO Request interrupt is sent to the interrupt controller when the RXRIS bit in the I2CMRIS register is set.
8	TXIM	R/W	0h	Transmit FIFO Request Interrupt Mask 0h = The TXRIS interrupt is suppressed and not sent to the interrupt controller. 1h = The TX FIFO Request interrupt is sent to the interrupt controller when the TXRIS bit in the I2CMRIS register is set.
7	ARBLOSTIM	R/W	0h	Transmit FIFO Request Interrupt Mask 0h = The TXRIS interrupt is suppressed and not sent to the interrupt controller. 1h = The TX FIFO Request interrupt is sent to the interrupt controller when the TXRIS bit in the I2CMRIS register is set.

Copyright © 2017, Texas Instruments Incorporated

Table 7-9. I2CMIMR Register Field Descriptions (continued)

Bit	Field	Type	Reset	Description
6	STOPIM	R/W	0h	STOP Detection Interrupt Mask 0h = The STOPRIS interrupt is suppressed and not sent to the interrupt controller. 1h = The STOP detection interrupt is sent to the interrupt controller when the STOPRIS bit in the I2CMRIS register is set.
5	STARTIM	R/W	0h	START Detection Interrupt Mask 0h = The STARTRIS interrupt is suppressed and not sent to the interrupt controller. 1h = The START detection interrupt is sent to the interrupt controller when the STARTRIS bit in the I2CMRIS register is set.
4	NACKIM	R/W	0h	Address/Data NACK Interrupt Mask 0h = The NACKRIS interrupt is suppressed and not sent to the interrupt controller. 1h = The address/data NACK interrupt is sent to the interrupt controller when the NACKRIS bit in the I2CMRIS register is set.
3	DMATXIM	R/W	0h	Transmit DMA Interrupt Mask 0h = The DMATXRIS interrupt is suppressed and not sent to the interrupt controller. 1h = The transmit DMA complete interrupt is sent to the interrupt controller when the DMATXRIS bit in the I2CMRIS register is set.
2	DAMRXIM	R/W	0h	Receive DMA Interrupt Mask 0h = The DMARXRIS interrupt is suppressed and not sent to the interrupt controller. 1h = The receive DMA complete interrupt is sent to the interrupt controller when the DMARXRIS bit in the I2CMRIS register is set.
1	CLKIM	R/W	0h	Clock Timeout Interrupt Mask 0h = The CLKRIS interrupt is suppressed and not sent to the interrupt controller. 1h = The clock timeout interrupt is sent to the interrupt controller when the CLKRIS bit in the I2CMRIS register is set.
0	IM	R/W	0h	Master Interrupt Mask 0h = The RIS interrupt is suppressed and not sent to the interrupt controller. 1h = The master interrupt is sent to the interrupt controller when the RIS bit in the I2CMRIS register is set.

Copyright © 2017, Texas Instruments Incorporated

7.3.6 I2CMRIS Register (Offset = 14h) [reset = 0h]

I2CMRIS is shown in Figure 7-19 and described in Table 7-10.

Return to Summary Table.

This register specifies whether an interrupt is pending.

Figure 7-19. I2CMRIS Register

31	30	29	28	27	26	25	24
RESERVED							
R-0h							
23	22	21	20	19	18	17	16
RESERVED							
R-0h							
15	14	13	12	11	10	9	8
RESERVED				RXFFRIS	TXFERIS	RXRIS	TXRIS
R-0h				R-0h	R-0h	R-0h	R-0h
7	6	5	4	3	2	1	0
ARBLOSTRIS	STOPRIS	STARTRIS	NACKRIS	DMATXRIS	DMARXRIS	CLKRIS	RIS
R-0h	R-0h	R-0h	R-0h	R-0h	R-0h	R-0h	R-0h

LEGEND: R/W = Read/Write; R = Read only; W1toCl = Write 1 to clear bit; *-n* = value after reset

Table 7-10. I2CMRIS Register Field Descriptions

Bit	Field	Type	Reset	Description
31-12	RESERVED	R	0h	
11	RXFFRIS	R	0h	Receive FIFO Full Raw Interrupt Status This bit is cleared by writing a 1 to the RXFFIC bit in the I2CMICR register. 0h = No interrupt 1h = The Receive FIFO Full interrupt is pending.
10	TXFERIS	R	0h	Transmit FIFO Empty Raw Interrupt Status This bit is cleared by writing a 1 to the TXFEIC bit in the I2CMICR register. 0h = No interrupt 1h = The Transmit FIFO Empty interrupt is pending. Note that if the TXFERIS interrupt is cleared (by setting the TXFEIC bit) when the TX FIFO is empty, the TXFERIS interrupt does not reassert, even though the TX FIFO remains empty in this situation.
9	RXRIS	R	0h	Receive FIFO Request Raw Interrupt Status This bit is cleared by writing a 1 to the RXIC bit in the I2CMICR register. 0h = No interrupt 1h = The trigger level for the RX FIFO has been reached or there is data in the FIFO and the burst count is zero. Thus, a RX FIFO request interrupt is pending.
8	TXRIS	R	0h	Transmit Request Raw Interrupt Status This bit is cleared by writing a 1 to the TXIC bit in the I2CMICR register. 0h = No interrupt 1h = The trigger level for the TX FIFO has been reached and more data is needed to complete the burst. Thus, a TX FIFO request interrupt is pending.

Copyright © 2017, Texas Instruments Incorporated

Table 7-10. I2CMRIS Register Field Descriptions (continued)

Bit	Field	Type	Reset	Description
7	ARBLOSTRIS	R	0h	Arbitration Lost Raw Interrupt Status This bit is cleared by writing a 1 to the ARBLOSTIC bit in the I2CMICR register. 0h = No interrupt 1h = The Arbitration Lost interrupt is pending.
6	STOPRIS	R	0h	STOP Detection Raw Interrupt Status This bit is cleared by writing a 1 to the STOPIC bit in the I2CMICR register. 0h = No interrupt 1h = The STOP Detection interrupt is pending.
5	STARTRIS	R	0h	START Detection Raw Interrupt Status This bit is cleared by writing a 1 to the STARTIC bit in the I2CMICR register. 0h = No interrupt 1h = The START Detection interrupt is pending.
4	NACKRIS	R	0h	Address/Data NACK Raw Interrupt Status This bit is cleared by writing a 1 to the NACKIC bit in the I2CMICR register. 0h = No interrupt 1h = The address/data NACK interrupt is pending.
3	DMATXRIS	R	0h	Transmit DMA Raw Interrupt Status This bit is cleared by writing a 1 to the DMATXIC bit in the I2CMICR register. 0h = No interrupt. 1h = The transmit DMA complete interrupt is pending.
2	DMARXRIS	R	0h	Receive DMA Raw Interrupt Status This bit is cleared by writing a 1 to the DMARXIC bit in the I2CMICR register. 0h = No interrupt. 1h = The receive DMA complete interrupt is pending.
1	CLKRIS	R	0h	Clock Timeout Raw Interrupt Status This bit is cleared by writing a 1 to the CLKIC bit in the I2CMICR register. 0h = No interrupt. 1h = The clock timeout interrupt is pending.
0	RIS	R	0h	Master Raw Interrupt Status This interrupt includes: Master transaction completed Next byte transfer request This bit is cleared by writing a 1 to the IC bit in the I2CMICR register. 0h = No interrupt. 1h = A master interrupt is pending.

Copyright © 2017, Texas Instruments Incorporated

7.3.7 I2CMMIS Register (Offset = 18h) [reset = 0h]

I2CMMIS is shown in Figure 7-20 and described in Table 7-11.

Return to Summary Table.

This register specifies whether an interrupt was signaled.

Figure 7-20. I2CMMIS Register

31	30	29	28	27	26	25	24
RESERVED							
R-0h							
23	22	21	20	19	18	17	16
RESERVED							
R-0h							
15	14	13	12	11	10	9	8
RESERVED				RXFFMIS	TXFEMIS	RXMIS	TXMIS
R-0h				R-0h	R-0h	R-0h	R-0h
7	6	5	4	3	2	1	0
ARBLOSTMIS	STOPMIS	STARTMIS	NACKMIS	DMATXMIS	DMARXMIS	CLKMIS	MIS
R-0h	R-0h	R-0h	R-0h	R-0h	R-0h	R-0h	R-0h

LEGEND: R/W = Read/Write; R = Read only; W1toCl = Write 1 to clear bit; *-n* = value after reset

Table 7-11. I2CMMIS Register Field Descriptions

Bit	Field	Type	Reset	Description
31-12	RESERVED	R	0h	
11	RXFFMIS	R	0h	Receive FIFO Full Interrupt Mask This bit is cleared by writing a 1 to the RXFFIC bit in the I2CMICR register. 0h = No interrupt. 1h = An unmasked Receive FIFO Full interrupt was signaled and is pending.
10	TXFEMIS	R	0h	Transmit FIFO Empty Interrupt Mask This bit is cleared by writing a 1 to the TXFEIC bit in the I2CMICR register. 0h = No interrupt. 1h = An unmasked Transmit FIFO Empty interrupt was signaled and is pending.
9	RXMIS	R	0h	Receive FIFO Request Interrupt Mask This bit is cleared by writing a 1 to the RXIC bit in the I2CMICR register. 0h = No interrupt. 1h = An unmasked Receive FIFO Request interrupt was signaled and is pending.
8	TXMIS	R	0h	Transmit Request Interrupt Mask This bit is cleared by writing a 1 to the TXIC bit in the I2CMICR register. 0h = No interrupt. 1h = An unmasked Transmit FIFO Request interrupt was signaled and is pending.
7	ARBLOSTMIS	R	0h	Arbitration Lost Interrupt Mask This bit is cleared by writing a 1 to the ARBLOSTIC bit in the I2CMICR register. 0h = No interrupt. 1h = An unmasked Arbitration Lost interrupt was signaled and is pending.

Copyright © 2017, Texas Instruments Incorporated

Table 7-11. I2CMMIS Register Field Descriptions (continued)

Bit	Field	Type	Reset	Description
6	STOPMIS	R	0h	STOP Detection Interrupt Mask This bit is cleared by writing a 1 to the STOPIC bit in the I2CMICR register. 0h = No interrupt. 1h = An unmasked STOP Detection interrupt was signaled and is pending.
5	STARTMIS	R	0h	START Detection Interrupt Mask This bit is cleared by writing a 1 to the STARTIC bit in the I2CMICR register. 0h = No interrupt. 1h = An unmasked START Detection interrupt was signaled and is pending.
4	NACKMIS	R	0h	Address/Data NACK Interrupt Mask This bit is cleared by writing a 1 to the NACKIC bit in the I2CMICR register. 0h = No interrupt. 1h = An unmasked Address/Data NACK interrupt was signaled and is pending.
3	DMATXMIS	R	0h	Transmit DMA Interrupt Status This bit is cleared by writing a 1 to the DMATXIC bit in the I2CMICR register. 0h = No interrupt. 1h = An unmasked transmit DMA complete interrupt was signaled and is pending.
2	DMARXMIS	R	0h	Receive DMA Interrupt Status This bit is cleared by writing a 1 to the DMARXIC bit in the I2CMICR register. 0h = No interrupt. 1h = An unmasked receive DMA complete interrupt was signaled and is pending.
1	CLKMIS	R	0h	Clock Timeout Masked Interrupt Status This bit is cleared by writing a 1 to the CLKIC bit in the I2CMICR register. 0h = No interrupt. 1h = An unmasked clock timeout interrupt was signaled and is pending.
0	MIS	R	0h	Clock Timeout Masked Interrupt Status This bit is cleared by writing a 1 to the CLKIC bit in the I2CMICR register. 0h = No interrupt. 1h = An unmasked clock timeout interrupt was signaled and is pending.

Copyright © 2017, Texas Instruments Incorporated

7.3.8 I2CMICR Register (Offset = 1Ch) [reset = 0h]

I2CMICR is shown in Figure 7-21 and described in Table 7-12.

Return to Summary Table.

This register clears the raw and masked interrupts.

Figure 7-21. I2CMICR Register

31	30	29	28	27	26	25	24
RESERVED							
R-0h							
23	22	21	20	19	18	17	16
RESERVED							
R-0h							
15	14	13	12	11	10	9	8
RESERVED				RXFFIC	TXFEIC	RXIC	TXIC
R-0h				W-0h	W-0h	W-0h	W-0h
7	6	5	4	3	2	1	0
ARBLOSTIC	STOPIC	STARTIC	NACKIC	DMATXIC	DMARXIC	CLKCIC	IC
W-0h	W-0h	W-0h	W-0h	W-0h	W-0h	W-0h	W-0h

LEGEND: R/W = Read/Write; R = Read only; W1toCl = Write 1 to clear bit; *-n* = value after reset

Table 7-12. I2CMICR Register Field Descriptions

Bit	Field	Type	Reset	Description
31-12	RESERVED	R	0h	
11	RXFFIC	W	0h	Receive FIFO Full Interrupt Clear Writing a 1 to this bit clears the RXFFIS bit in the I2CMRIS register and the RXFFMIS bit in the I2CMMIS register. A read of this register returns no meaningful data.
10	TXFEIC	W	0h	Transmit FIFO Empty Interrupt Clear Writing a 1 to this bit clears the TXFERIS bit in the I2CMRIS register and the TXFEMIS bit in the I2CMMIS register. A read of this register returns no meaningful data.
9	RXIC	W	0h	Receive FIFO Request Interrupt Clear Writing a 1 to this bit clears the RXRIS bit in the I2CMRIS register and the RXMIS bit in the I2CMMIS register. A read of this register returns no meaningful data.
8	TXIC	W	0h	Transmit FIFO Request Interrupt Clear Writing a 1 to this bit clears the TXRIS bit in the I2CMRIS register and the TXMIS bit in the I2CMMIS register. A read of this register returns no meaningful data.
7	ARBLOSTIC	W	0h	Arbitration Lost Interrupt Clear Writing a 1 to this bit clears the ARBLOSTRIS bit in the I2CMRIS register and the ARBLOSTMIS bit in the I2CMMIS register. A read of this register returns no meaningful data.
6	STOPIC	W	0h	STOP Detection Interrupt Clear Writing a 1 to this bit clears the STOPRIS bit in the I2CMRIS register and the STOPMIS bit in the I2CMMIS register. A read of this register returns no meaningful data.
5	STARTIC	W	0h	START Detection Interrupt Clear Writing a 1 to this bit clears the STARTRIS bit in the I2CMRIS register and the STARTMIS bit in the I2CMMIS register. A read of this register returns no meaningful data.

Copyright © 2017, Texas Instruments Incorporated

Table 7-12. I2CMICR Register Field Descriptions (continued)

Bit	Field	Type	Reset	Description
4	NACKIC	W	0h	Address/Data NACK Interrupt Clear Writing a 1 to this bit clears the NACKRIS bit in the I2CMRIS register and the NACKMIS bit in the I2CMMIS register. A read of this register returns no meaningful data.
3	DMATXIC	W	0h	Transmit DMA Interrupt Clear Writing a 1 to this bit clears the DMATXRIS bit in the I2CMRIS register and the DMATXMIS bit in the I2CMMIS register. A read of this register returns no meaningful data.
2	DMARXIC	W	0h	Receive DMA Interrupt Clear Writing a 1 to this bit clears the DMARXRIS bit in the I2CMRIS register and the DMARXMIS bit in the I2CMMIS register. A read of this register returns no meaningful data.
1	CLKCIC	W	0h	Clock Timeout Interrupt Clear Writing a 1 to this bit clears the CLKRIS bit in the I2CMRIS register and the CLKMIS bit in the I2CMMIS register. A read of this register returns no meaningful data.
0	IC	W	0h	Master Interrupt Clear Writing a 1 to this bit clears the RIS bit in the I2CMRIS register and the MIS bit in the I2CMMIS register. A read of this register returns no meaningful data.

Copyright © 2017, Texas Instruments Incorporated

7.3.9 I2CMCR Register (Offset = 20h) [reset = 0h]

I2CMCR is shown in Figure 7-22 and described in Table 7-13.

Return to Summary Table.

This register configures the mode (master or slave), and sets the interface for test mode loopback.

Figure 7-22. I2CMCR Register

31	30	29	28	27	26	25	24
RESERVED							
R-0h							
23	22	21	20	19	18	17	16
RESERVED							
R-0h							
15	14	13	12	11	10	9	8
RESERVED							
R-0h							
7	6	5	4	3	2	1	0
RESERVED		SFE	MFE	RESERVED			LPBK
R-0h		R/W-0h	R/W-0h	R-0h			R/W-0h

LEGEND: R/W = Read/Write; R = Read only; W1toCl = Write 1 to clear bit; *-n* = value after reset

Table 7-13. I2CMCR Register Field Descriptions

Bit	Field	Type	Reset	Description
31-6	RESERVED	R	0h	
5	SFE	R/W	0h	I2C Slave Function Enable 0h = Slave mode is disabled. 1h = Slave mode is enabled.
4	MFE	R/W	0h	I2C Master Function Enable 0h = Master mode is disabled. 1h = Master mode is enabled.
3-1	RESERVED	R	0h	
0	LPBK	R/W	0h	I2C Loopback 0h = Normal operation. 1h = The controller in a test mode loopback configuration.

Copyright © 2017, Texas Instruments Incorporated

7.3.10 I2CMCLKOCNT Register (Offset = 24h) [reset = 0h]

I2CMCLKOCNT is shown in Figure 7-23 and described in Table 7-14.

Return to Summary Table.

This register contains the upper 8 bits of a 12-bit counter that can be used to keep the timeout limit for clock stretching by a remote slave. The lower four bits of the counter are not user visible and are always 0x0.

NOTE: The master clock low timeout counter counts for the entire time SCL is held Low continuously. If SCL is de-asserted at any point, the master clock low timeout counter is reloaded with the value in the I2CMCLKOCNT register and begins counting down from this value.

Figure 7-23. I2CMCLKOCNT Register

31	30	29	28	27	26	25	24	23	22	21	20	19	18	17	16	15	14	13	12	11	10	9	8	7	6	5	4	3	2	1	0
RESERVED																								CNTL							
R-0h																								R/W-0h							

LEGEND: R/W = Read/Write; R = Read only; W1toCl = Write 1 to clear bit; *-n* = value after reset

Table 7-14. I2CMCLKOCNT Register Field Descriptions

Bit	Field	Type	Reset	Description
31-8	RESERVED	R	0h	
7-0	CNTL	R/W	0h	I2C Master Count This field contains the upper 8 bits of a 12-bit counter for the clock low timeout count. Note: The value of CNTL must be greater than 0x1.

Copyright © 2017, Texas Instruments Incorporated

7.3.11 I2CMBMON Register (Offset = 2Ch) [reset = 3h]

I2CMBMON is shown in Figure 7-24 and described in Table 7-15.

Return to Summary Table.

This register is used to determine the SCL and SDA signal status.

Figure 7-24. I2CMBMON Register

31	30	29	28	27	26	25	24	23	22	21	20	19	18	17	16
RESERVED															
R-0h															
15	14	13	12	11	10	9	8	7	6	5	4	3	2	1	0
RESERVED														SDA	SCL
R-0h														R-1h	R-1h

LEGEND: R/W = Read/Write; R = Read only; W1toCl = Write 1 to clear bit; *-n* = value after reset

Table 7-15. I2CMBMON Register Field Descriptions

Bit	Field	Type	Reset	Description
31-2	RESERVED	R	0h	
1	SDA	R	1h	I2C SDA Status 0h = The I2CSDA signal is low. 1h = The I2CSDA signal is high.
0	SCL	R	1h	I2C SCL Status 0h = The I2CSCL signal is low. 1h = The I2CSCL signal is high.

Copyright © 2017, Texas Instruments Incorporated

7.3.12 I2CMBLEN Register (Offset = 30h) [reset = 0h]

I2CMBLEN is shown in Figure 7-25 and described in Table 7-16.

Return to Summary Table.

This register contains the programmed length of bytes that are transferred during a burst request.

Figure 7-25. I2CMBLEN Register

31	30	29	28	27	26	25	24	23	22	21	20	19	18	17	16	15	14	13	12	11	10	9	8	7	6	5	4	3	2	1	0
RESERVED																								CNTL							
R-0h																								R/W-0h							

LEGEND: R/W = Read/Write; R = Read only; W1toCl = Write 1 to clear bit; *-n* = value after reset

Table 7-16. I2CMBLEN Register Field Descriptions

Bit	Field	Type	Reset	Description
31-8	RESERVED	R	0h	
7-0	CNTL	R/W	0h	I2C Burst Length This field contains the programmed length of bytes of the burst transaction. If BURST is enabled, this register must be set to a non-zero value, otherwise an error will occur.

Copyright © 2017, Texas Instruments Incorporated

7.3.13 I2CMBCNT Register (Offset = 34h) [reset = 0h]

I2CMBCNT is shown in Figure 7-26 and described in Table 7-17.

Return to Summary Table.

When BURST is active, the value in the I2CMBLEN register is copied into this register and decremented during the BURST transaction. This register can be used to determine the number of transfers that occurred when a BURST terminates early (as a result of a data NACK). When a BURST completes successfully, this register will contain 0.

Figure 7-26. I2CMBCNT Register

31	30	29	28	27	26	25	24	23	22	21	20	19	18	17	16	15	14	13	12	11	10	9	8	7	6	5	4	3	2	1	0
RESERVED																								CNTL							
R-0h																								Ro-0h							

LEGEND: R/W = Read/Write; R = Read only; W1toCl = Write 1 to clear bit; *-n* = value after reset

Table 7-17. I2CMBCNT Register Field Descriptions

Bit	Field	Type	Reset	Description
31-8	RESERVED	R	0h	
7-0	CNTL	Ro	0h	I2C Master Burst Count This field contains the current count-down value of the BURST transaction.

Copyright © 2017, Texas Instruments Incorporated

7.3.14 I2CSOAR Register (Offset = 800h) [reset = 0h]

I2CSOAR is shown in Figure 7-27 and described in Table 7-18.

Return to Summary Table.

This register consists of seven address bits that identify the TM4E111BE6ZRB I2C device on the I2C bus.

Figure 7-27. I2CSOAR Register

31	30	29	28	27	26	25	24	23	22	21	20	19	18	17	16	15	14	13	12	11	10	9	8	7	6	5	4	3	2	1	0
RESERVED																									OAR						
R-0h																									R/W-0h						

LEGEND: R/W = Read/Write; R = Read only; W1toCl = Write 1 to clear bit; *-n* = value after reset

Table 7-18. I2CSOAR Register Field Descriptions

Bit	Field	Type	Reset	Description
31-7	RESERVED	R	0h	
6-0	OAR	R/W	0h	I2C Slave Own Address This field specifies bits A6 through A0 of the slave address.

Copyright © 2017, Texas Instruments Incorporated

7.3.15 I2CSCSR Register (Offset = 804h) [reset = 0h]

I2CSCSR is shown in Figure 7-28 and described in Table 7-19.

Return to Summary Table.

This register functions as a control register when written, and a status register when read.

Figure 7-28. I2CSCSR Register

31	30	29	28	27	26	25	24
ACTDMARX	ACTDMATX	RESERVED					
R-0h	R-0h	R-0h					
23	22	21	20	19	18	17	16
RESERVED							
R-0h							
15	14	13	12	11	10	9	8
RESERVED							
R-0h							
7	6	5	4	3	2	1	0
RESERVED		QCMDRW	QCMDST	OAR2SEL	FBR_OR_RXFIFO	TREQ_OR_TXFIFO	RREQ_OR_DA
R-0h		RC-0h	RC-0h	RO-0h	R/W-0h	R/W-0h	R/W-0h

LEGEND: R/W = Read/Write; R = Read only; W1toCl = Write 1 to clear bit; *-n* = value after reset

Table 7-19. I2CSCSR Register Field Descriptions

Bit	Field	Type	Reset	Description
31	ACTDMARX	R	0h	DMA RX Active Status 0h (R) = DMA RX is not active 1h (R) = DMA RX is active.
30	ACTDMATX	R	0h	DMA RX Active Status 0h (R) = DMA RX is not active 1h (R) = DMA RX is active.
29-6	RESERVED	R	0h	
5	QCMDRW	RC	0h	Quick Command Read / Write This bit only has meaning when the QCMDST bit is set. 0h (R) = Quick command was a write 1h (R) = Quick command was a read
4	QCMDST	RC	0h	Quick Command Status 0h (R) = The last transaction was a normal transaction or a transaction has not occurred. 1h (R) = The last transaction was a Quick Command transaction.
3	OAR2SEL	RO	0h	OAR2 Address Matched This bit is reevaluated after every address comparison. 0h (R) = Either the address is not matched or the match is in legacy mode. 1h (R) = OAR2 address matched and ACKed by the slave.
2	FBR_OR_RXFIFO	R/W	0h	First Byte Received (R) or RX FIFO Enable This bit is only valid when the RREQ bit is set and is automatically cleared when data has been read from the I2CSDR register. 0h (W) = Disables RX FIFO 0h (R) = The first byte has not been received. 1h (W) = Enables RX FIFO 1h (R) = The first byte following the slave s own address has been received. Note: This bit is not used for slave transmit operations.

Copyright © 2017, Texas Instruments Incorporated

Table 7-19. I2CSCSR Register Field Descriptions (continued)

Bit	Field	Type	Reset	Description
1	TREQ_OR_TXFIFO	R/W	0h	Transmit Request (R) or TX FIFO Enable (W) 0h (W) = Disables TX FIFO 0h (R) = No outstanding transmit request. 1h (W) = Enables TX FIFO 1h (R) = The I2C controller has been addressed as a slave transmitter and is using clock stretching to delay the master until data has been written to the I2CSDR register.
0	RREQ_OR_DA	R/W	0h	Receive Request (R) or Device Active (W) Once this bit has been set, it should not be set again unless it has been cleared by writing a 0 or by a reset, otherwise transfer failures may occur. 0h (W) = Disables the I2C slave operation. 0h (R) = No outstanding receive data. 1h (W) = Enables the I2C slave operation. 1h (R) = The I2C controller has outstanding receive data from the I2C master and is using clock stretching to delay the master until the data has been read from the I2CSDR register.

Copyright © 2017, Texas Instruments Incorporated

7.3.16 I2CSDR Register (Offset = 808h) [reset = 0h]

I2CSDR is shown in Figure 7-29 and described in Table 7-20.

Return to Summary Table.

NOTE: This register is read-sensitive. See the register description for details.

This register contains the data to be transmitted when in the slave transmit state, and the data received when in the slave receive state. If the RXFIFO bit or TXFIFO bit are enabled in the I2CSCSR register, then this register is ignored and the data value being transferred from the FIFO is contained in the I2CFIFODATA register.

NOTE: Best practice recommends that an application should not switch between the I2CSDR register and TX FIFO, or vice versa for successive transactions.

Figure 7-29. I2CSDR Register

31	30	29	28	27	26	25	24	23	22	21	20	19	18	17	16	15	14	13	12	11	10	9	8	7	6	5	4	3	2	1	0
RESERVED																								DATA							
R-0h																								R/W-0h							

LEGEND: R/W = Read/Write; R = Read only; W1toCl = Write 1 to clear bit; *-n* = value after reset

Table 7-20. I2CSDR Register Field Descriptions

Bit	Field	Type	Reset	Description
31-8	RESERVED	R	0h	
7-0	DATA	R/W	0h	Data for Transfer This field contains the data for transfer during a slave receive or transmit operation.

Copyright © 2017, Texas Instruments Incorporated

7.3.17 I2CSIMR Register (Offset = 80Ch) [reset = 0h]

I2CSIMR is shown in Figure 7-30 and described in Table 7-21.

Return to Summary Table.

This register controls whether a raw interrupt is promoted to a controller interrupt.

Figure 7-30. I2CSIMR Register

31	30	29	28	27	26	25	24
RESERVED							
R-0h							
23	22	21	20	19	18	17	16
RESERVED							
R-0h							
15	14	13	12	11	10	9	8
RESERVED							RXFFIM
R-0h							R/W-0h
7	6	5	4	3	2	1	0
TXFEIM	RXIM	TXIM	DMATXIM	DMARXIM	STOPIM	STARTIM	DATAIM
R/W-0h	R/W-0h	R/W-0h	R/W-0h	R/W-0h	R/W-0h	R/W-0h	R/W-0h

LEGEND: R/W = Read/Write; R = Read only; W1toCl = Write 1 to clear bit; *-n* = value after reset

Table 7-21. I2CSIMR Register Field Descriptions

Bit	Field	Type	Reset	Description
31-9	RESERVED	R	0h	
8	RXFFIM	R/W	0h	Receive FIFO Full Interrupt Mask 0h = The RXFFRIS interrupt is suppressed and not sent to the interrupt controller. 1h = The Receive FIFO Full interrupt is sent to the interrupt controller when the RXFFRIS bit in the I2CSRIS register is set.
7	TXFEIM	R/W	0h	Transmit FIFO Empty Interrupt Mask 0h = The TXFERIS interrupt is suppressed and not sent to the interrupt controller. 1h = The Transmit FIFO Empty interrupt is sent to the interrupt controller when the TXFERIS bit in the I2CSRIS register is set.
6	RXIM	R/W	0h	Receive FIFO Request Interrupt Mask 0h = The RXRIS interrupt is suppressed and not sent to the interrupt controller. 1h = The RX FIFO Request interrupt is sent to the interrupt controller when the RXRIS bit in the I2CSRIS register is set.
5	TXIM	R/W	0h	Transmit FIFO Request Interrupt 0h = The TXRIS interrupt is suppressed and not sent to the interrupt controller. 1h = The TX FIFO Request interrupt is sent to the interrupt controller when the TXRIS bit in the I2CSRIS register is set.
4	DMATXIM	R/W	0h	Transmit DMA Interrupt Mask 0h = The DMATXRIS interrupt is suppressed and not sent to the interrupt controller. 1h = The transmit DMA complete interrupt is sent to the interrupt controller when the DMATXRIS bit in the I2CSRIS register is set.
3	DMARXIM	R/W	0h	Receive DMA Interrupt Mask 0h = The DMARXRIS interrupt is suppressed and not sent to the interrupt controller. 1h = The receive DMA complete interrupt is sent to the interrupt controller when the DMARXRIS bit in the I2CSRIS register is set.

Copyright © 2017, Texas Instruments Incorporated

Table 7-21. I2CSIMR Register Field Descriptions (continued)

Bit	Field	Type	Reset	Description
2	STOPIM	R/W	0h	Stop Condition Interrupt Mask 0h = The STOPRIS interrupt is suppressed and not sent to the interrupt controller. 1h = The STOP condition interrupt is sent to the interrupt controller when the STOPRIS bit in the I2CSRIS register is set.
1	STARTIM	R/W	0h	Start Condition Interrupt Mask 0h = The STARTRIS interrupt is suppressed and not sent to the interrupt controller. 1h = The START condition interrupt is sent to the interrupt controller when the STARTRIS bit in the I2CSRIS register is set.
0	DATAIM	R/W	0h	Data Interrupt Mask 0h = The DATARIS interrupt is suppressed and not sent to the interrupt controller. 1h = Data interrupt sent to interrupt controller when DATARIS bit in the I2CSRIS register is set.

Copyright © 2017, Texas Instruments Incorporated

7.3.18 I2CSRIS Register (Offset = 810h) [reset = 0h]

I2CSRIS is shown in Figure 7-31 and described in Table 7-22.

Return to Summary Table.

This register specifies whether an interrupt is pending.

Figure 7-31. I2CSRIS Register

31	30	29	28	27	26	25	24
RESERVED							
R-0h							
23	22	21	20	19	18	17	16
RESERVED							
R-0h							
15	14	13	12	11	10	9	8
RESERVED							RXFFRIS
R-0h							R-0h
7	6	5	4	3	2	1	0
TXFERIS	RXRIS	TXRIS	DMATXRIS	DMARXRIS	STOPRIS	STARTRIS	DATARIS
R-0h	R-0h	R-0h	R-0h	R-0h	R-0h	R-0h	R-0h

LEGEND: R/W = Read/Write; R = Read only; W1toCl = Write 1 to clear bit; *-n* = value after reset

Table 7-22. I2CSRIS Register Field Descriptions

Bit	Field	Type	Reset	Description
31-9	RESERVED	R	0h	
8	RXFFRIS	R	0h	Receive FIFO Full Raw Interrupt Status This bit is cleared by writing a 1 to the RXFFIC bit in the I2CSICR register. 0h = No interrupt 1h = The Receive FIFO Full interrupt is pending.
7	TXFERIS	R	0h	Transmit FIFO Empty Raw Interrupt Status This bit is cleared by writing a 1 to the TXFEIC bit in the I2CSICR register. 0h = No interrupt 1h = The Transmit FIFO Empty interrupt is pending. Note that if the TXFERIS interrupt is cleared (by setting the TXFEIC bit) when the TX FIFO is empty, the TXFERIS interrupt does not reassert even though the TX FIFO remains empty in this situation.
6	RXRIS	R	0h	Receive FIFO Request Raw Interrupt Status This bit is cleared by writing a 1 to the RXIC bit in the I2CSICR register. 0h = No interrupt 1h = The trigger value for the FIFO has been reached and a RX FIFO Request interrupt is pending.
5	TXRIS	R	0h	Receive FIFO Request Raw Interrupt Status This bit is cleared by writing a 1 to the RXIC bit in the I2CSICR register. 0h = No interrupt 1h = The trigger value for the FIFO has been reached and a RX FIFO Request interrupt is pending.
4	DMATXRIS	R	0h	Transmit DMA Raw Interrupt Status This bit is cleared by writing a 1 to the DMATXIC bit in the I2CSICR register. 0h = No interrupt 1h = A transmit DMA complete interrupt is pending.

Copyright © 2017, Texas Instruments Incorporated

Table 7-22. I2CSRIS Register Field Descriptions (continued)

Bit	Field	Type	Reset	Description
3	DMARXRIS	R	0h	Receive DMA Raw Interrupt Status This bit is cleared by writing a 1 to the DMARXIC bit in the I2CSICR register. 0h = No interrupt 1h = A receive DMA complete interrupt is pending.
2	STOPRIS	R	0h	Stop Condition Raw Interrupt Status This bit is cleared by writing a 1 to the STOPIC bit in the I2CSICR register. 0h = No interrupt 1h = A STOP condition interrupt is pending.
1	STARTRIS	R	0h	Start Condition Raw Interrupt Status This bit is cleared by writing a 1 to the STARTIC bit in the I2CSICR register. 0h = No interrupt. 1h = A START condition interrupt is pending.
0	DATARIS	R	0h	Data Raw Interrupt Status This interrupt encompasses the following: • slave transaction received • slave transaction requested • next byte transfer request This bit is cleared by writing a 1 to the DATAIC bit in the I2CSICR register. 0h = No interrupt. 1h = Slave Interrupt is pending.

Copyright © 2017, Texas Instruments Incorporated

7.3.19 I2CSMIS Register (Offset = 814h) [reset = 0h]

I2CSMIS is shown in Figure 7-32 and described in Table 7-23.

Return to Summary Table.

This register specifies whether an interrupt was signaled.

Figure 7-32. I2CSMIS Register

31	30	29	28	27	26	25	24
RESERVED							
R-0h							
23	22	21	20	19	18	17	16
RESERVED							
R-0h							
15	14	13	12	11	10	9	8
RESERVED							RXFFMIS
R-0h							R-0h
7	6	5	4	3	2	1	0
TXFEMIS	RXMIS	TXMIS	DMATXMIS	DMARXMIS	STOPMIS	STARTMIS	DATAMIS
R-0h	R-0h	R-0h	R-0h	R-0h	R-0h	R-0h	R-0h

LEGEND: R/W = Read/Write; R = Read only; W1toCl = Write 1 to clear bit; *-n* = value after reset

Table 7-23. I2CSMIS Register Field Descriptions

Bit	Field	Type	Reset	Description
31-9	RESERVED	R	0h	
8	RXFFMIS	R	0h	Receive FIFO Full Interrupt Mask This bit is cleared by writing a 1 to the RXFFIC bit in the I2CSICR register. 0h = No interrupt. 1h = An unmasked Receive FIFO Full interrupt was signaled and is pending.
7	TXFEMIS	R	0h	Transmit FIFO Empty Interrupt Mask This bit is cleared by writing a 1 to the TXFEIC bit in the I2CSICR register. 0h = No interrupt. 1h = An unmasked Transmit FIFO Empty interrupt was signaled and is pending.
6	RXMIS	R	0h	Receive FIFO Request Interrupt Mask This bit is cleared by writing a 1 to the RXIC bit in the I2CSICR register. 0h = No interrupt. 1h = An unmasked Receive FIFO Request interrupt was signaled and is pending.
5	TXMIS	R	0h	Transmit FIFO Request Interrupt Mask This bit is cleared by writing a 1 to the TXIC bit in the I2CSICR register. 0h = No interrupt. 1h = An unmasked Transmit FIFO Request interrupt was signaled and is pending.
4	DMATXMIS	R	0h	Transmit DMA Masked Interrupt Status This bit is cleared by writing a 1 to the DMATXIC bit in the I2CSICR register. 0h = An interrupt has not occurred or is masked. 1h = An unmasked transmit DMA complete interrupt was signaled is pending.

Copyright © 2017, Texas Instruments Incorporated

Table 7-23. I2CSMIS Register Field Descriptions (continued)

Bit	Field	Type	Reset	Description
3	DMARXMIS	R	0h	Receive DMA Masked Interrupt Status This bit is cleared by writing a 1 to the DMARXIC bit in the I2CSICR register. 0h = An interrupt has not occurred or is masked. 1h = An unmasked receive DMA complete interrupt was signaled is pending.
2	STOPMIS	R	0h	Stop Condition Masked Interrupt Status This bit is cleared by writing a 1 to the STOPIC bit in the I2CSICR register. 0h = An interrupt has not occurred or is masked. 1h = An unmasked STOP condition interrupt was signaled is pending.
1	STARTMIS	R	0h	Start Condition Masked Interrupt Status This bit is cleared by writing a 1 to the STARTIC bit in the I2CSICR register. 0h = An interrupt has not occurred or is masked. 1h = An unmasked START condition interrupt was signaled is pending.
0	DATAMIS	R	0h	Data Masked Interrupt Status This bit is cleared by writing a 1 to the DATAIC bit in the I2CSICR register. 0h = An interrupt has not occurred or is masked. 1h = An unmasked slave data interrupt was signaled is pending.

Copyright © 2017, Texas Instruments Incorporated

7.3.20 I2CSICR Register (Offset = 818h) [reset = 0h]

I2CSICR is shown in Figure 7-33 and described in Table 7-24.

Return to Summary Table.

This register clears the raw interrupt. A read of this register returns no meaningful data.

Figure 7-33. I2CSICR Register

31	30	29	28	27	26	25	24
RESERVED							
R-0h							
23	22	21	20	19	18	17	16
RESERVED							
R-0h							
15	14	13	12	11	10	9	8
RESERVED							RXFFIC
R-0h							W-0h
7	6	5	4	3	2	1	0
TXFEIC	RXIC	TXIC	DMATXIC	DMARXIC	STOPIC	STARTIC	DATAIC
W-0h	W-0h	W-0h	W-0h	W-0h	W-0h	W-0h	W-0h

LEGEND: R/W = Read/Write; R = Read only; W1toCl = Write 1 to clear bit; *-n* = value after reset

Table 7-24. I2CSICR Register Field Descriptions

Bit	Field	Type	Reset	Description
31-9	RESERVED	R	0h	
8	RXFFIC	W	0h	Receive FIFO Full Interrupt Mask Writing a 1 to this bit clears the RXFFIS bit in the I2CSRIS register and the RXFFMIS bit in the I2CSMIS register. A read of this register returns no meaningful data.
7	TXFEIC	W	0h	Transmit FIFO Empty Interrupt Mask Writing a 1 to this bit clears the TXFERIS bit in the I2CSRIS register and the TXFEMIS bit in the I2CSMIS register. A read of this register returns no meaningful data.
6	RXIC	W	0h	Receive Request Interrupt Mask Writing a 1 to this bit clears the RXRIS bit in the I2CSRIS register and the RXMIS bit in the I2CSMIS register. A read of this register returns no meaningful data.
5	TXIC	W	0h	Transmit Request Interrupt Mask Writing a 1 to this bit clears the TXRIS bit in the I2CSRIS register and the TXMIS bit in the I2CSMIS register. A read of this register returns no meaningful data.
4	DMATXIC	W	0h	Transmit DMA Interrupt Clear Writing a 1 to this bit clears the DMATXRIS bit in the I2CSRIS register and the DMATXMIS bit in the I2CSMIS register. A read of this register returns no meaningful data.
3	DMARXIC	W	0h	Receive DMA Interrupt Clear Writing a 1 to this bit clears the DMARXRIS bit in the I2CSRIS register and the DMARXMIS bit in the I2CSMIS register. A read of this register returns no meaningful data.
2	STOPIC	W	0h	Receive DMA Interrupt Clear Writing a 1 to this bit clears the DMARXRIS bit in the I2CSRIS register and the DMARXMIS bit in the I2CSMIS register. A read of this register returns no meaningful data.

Copyright © 2017, Texas Instruments Incorporated

Table 7-24. I2CSICR Register Field Descriptions (continued)

Bit	Field	Type	Reset	Description
1	STARTIC	W	0h	Start Condition Interrupt Clear Writing a 1 to this bit clears the STARTRIS bit in the I2CSRIS register and the STARTMIS bit in the I2CSMIS register. A read of this register returns no meaningful data.
0	DATAIC	W	0h	Start Condition Interrupt Clear Writing a 1 to this bit clears the STARTRIS bit in the I2CSRIS register and the STARTMIS bit in the I2CSMIS register. A read of this register returns no meaningful data.

Copyright © 2017, Texas Instruments Incorporated

7.3.21 I2CSOAR2 Register (Offset = 81Ch) [reset = 0h]

I2CSOAR2 is shown in Figure 7-34 and described in Table 7-25.

Return to Summary Table.

This register consists of seven address bits that identify the alternate address for the I2C device on the I2C bus.

Figure 7-34. I2CSOAR2 Register

31	30	29	28	27	26	25	24
RESERVED							
R-0h							
23	22	21	20	19	18	17	16
RESERVED							
R-0h							
15	14	13	12	11	10	9	8
RESERVED							
R-0h							
7	6	5	4	3	2	1	0
OAR2EN	OAR2						
R/W-0h	R/W-0h						

LEGEND: R/W = Read/Write; R = Read only; W1toCl = Write 1 to clear bit; *-n* = value after reset

Table 7-25. I2CSOAR2 Register Field Descriptions

Bit	Field	Type	Reset	Description
31-8	RESERVED	R	0h	
7	OAR2EN	R/W	0h	I2C Slave Own Address 2 Enable 0h = The alternate address is disabled. 1h = Enables the use of the alternate address in the OAR2 field.
6-0	OAR2	R/W	0h	I2C Slave Own Address 2 This field specifies the alternate OAR2 address.

Copyright © 2017, Texas Instruments Incorporated

7.3.22 I2CSACKCTL Register (Offset = 820h) [reset = 0h]

I2CSACKCTL is shown in Figure 7-35 and described in Table 7-26.

Return to Summary Table.

This register enables the I2C slave to NACK for invalid data or command or ACK for valid data or command. The I2C clock is pulled low after the last data bit until this register is written.

Figure 7-35. I2CSACKCTL Register

31	30	29	28	27	26	25	24
RESERVED							
R-0h							
23	22	21	20	19	18	17	16
RESERVED							
R-0h							
15	14	13	12	11	10	9	8
RESERVED							
R-0h							
7	6	5	4	3	2	1	0
RESERVED						ACKOVAL	ACKOEN
R-0h						R/W-0h	R/W-0h

LEGEND: R/W = Read/Write; R = Read only; W1toCl = Write 1 to clear bit; *-n* = value after reset

Table 7-26. I2CSACKCTL Register Field Descriptions

Bit	Field	Type	Reset	Description
31-2	RESERVED	R	0h	
1	ACKOVAL	R/W	0h	I2C Slave ACK Override Value 0h = An ACK is sent indicating valid data or command. 1h = A NACK is sent indicating invalid data or command.
0	ACKOEN	R/W	0h	I2C Slave ACK Override Enable 0h = A response in not provided. 1h = An ACK or NACK is sent according to the value written to the ACKOVAL bit.

Copyright © 2017, Texas Instruments Incorporated

7.3.23 I2CFIFODATA Register (Offset = F00h) [reset = 0h]

I2CFIFODATA is shown in Figure 7-36 and described in Table 7-27.

Return to Summary Table.

The I2C FIFO Data (I2CFIFODATA) register contains the current value of the top of the RX or TX FIFO stack being used in the a transfer.

Figure 7-36. I2CFIFODATA Register

31	30	29	28	27	26	25	24	23	22	21	20	19	18	17	16	15	14	13	12	11	10	9	8	7	6	5	4	3	2	1	0
RESERVED																								DATA							
R-0h																								R/W-0h							

LEGEND: R/W = Read/Write; R = Read only; W1toCl = Write 1 to clear bit; *-n* = value after reset

Table 7-27. I2CFIFODATA Register Field Descriptions

Bit	Field	Type	Reset	Description
31-8	RESERVED	R	0h	
7-0	DATA	R/W	0h	I2C RX FIFO Data Byte This field contains the current byte being read in the RX FIFO stack. This field contains the current byte written to the TX FIFO. For back to back transmit operations, the application should not switch between writing to the I2CSDR register and the I2CFIFODATA.

Copyright © 2017, Texas Instruments Incorporated

7.3.24 I2CFIFOCTL Register (Offset = F04h) [reset = 00040004h]

I2CFIFOCTL is shown in Figure 7-37 and described in Table 7-28.

Return to Summary Table.

The FIFO Control register can be programmed to control various aspects of the FIFO transaction, such as RX and TX FIFO assignment, byte count value for FIFO triggers, and flushing of the FIFOs.

Figure 7-37. I2CFIFOCTL Register

31	30	29	28	27	26	25	24
RXASGNMT	RXFLUSH	DMARXENA	RESERVED				
R/W-0h	R/W-0h	R/W-0h	R-0h				
23	22	21	20	19	18	17	16
RESERVED					RXTRIG		
R-0h					R/W-4h		
15	14	13	12	11	10	9	8
TXASGNMT	TXFLUSH	DMATXENA	RESERVED				
R/W-0h	R/W-0h	R/W-0h	R-0h				
7	6	5	4	3	2	1	0
RESERVED					TXTRIG		
R-0h					R/W-4h		

LEGEND: R/W = Read/Write; R = Read only; W1toCl = Write 1 to clear bit; *-n* = value after reset

Table 7-28. I2CFIFOCTL Register Field Descriptions

Bit	Field	Type	Reset	Description
31	RXASGNMT	R/W	0h	RX Control Assignment 0h = RX FIFO is assigned to master 1h = RX FIFO is assigned to slave
30	RXFLUSH	R/W	0h	RX FIFO Flush Setting this bit flushes the RX FIFO. This bit self-clears when the flush has completed.
29	DMARXENA	R/W	0h	DMA RX Channel Enable 0h = DMA RX channel disabled 1h = DMA RX channel enabled
28-19	RESERVED	R	0h	
18-16	RXTRIG	R/W	4h	RX FIFO Trigger Indicates at what fill level the RX FIFO generates a trigger. 0h = Trigger when RX FIFO contains no bytes 1h = Trigger when Rx FIFO contains 1 or more bytes 2h = Trigger when Rx FIFO contains 2 or more bytes 3h = Trigger when Rx FIFO contains 3 or more bytes 4h = Trigger when Rx FIFO contains 4 or more bytes 5h = Trigger when Rx FIFO contains 5 or more bytes 6h = Trigger when Rx FIFO contains 6 or more bytes 7h = Trigger when Rx FIFO contains 7 or more bytes. Note: Programming RXTRIG to 0x0 has no effect since no data is present to transfer out of RX FIFO.
15	TXASGNMT	R/W	0h	TX Control Assignment 0h = TX FIFO is assigned to Master 1h = TX FIFO is assigned to Slave
14	TXFLUSH	R/W	0h	TX FIFO Flush Setting this bit flushes the TX FIFO. This bit self-clears when the flush has completed.

Copyright © 2017, Texas Instruments Incorporated

Table 7-28. I2CFIFOCTL Register Field Descriptions (continued)

Bit	Field	Type	Reset	Description
13	DMATXENA	R/W	0h	DMA TX Channel Enable 0h = DMA TX channel disabled 1h = DMA TX channel enabled
12-3	RESERVED	R	0h	
2-0	TXTRIG	R/W	4h	TX FIFO Trigger Indicates at what fill level in the TX FIFO a trigger is generated. 0h = Trigger when the TX FIFO is empty. 1h = Trigger when TX FIFO contains 1 byte 2h = Trigger when TX FIFO contains 2 bytes 3h = Trigger when TX FIFO 3 bytes 4h = Trigger when TX FIFO 4 bytes 5h = Trigger when TX FIFO 5 bytes 6h = Trigger when TX FIFO 6 bytes 7h = Trigger when TX FIFO 7 bytes

Copyright © 2017, Texas Instruments Incorporated

7.3.25 I2CFIFOSTATUS Register (Offset = F08h) [reset = 00010005h]

I2CFIFOSTATUS is shown in Figure 7-38 and described in Table 7-29.

Return to Summary Table.

This register contains the real-time status of the RX and TX FIFOs.

Figure 7-38. I2CFIFOSTATUS Register

31	30	29	28	27	26	25	24
RESERVED							
R-0h							
23	22	21	20	19	18	17	16
RESERVED					RXABVTRIG	RXFF	RXFE
R-0h					R-0h	R-0h	R-1h
15	14	13	12	11	10	9	8
RESERVED							
R-0h							
7	6	5	4	3	2	1	0
RESERVED					TXBLWTRIG	TXFF	TXFE
R-0h					R-1h	R-0h	R-1h

LEGEND: R/W = Read/Write; R = Read only; W1toCl = Write 1 to clear bit; *-n* = value after reset

Table 7-29. I2CFIFOSTATUS Register Field Descriptions

Bit	Field	Type	Reset	Description
31-19	RESERVED	R	0h	
18	RXABVTRIG	R	0h	RX FIFO Above Trigger Level 0h = The number of bytes in RX FIFO is below the trigger level programmed by the RXTRIG bit in the I2CFIFOCTL register 1h = The number of bytes in the RX FIFO is above the trigger level programmed by the RXTRIG bit in the I2CFIFOCTL register
17	RXFF	R	0h	RX FIFO Full 0h = The RX FIFO is not full. 1h = The RX FIFO is full.
16	RXFE	R	1h	RX FIFO Empty 0h = The RX FIFO is not empty. 1h = The RX FIFO is empty.
15-3	RESERVED	R	0h	
2	TXBLWTRIG	R	1h	TX FIFO Below Trigger Level 0h = The number of bytes in TX FIFO is above the trigger level programmed by the TXTRIG bit in the I2CFIFOCTL register 1h = The number of bytes in the TX FIFO is below the trigger level programmed by the TXTRIG bit in the I2CFIFOCTL register
1	TXFF	R	0h	TX FIFO Full 0h = The TX FIFO is not full. 1h = The TX FIFO is full.
0	TXFE	R	1h	TX FIFO Empty 0h = The TX FIFO is not empty. 1h = The TX FIFO is empty.

Copyright © 2017, Texas Instruments Incorporated

7.3.26 I2CPP Register (Offset = FC0h) [reset = 1h]

I2CPP is shown in Figure 7-39 and described in Table 7-30.

Return to Summary Table.

The I2CPP register provides information regarding the properties of the I2C module.

Figure 7-39. I2CPP Register

31	30	29	28	27	26	25	24	23	22	21	20	19	18	17	16
RESERVED															
R-0h															
15	14	13	12	11	10	9	8	7	6	5	4	3	2	1	0
RESERVED															HS
R-0h															R-1h

LEGEND: R/W = Read/Write; R = Read only; W1toCl = Write 1 to clear bit; *-n* = value after reset

Table 7-30. I2CPP Register Field Descriptions

Bit	Field	Type	Reset	Description
31-1	RESERVED	R	0h	
0	HS	R	1h	High-Speed Capable 0h = The interface is capable of standard or fast mode operation. 1h = Reserved

Copyright © 2017, Texas Instruments Incorporated

7.3.27 I2CPC Register (Offset = FC4h) [reset = 1h]

I2CPC is shown in Figure 7-40 and described in Table 7-31.

Return to Summary Table.

The I2CPC register allows software to enable features present in the I2C module.

Figure 7-40. I2CPC Register

31	30	29	28	27	26	25	24	23	22	21	20	19	18	17	16
RESERVED															
R-0h															
15	14	13	12	11	10	9	8	7	6	5	4	3	2	1	0
RESERVED															HS
R-0h															R-1h

LEGEND: R/W = Read/Write; R = Read only; W1toCl = Write 1 to clear bit; *-n* = value after reset

Table 7-31. I2CPC Register Field Descriptions

Bit	Field	Type	Reset	Description
31-1	RESERVED	R	0h	
0	HS	R	1h	High-Speed Capable 0h = The interface is capable of standard or fast mode operation. 1h = Reserved. Must be set to 0

Copyright © 2017, Texas Instruments Incorporated

SPI (Serial Peripheral Interface)

Topic **Page**

8.1 Overview 240
8.2 Functional Description 241
8.3 Initialization and Configuration 256
8.4 Access to Data Registers 257
8.5 Module Initialization 258
8.6 SPI Registers 265

Copyright © 2017, Texas Instruments Incorporated

8.1 Overview

This chapter is intended to provide programmers with a functional presentation of the master and slave serial peripheral interface module, and provides a module configuration example. The serial peripheral interface (SPI) is a four-wire bidirectional communications interface that converts data between parallel and serial.

The CC32xx device has two SPI interfaces:

- One SPI (master) interface is reserved for interfacing an external serial flash to the CC32xx. The serial flash holds the application image and networking credentials, policies, and software patches. This is referred to as the FLASH_SSPI; it has a fixed mapping to package pins.
- The second SPI interface can be used by the application in either master or slave mode. Refer to Section 8.6 on pin-mux for the supported pin mapping options for this interface and the state of the pins in various sleep and reset states. CLKSPIREF is the clock input to the SPI module, and has a gating in PRCM module (refer to on clock-reset-power management). The subdivision of this clock is inside the SPI module. The CC32xx does not support waking up of the chip on SPI interface activity.

This chapter focuses on the second SPI interface.

The SPI module performs serial-to-parallel conversion on data received from a peripheral device, and parallel-to-serial conversion on data transmitted to a peripheral device. The SPI module can be configured as either a master or slave device. As a slave device, the SPI module can also be configured to disable its output, which allows a master device to be coupled with multiple slave devices. The TX and RX paths are buffered with separate internal FIFOs. The SPI module also includes a programmable bit rate clock divider to generate the output serial clock derived from the input clock of the SPI module. Bit rates are generated based on the input clock, and the maximum bit rate is determined by the connected peripheral.

The SPI allows full duplex between a local host and SPI-compliant external devices (slaves and masters). Figure 8-1 shows a high-level overview of the SPI system.

Figure 8-1. SPI Block Diagram

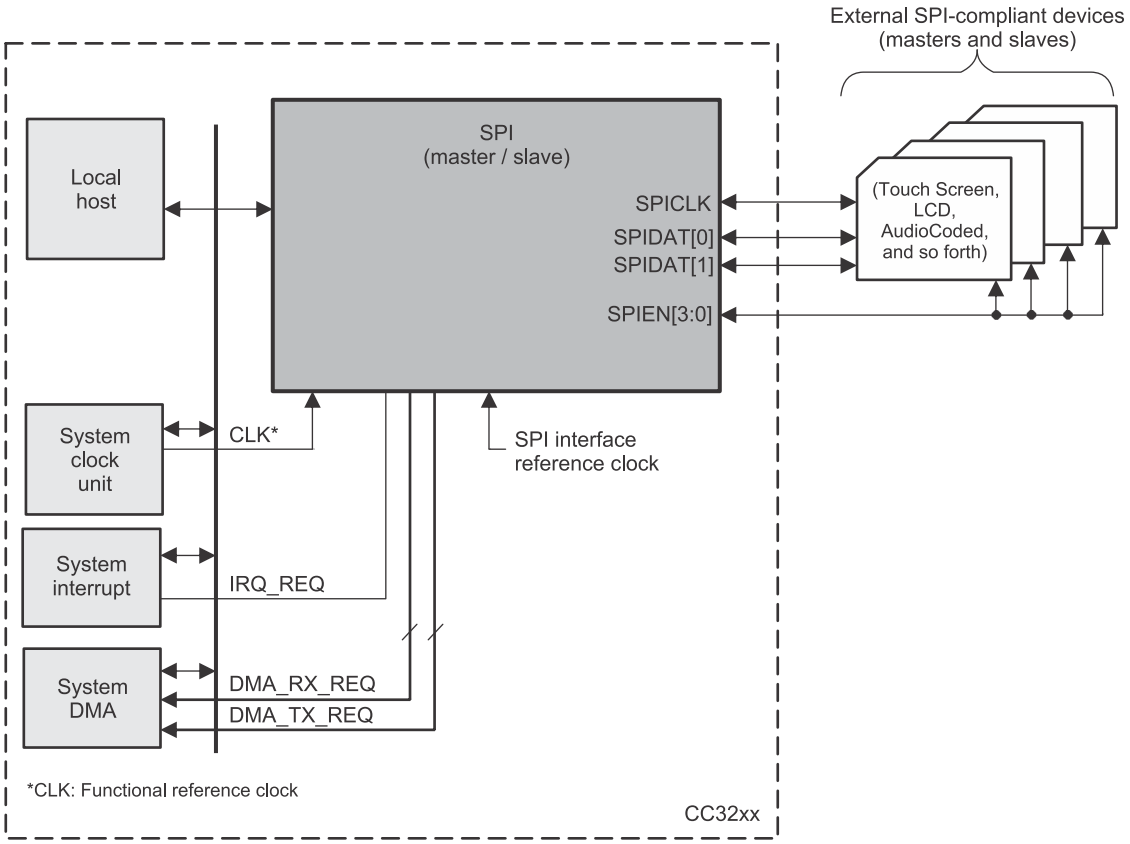

Copyright © 2017, Texas Instruments Incorporated

8.1.1 Features

- Serial clock with programmable frequency, polarity, and phase
- SPI enable
  - Generation programmable
  - Programmable polarity
- Selection of SPI word lengths at 8, 16, and 32 bits
- Support of both master and slave modes
- Independent DMA requests for read and write
- No dead cycle between two successive words in slave mode
- Multiple SPI word access with a channel using an enabled FIFO

The SPI allows a duplex serial communication between a local host and SPI-compliant external devices (slaves and masters).

8.2 Functional Description

8.2.1 SPI interface

Table 8-1 lists the name and description of the SPI interface used for connection to external SPI compliant devices.

Table 8-1. SPI Interface

Name	Type	Reset Value	Description
MISO/MOSI [1:0]	In-Out	Z	Serial data lines for transmitting and receiving data.
SPICLK	In-Out	Z	Transmits the serial clock when configured as a master. Receives the serial clock when configured as a slave.
SPIEN	In-Out	Z	Indicates the beginning and the end of serialized data word. Selects the external slave SPI devices when configured as master. Receives the slave select signal from external SPI masters when configured as a slave

8.2.2 SPI Transmission

This section describes the transmissions supported by SPI.

The SPI protocol is a synchronous protocol that allows a master device to initiate serial communication with a slave device. Data is exchanged between these devices. A slave select line (SPIEN) can be use to allow selection of slave SPI device. The flexibility of SPI allows exchanging data with several formats through programmable parameters.

8.2.2.1 Two Data Pins Interface Mode

The two data pins interface mode allows a full duplex SPI transmission where data is transmitted (shifted out serially) and received (shifted in serially) simultaneously on separate data lines, MISO and MOSI.

- Data leaving the master exits on transmit serial data line also known as MOSI: MasterOutSlaveIn.
- Data leaving the slave exits on the receive data line also known as MISO: MasterInSlaveOut.

The serial clock (SPICLK) synchronizes shifting and sampling of the information on the two serial data lines. Each time a bit is transferred out from the master; one bit is transferred in from the slave.

Copyright © 2017, Texas Instruments Incorporated

Figure 8-2 shows an example of a full duplex system with a master device on the left and a slave device on the right. After 8 cycles of the serial clock SPICLK, the WordA has been transferred from the master to the slave. At the same time, the WordB has been transferred from the slave to the master.

Figure 8-2. SPI Full Duplex Transmission (Example)

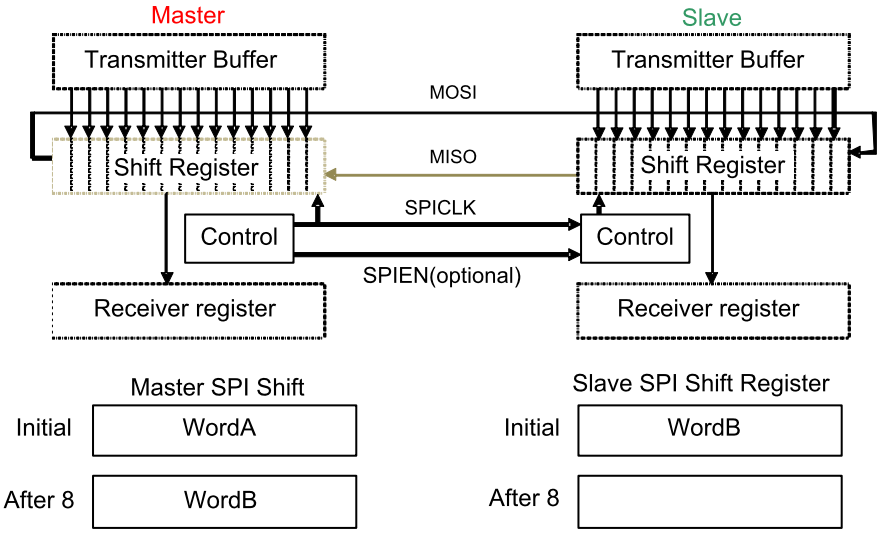

When referring to the master device, the control block transmits the clock SPICLK and the enable signal SPIEN.

8.2.2.2 Transfer formats

This section describes the transfer formats supported by SPI. The flexibility of SPI allows setting the parameters of the SPI transfer:

- SPI word length
- SPI enable generation programmable
- SPI enable assertion
- SPI enable polarity
- SPI clock frequency
- SPI clock phase
- SPI clock polarity

The software is responsible for the consistency between SPI word length, clock phase, and clock polarity of the master SPI device and the communicating slave device.

8.2.2.2.1 Programmable Word Length

SPI supports word of 8, 16, and 32 bits long.

8.2.2.2.2 Programmable SPI Enable (SPIEN)

The polarity of the SPIEN signals is programmable. SPIEN signals can be active high or low. The assertion of the SPIEN signals is programmable: SPIEN signals can be manually asserted or automatically asserted.

8.2.2.2.3 Programmable SPI Clock (SPICLK)

The phase and the polarity of the SPI serial clock are programmable when SPI is a master device or a slave device. The baud rate of the SPI serial clock is programmable when SPI is a master. When SPI is operating as a slave, the serial clock SPICLK is an input from the external master.

Copyright © 2017, Texas Instruments Incorporated

8.2.2.2.4 Bit Rate

In master mode, an internal reference clock CLKSPIREF is used as an input of a programmable divider to generate the bit rate of the serial clock SPICLK.

8.2.2.2.5 Polarity and Phase

SPI supports 4 sub-modes of the SPI format transfer that depend on the polarity (POL) and the phase (PHA) of the SPI serial clock (SPICLK). The details of each sub-mode are described in the following chapters. Table 8-2 shows a summary of the 4 sub-modes. Software selects one of four combinations of serial clock phase and polarity.

Table 8-2. Phase and Polarity Combinations

Polarity (POL)	Phase (PHA)	SPI Mode	Comments	
0	0	mode0	SPICLK active high and sampling occurs on the rising edge	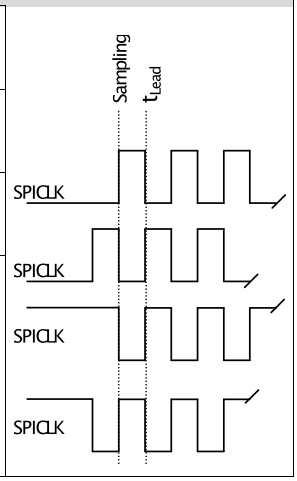
0	1	mode1	SPICLK active high and sampling occurs on the falling edge	
1	0	mode2	SPICLK active low and campling occurs on the falling edge	
1	1	mode3	SPICLK active low and sampling occurs on the rising edge	

8.2.2.2.5.1 Transfer Format with PHA = 0

This section describes the concept of an SPI transmission with the SPI mode0 and SPI mode2. In the transfer format with PHA = 0, SPIEN is activated a half-cycle of SPICLK ahead of the first SPICLK edge.

In both master and slave modes, SPI drives the data lines at the time of SPIEN is asserted. Each data frame is transmitted starting with the MSB. At the extremity of both SPI data lines, the first bit of the SPI word is valid a half-cycle of SPICLK after the SPIEN assertion.

Thus, the first edge of the SPICLK line is used by the master to sample the first data bit sent by the slave. On the same edge, the first data bit sent by the master is sampled by the slave. On the next SPICLK edge, the received data bit is shifted into the shift register, and a new data bit is transmitted on the serial data line.

This process continues for a total number of pulses on the SPICLK line defined by the SPI word length programmed in the master device, with data being latched on odd-numbered edges and shifted on even-numbered edges.

Figure 8-3 is a timing diagram of a SPI transfer for the SPI mode0 and SPI mode2, when SPI is master or slave, with the frequency of SPICLK equals the frequency of CLKSPIREF.

Copyright © 2017, Texas Instruments Incorporated

Figure 8-3. Full Duplex Single Transfer Format with PHA = 0

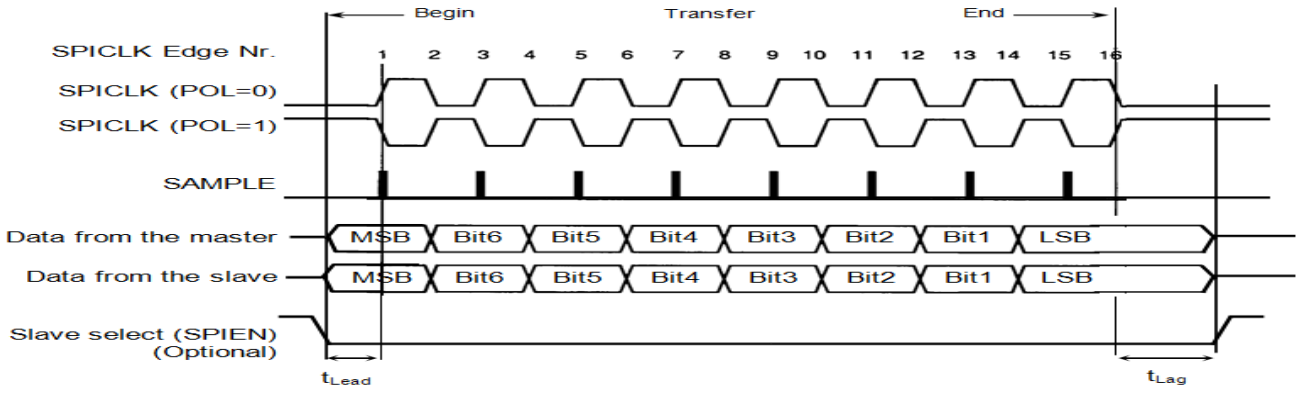

t Lead— Minimum leading time required for slave mode (guaranteed in master mode) before the first SPICLK edge.

t Lag— Minimum trailing time required for slave mode (guaranteed in master mode) after the last SPICLK edge.

In 3-pin mode without using the SPIEN signal, the controller provides the same waveform, with SPIEN forced to low state. In 3-pin slave mode, SPIEN is useless.

8.2.2.2.5.2 Transfer Format with PHA = 1

This section describes SPI full duplex transmission with the SPI mode1 and SPI mode3. In the transfer format with PHA = 1, SPIEN is activated a delay (t_{Lead}) ahead of the first SPICLK edge. In both master and slave modes, SPI drives the data lines on the first SPICLK edge.

Each data frame is transmitted starting with the MSB. At the extremity of both SPI data lines, the first bit of the SPI word is valid on the next SPICLK edge, a half-cycle of SPICLK later, and is the sampling edge for both the master and slave. When the third edge occurs, the received data bit is shifted into the shift register. The next data bit of the master is provided to the serial input pin of the slave. This process continues for a total number of pulses on the SPICLK line defined by the word length programmed in the master device, with data being latched on even-numbered edges and shifted on odd-numbered edges.

Figure 8-4 is a timing diagram of an SPI transfer for the SPI mode1 and SPI mode3, when SPI is master or slave, with the frequency of SPICLK equals the frequency of CLKSPIREF.

Copyright © 2017, Texas Instruments Incorporated

Figure 8-4. Full Duplex Single Transfer Format with PHA = 1

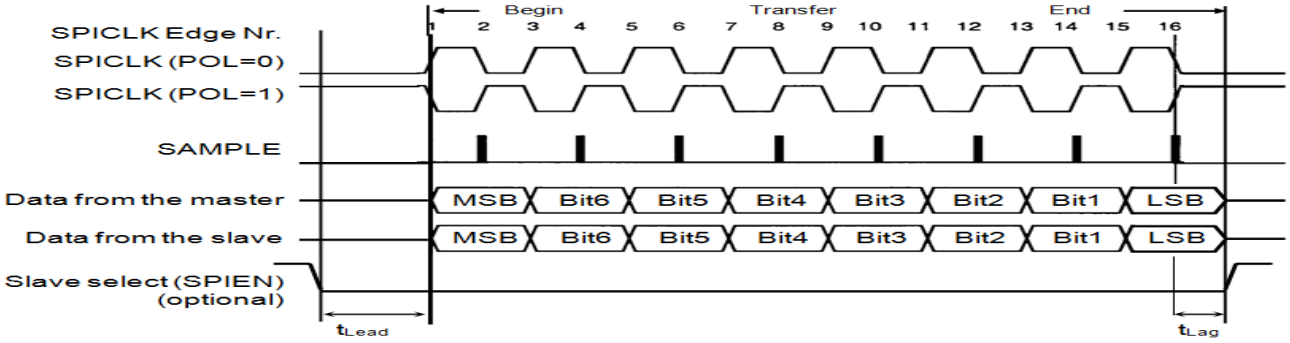

t $_{Lead}$ — Minimum leading time required for slave mode (guaranteed in master mode) before the first SPICLK edge.

t $_{Lag}$ — Minimum trailing time required for slave mode (guaranteed in master mode) after the last SPICLK edge.

In 3-pin mode without using the SPIEN signal, the controller provides the same waveform, with SPIEN forced to low state. In 3-pin slave mode, SPIEN is useless.

8.2.3 Master Mode

SPI is in master mode when the MS bit of the SPI_MODULCTRL register is cleared.

8.2.3.1 Interrupt Events in Master Mode

In master mode, the interrupt events related to the transmitter register state are TX_empty and TX_underflow. The interrupt event related to the receiver register state is RX_full.

8.2.3.1.1 TX_empty

The event TX_empty is activated when a channel is enabled and its transmitter register becomes empty (transient event). Enabling the channel automatically raises this event. When the FIFO buffer is enabled (MCSPI_CHCONF[FFEW] set to 1), the TX_empty is asserted once there is enough space in buffer to write the number of bytes defined by MCSPI_XFERLEVEL[AEL].

The transmitter register must be loaded to remove the source of the interrupt, and the TX_empty interrupt status bit must be cleared for interrupt line de-assertion (if the event is enabled as an interrupt source).

When FIFO is enabled, no new TX_empty event is asserted when the local host has not performed the number of writes into the transmitter register, defined by MCSPI_XFERLEVEL[AEL]. The local host must perform the correct number of writes.

Copyright © 2017, Texas Instruments Incorporated

8.2.3.1.2 TX_underflow

The event TX_underflow is activated when the channel is enabled and the transmitter register or FIFO is empty (not updated with new data) at the time of a shift register assignment. TX_underflow acts as a warning in master mode.

To avoid having TX_underflow event at the beginning of a transmission, TX_underflow is not activated when no data has been loaded into the transmitter register, because the channel has been enabled. To avoid TX_underflow, the transmitter register must rarely be loaded. The TX_underflow interrupt status bit must be cleared for interrupt line de-assertion (if the event is enabled as an interrupt source).

8.2.3.1.3 RX_ full

The event RX_full is activated when the channel is enabled and the receiver register is filled. When the FIFO buffer is enabled (MCSPI_CHCONF[FFER] set to 1), the RX_full is asserted once there are a certain number of bytes held in the buffer to read, as defined by MCSPI_XFERLEVEL[AFL].

The receiver register must be read to remove the source of interrupt, and the RX_full interrupt status bit must be cleared for interrupt line de-assertion (if the event is enabled as an interrupt source). When FIFO is enabled, no new RX_full event is asserted until the local host has not performed the number of reads into the receive register, as defined by MCSPI_XFERLEVEL[AFL]. It is the responsibility of the local host to perform the correct number of reads.

8.2.3.1.4 End of Word Count

The event EOW (end-of-word count) is activated when the channel is enabled and configured to use the built-in FIFO. This interrupt is raised when the controller has performed the number of transfers defined in the MCSPI_XFERLEVEL[WCNT] register. If the value was programmed to 0x0000, the counter is not enabled, and this interrupt is not generated.

The end of word count interrupt also indicates that the SPI transfer is halted on the channel (using the FIFO buffer) until MCSPI_XFERLEVEL[WCNT] is not reloaded and the channel is re-enabled. The end of word interrupt status bit must be cleared for interrupt line de-assertion (if the event is enabled as an interrupt source).

8.2.3.2 Master Transmit and Receive Mode

This mode is programmable by the TRM bit of the SPI_CHCONF register. The channel access to the shift registers is based on its transmitter and receiver register state.

1. The channel can be scheduled for transmission or reception only when enabled (EN bit of the SPI_CHCTRL register).
2. An enabled channel can be scheduled if its transmitter register is not empty (TXS bit of the SPI_CHSTAT register) or its FIFO is not empty, or if the buffer is used (FFE bit of the MCSPI_CHSTAT register) and updated with new data at the time of shift register assignment. If the transmitter register or FIFO is empty at the time of shift register assignment, the event TX_underflow is activated.
3. An enabled channel can be scheduled if its receive register is not full (RXS bit of the SPI_CHSTAT register), or its FIFO is not full if the buffer is used (FFF bit of the MCSPI_CHSTAT register) at the time of shift register assignment. Thus, the receiver register of FIFO cannot be overwritten. The RX_overflow bit in the SPI_IRQSTATUS register is never set in this mode.

The built-in FIFO is available in this mode, and can be configured in one or both data directions for transmit or receive. The FIFO is seen as a 64-byte buffer if configured for one data direction. If configured in both data directions (transmit and receive), the FIFO is split into two separate 32-byte buffers with their own address space management. In this case, the definition of AEL and AFL levels is based on 32 bytes, and is under local host responsibility.

8.2.3.3 SPI Enable Control in Master Mode

When SPI is configured as a master device, the assertion of the SPIEN is optional, depending on the device connected to the controller. The following is a description of each configuration:

Copyright © 2017, Texas Instruments Incorporated

- In 3-pin mode: the MCSPI_MODULCTRL[1] PIN34 and MCSPI_MODULCTRL[0] SINGLE bits are set to 1, and the controller transmits the SPI word once the transmit register or FIFO is not empty.
- In 4-pin mode: the MCSPI_MODULCTRL[1] PIN34 bit is set to 0 and MCSPI_MODULCTRL[0] SINGLE bit is set to 1, and the SPIEN assertion and deassertion is controlled by software.

8.2.3.3.1 Keep SPIEN Active Mode (Force SPIEN)

Continuous transfers are manually allowed, by keeping the SPIEN signal active for successive SPI words. Several sequences (configuration – enable – disable of the channel) can be run without deactivating the SPIEN line.

The 'keep SPIEN active' mode is authorized when:

- The parameters of the transfer are loaded in the configuration register (MCSPI_CHCONF)
- The state of the SPIEN signal is programmable:
  - Writing 1 into the FORCE bit of the MCSPI_CHCONF register drives the SPIEN line high when MCSPI_CHCONF[EPOL] is set to zero, and drives it low when MCSPI_CHCONF[EPOL] is set.
  - Writing 0 into the FORCE bit of the MCSPI_CHCONF register drives the SPIEN line low when MCSPI_CHCONF[EPOL] is set to zero, and drives it high when MCSPI_CHCONF[EPOL] is set.

Once the channel is enabled, the SPIEN signal is activated with the programmed polarity. The start of the transfer depends on the status of the transmitter register and the status of the receiver register.

The status of the serialization completion of each SPI word is given by the EOT bit of the SPI_CHSTAT register, set when received data is loaded from the shift register to the receiver register.

A change in the configuration parameters is directly propagated on the SPI interface. If the SPIEN signal is activated, the user must ensure that the configuration is changed only between SPI words, to avoid corrupting the current transfer. SPIEN polarity, the SPICLK phase, and SPICLK polarity must not be modified when the SPIEN signal is activated. The channel can be disabled and enabled while the SPIEN signal is activated.

At the end of the last SPI word, the channel must be deactivated (MCSPI_CHCTRL[En] set to 0) and the SPIEN can be forced to its inactive state (MCSPI_CHCONF[Force]).

Figure 8-5. Contiguous Transfers with SPIEN Kept Active (2 Data Pins Interface Mode)

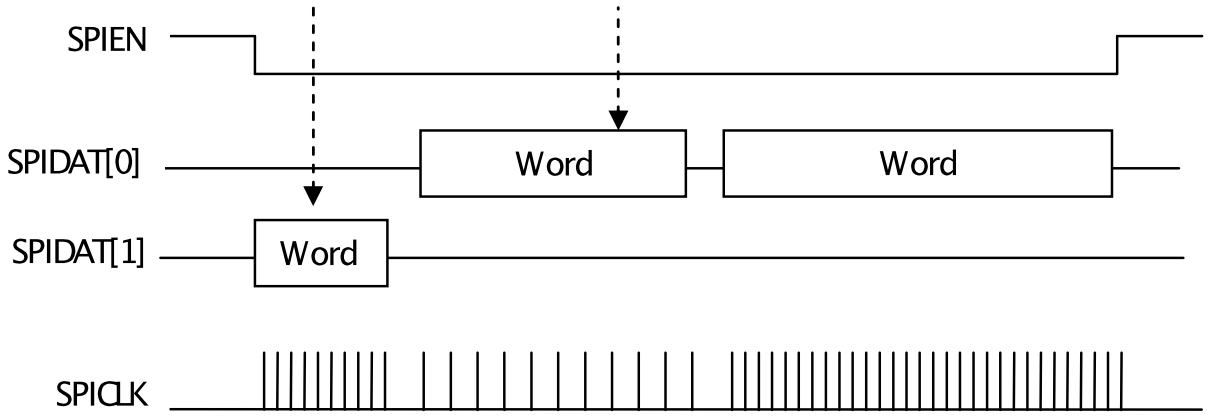

Figure 8-5 shows successive transfers with SPIEN kept active low, with a different configuration for each SPI word in single data pin interface mode and two data pins interface mode. The arrows indicate when the channel is disabled before a change in the configuration parameters, and enabled again.

8.2.3.4 Clock Ratio Granularity

The clock division ratio is defined by the MCSPI_CHCONF[CLKD] register, with power of two granularity leading to a clock division in range 1 to 32768; in this case the duty cycle is always 50%.

Copyright © 2017, Texas Instruments Incorporated

Table 8-3. Clock Ratio Granularity

Clock Ratio F_{ratio}	CLKSPIO High Time	CLKSPIO Low Time
1	T_{high}_ref	T_{low}_ref
Even ≥ 2	T_ref × (F_{ratio}/2)	T_ref × (F_{ratio}/2)

Granularity examples with a clock source frequency of 48 Mhz:

Table 8-4. Granularity Examples

MCSPI_CHCONF[CLKD]	F_{ratio}	MCSPI_CHCONF[PHA]	MCSPI_CHCONF[POL]	T_{high} (ns)	T_{low} (ns)	T_{period} (ns)	Duty Cycle	F_{out} (Mhz)
0	1	X	X	10.4	10.4	20.8	50-50	48
1	2	X	X	20.8	20.8	41.6	50-50	24
2	4	X	X	41.6	41.6	83.2	50-50	12
3	8	X	X	83.2	83.2	166.4	50-50	6

8.2.3.4.1 FIFO Buffer Management

The SPI controller has a built-in 64-byte buffer to unload the DMA or interrupt handler and improve data throughput. This buffer can be used by setting MCSPI_CHCONF[FFER] or MCSPI_CHCONF[FFEW] to 1. The buffer can be used in the modes defined below:

- Master or slave mode
- Every word length MCSPI_CHCONF[WL] are supported.

Two levels, AEL and AFL, located in the MCSPI_XFERLEVEL register, rule the buffer management. The driver must set these values as a multiple of SPI word length defined in MCSPI_CHCONF[WL]. The number of bytes written in the FIFO depends on word length (see Table 8-5). The FIFO buffer pointers are reset when the channel is enabled, or when the FIFO configuration changes.

Table 8-5. SPI Word Length WL

	SPI Word Length	
	8	16 and 32
Number of bytes written in the FIFO	2 Bytes	4 Bytes

8.2.3.4.1.1 Split FIFO

The FIFO can be split into two parts when the module is configured in transmit/receive mode, MCSPI_CHCONF[TRM] set to 0, and MCSPI_CHCONF[FFER] and MCSPI_CHCONF[FFEW] asserted. Then system can access a 32-byte depth FIFO per direction.

Copyright © 2017, Texas Instruments Incorporated

Figure 8-6. Transmit/Receive Mode With no FIFO Used

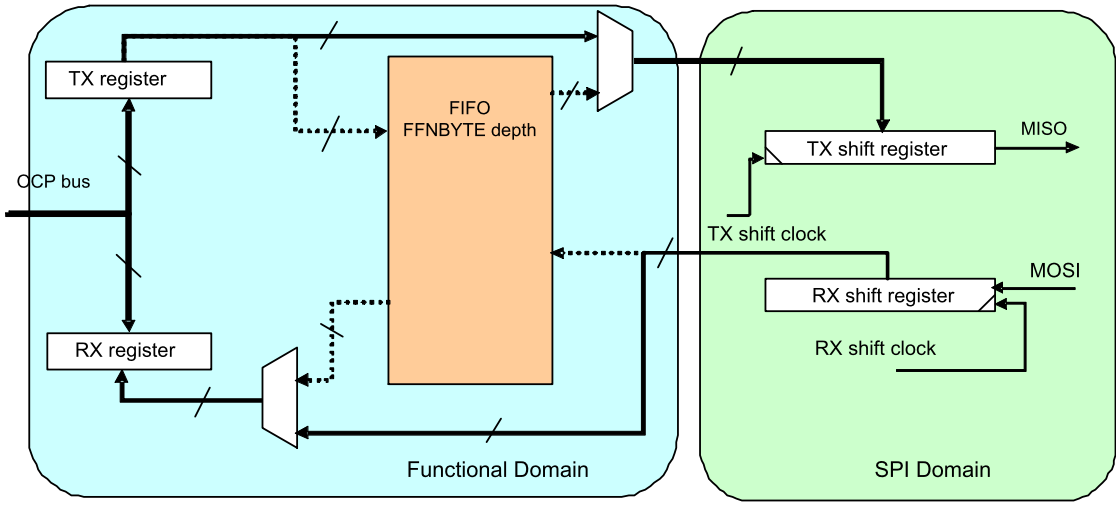

Configuration:
MCSPI_CHCONF[TRM]=0x0 Transmit/receive mode enabled
MCSPI_CHCONF[FFRE]=0x0 FIFO disabled on receive path
MCSPI_CHCONF[FFWE]=0x0 FIFO disabled on transmit path

Figure 8-7. Transmit/Receive Mode With Only Receive FIFO Enabled

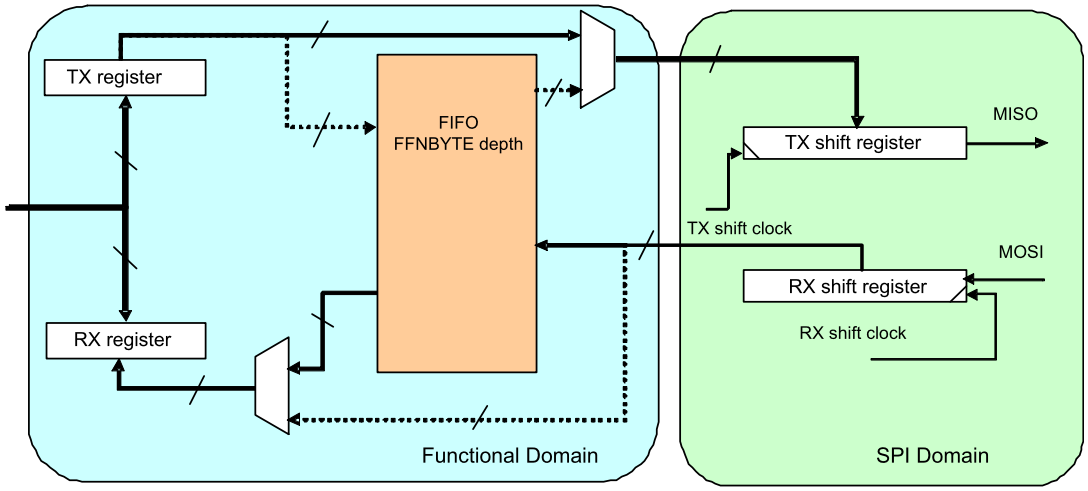

Configuration:
MCSPI_CH(i)CONF[TRM]=0x0 Transmit/receive mode enabled
MCSPI_CH(i)CONF[FFRE]=0x1 FIFO enabled on receive path
MCSPI_CH(i)CONF[FFWE]=0x0 FIFO disabled on transmit path

Copyright © 2017, Texas Instruments Incorporated

Figure 8-8. Transmit/Receive Mode With Only Transmit FIFO Used

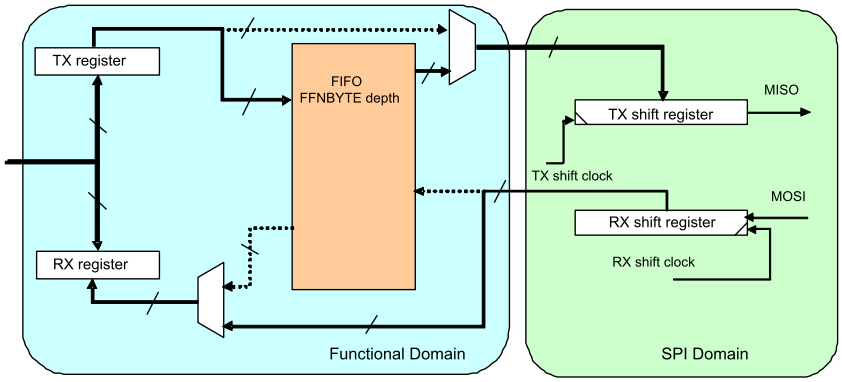

Configuration:
MCSPI_CH(i)CONF[TRM]=0x0 Transmit/receive mode enabled
MCSPI_CH(i)CONF[FFRE]=0x0 FIFO disabled on receive path
MCSPI_CH(i)CONF[FFWE]=0x1 FIFO enabled on transmit path

Figure 8-9. Transmit/Receive Mode With Both FIFO Directions Used

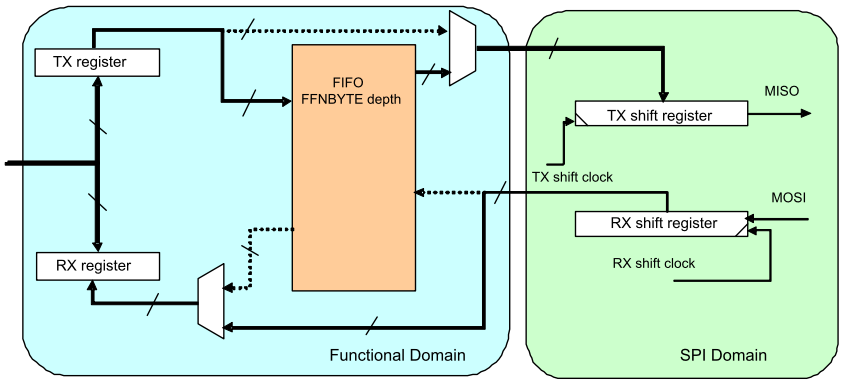

Configuration:
MCSPI_CH(i)CONF[TRM]=0x0 Transmit/receive mode enabled
MCSPI_CH(i)CONF[FFRE]=0x0 FIFO disabled on receive path
MCSPI_CH(i)CONF[FFWE]=0x1 FIFO enabled on transmit path

8.2.3.4.1.2 Buffer Almost Full

The bit-field MCSPI_XFERLEVEL[AFL] is required when the buffer is used to receive an SPI word from a slave (MCSPI_CHCONF[FFER] must be set to 1), and defines the Almost Full buffer status.

When the FIFO pointer reaches this level, an interrupt or a DMA request is sent to the local host to enable the system to read AFL+1 bytes from the receive register. AFL+1 must correspond to a multiple value of MCSPI_CHCONF[WL]. When DMA is used, the request is de-asserted after the first receive register read. No new request is asserted until it has performed the correct number of read accesses.

Copyright © 2017, Texas Instruments Incorporated

Figure 8-10. Buffer Almost Full Level (AFL)

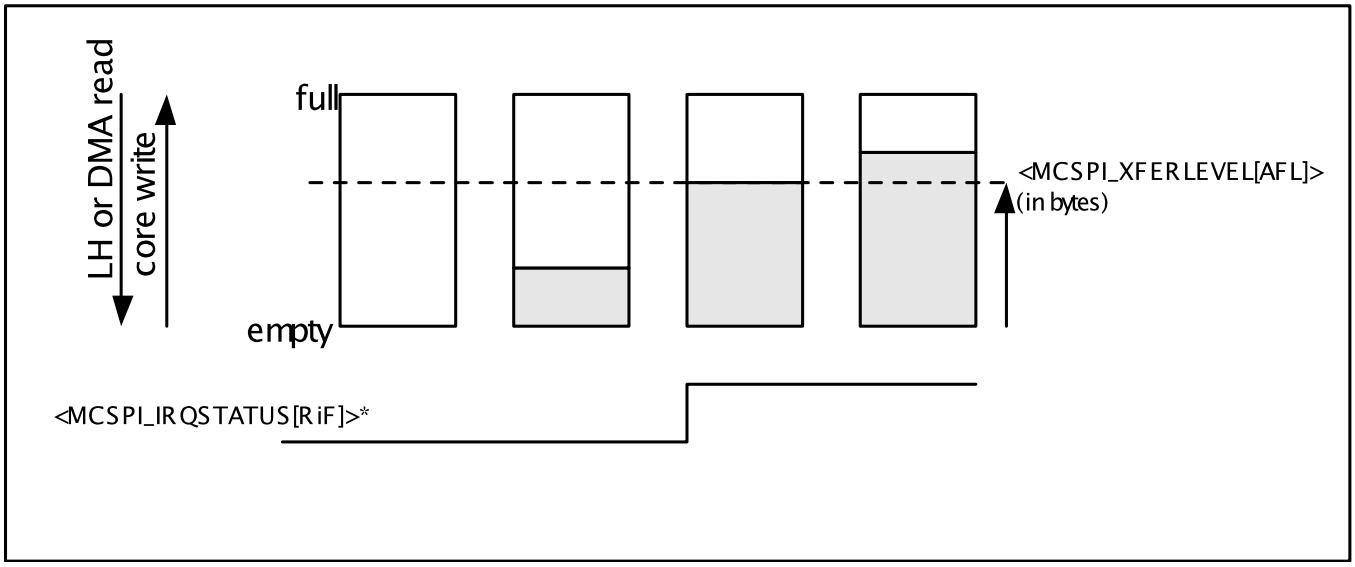

8.2.3.4.1.3 Buffer Almost Empty

The bit-field MCSPI_XFERLEVEL[AEL] is required when the buffer is used to transmit an SPI word to a slave (MCSPI_CHCONF[FFEW] must be set to 1), and defines the Almost Empty buffer status.

When the FIFO pointer has reached this level, an interrupt or a DMA request is sent to the local host to enable the system to write AEL+1 bytes to the transmit register. AEL+1 must correspond to a multiple value of MCSPI_CHCONF[WL]. When DMA is used, the request is de-asserted after the first transmit register write. No new request is asserted again until the system has performed the right number of write accesses.

Figure 8-11. Buffer Almost Empty Level (AEL)

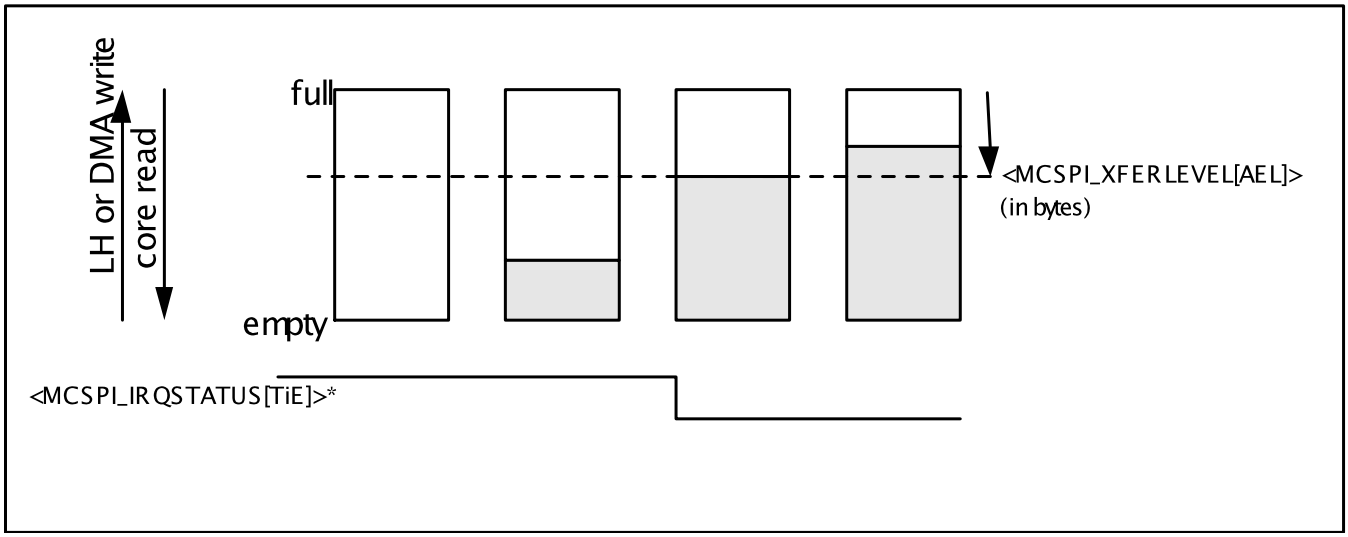

8.2.3.4.1.4 End of Transfer Management

When the FIFO buffer is enabled for a channel, the user configures the MCSPI_XFERLEVEL register, the AEL and AFL levels, and the WCNT bit field to define the number of SPI word to be transferred using the FIFO before enabling the channel.

Copyright © 2017, Texas Instruments Incorporated

This counter allows the controller to stop the transfer after a defined number of SPI word transfers. If WCNT is set to 0x0000, the counter is not used and the user must stop the transfer manually by disabling the channel, if the user does not know how many SPI transfers have been done. For a receive transfer, the software polls the corresponding FFE bit field and reads the receive register to empty the FIFO buffer. When the end of word count interrupt is generated, the user can disable the channel and poll on the MCSPI_CHSTAT[FFE] register to see if there is an SPI word in the FIFO buffer, and read the last words.

8.2.3.4.1.5 3- or 4-Pin Mode.

The external SPI bus interface can be configured to use a restricted set of pins, using the bit field MCSPI_MODULCTRL[1] PIN34 and depending on the targeted application:

- If MCSPI_MODULECTRL[1] is set to 0 (default value), the controller is in 4-pin mode, using the SPI pins CLKSPI, SOMI, SIMO, and chip-enable CS.
- If MCSPI_MODULECTRL[1] is set to 1, the controller is in 3-pin mode, using the SPI pins CLKSPI, SOMI, and SIMO.

In this mode, only one SPI device can be on the bus.

Figure 8-12. 3-Pin Mode System Overview

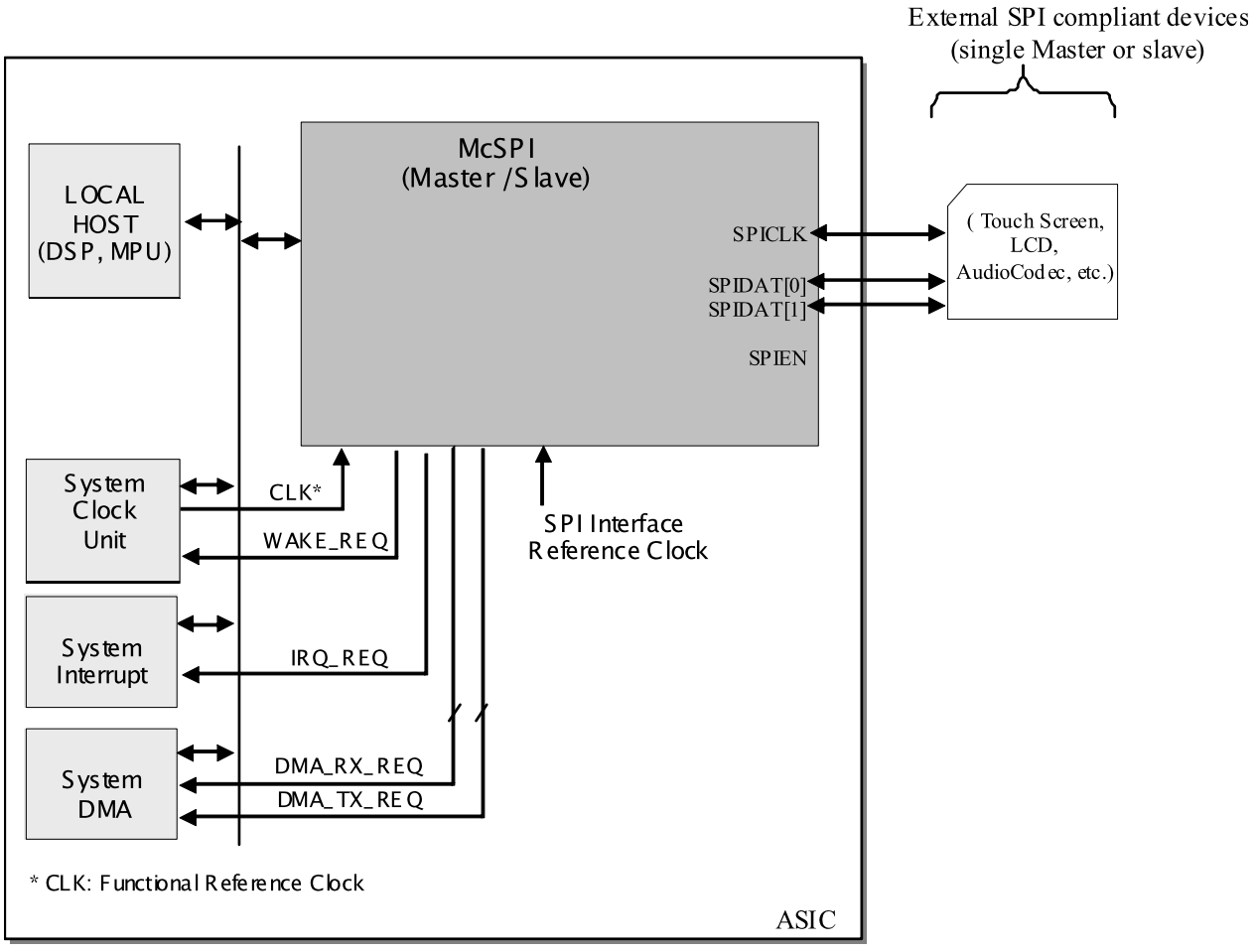

In 3-pin mode, not all options related to chip select management are used:

- MCSPI_CHxCONF[EPOL]
- MCSPI_CHxCONF[TCS0]
- MCSPI_CHxCONF[FORCE]

The chip select pin SPIEN is forced to 0 in this mode.

Copyright © 2017, Texas Instruments Incorporated

8.2.4 Slave Mode

SPI is in slave mode when the MS bit of the SPI_MODULCTRL register is set. In slave mode, SPI should be connected to only one external master device.

In slave mode, SPI initiates data transfer on the data lines (MISO/MOSI) when it receives an SPI clock (SPICLK) from the external SPI master device. The controller is able to work with or without a chip-select SPIEN, depending on the MCSPI_MODULCTRL[1] PIN34 bit setting. It also support transfers without a dead cycle between two successive words.

The following configurations are available for the slave channel:

- A channel enable, programmable with the EN bit of the SPI_CHCTRL register. This channel should be enabled before transmission and reception. Disabling the channel, outside data word transmission, is the user's responsibility.
- A transmitter register, SPI_TX, on top of the common shift register. If the transmitter register is empty, the TXS status bit of the SPI_CHSTAT register is set. When SPI is selected by an external master (active signal on the SPIEN port), the transmitter register content of the channel is always loaded in the shift register, whether it has been updated or not. The transmitter register should be loaded before SPI is selected by a master.
- A receiver register, SPI_RX, on top of the common shift register. If the receiver register is full, the RXS status bit of the SPI_CHSTAT register is set.
- A communication configuration with the following parameters in the MCSPI_CHCONF register:
  - Transmit and receive modes, programmable with the TRM bit.
  - SPI word length, programmable with the WL bits.
  - SPIEN polarity, programmable with the EPOL bit.
  - SPICLK polarity, programmable with the POL bit.
  - SPICLK phase, programmable with the PHA bit.
  - Use a FIFO buffer or not, programmable with FFER and FFEW, depending on transfer mode TRM.
  - The SPICLK frequency of a transfer is controlled by the external SPI master.
  - Two DMA requests events, read and write, to synchronize read/write accesses of the DMA controller with the activity of SPI. The DMA requests are enabled with the DMAR and DMAW bits of the MCSPI_CHCONF register.

8.2.4.1 Interrupts Events in Slave Mode

The interrupt events related to the transmitter register state are TX_empty and TX_underflow. The interrupt events related to the receiver register state are RX_full and RX_overflow.

8.2.4.1.1 TX_empty

The TX_empty event activates when the channel is enabled and its transmitter register becomes empty. Enabling the channel automatically raises this event. When the FIFO buffer is enabled (MCSPI_CHCONF[FFEW] set to 1), the TX_empty is asserted once there is enough space in buffer to write a number of bytes defined by MCSPI_XFERLEVEL[AEL].

The transmitter register must be loaded to remove the source of the interrupt, and the TX_empty interrupt status bit must be cleared for the interrupt line de-assertion (if the event is enabled as the interrupt source).

When FIFO is enabled, no new TX_empty event is asserted if the local host has not performed the number of writes into the transmitter register defined by MCSPI_XFERLEVEL[AEL]. The local host must perform the correct number of writes.

8.2.4.1.2 TX_underflow

The TX_underflow event activates when the channel is enabled and the transmitter register or FIFO (if buffer is enabled) is empty (not updated with new data), and when an external master device starts a data transfer with SPI (transmit and receive).

Copyright © 2017, Texas Instruments Incorporated

When FIFO is enabled, the data emitted while the underflow event is raised is not the last data written in the FIFO. The TX_underflow indicates an error (data loss) in slave mode.

To avoid having a TX_underflow event at the beginning of a transmission, the event TX_underflow is not activated when no data has been loaded into the transmitter register, because the channel has been enabled. The TX_underflow interrupt status bit must be cleared for an interrupt line de-assertion (if event is enabled as the interrupt source).

8.2.4.1.3 RX_ full

The RX_full event activates when the channel is enabled and the receiver is filled (transient event). When the FIFO buffer is enabled (MCSPI_CHCONF[FFER] set to 1), the RX_full is asserted once there is a number of bytes held in the buffer to read defined by MCSPI_XFERLEVEL[AFL].

The receiver register must be read to remove the source of the interrupt, and the RX_full interrupt status bit must be cleared for an interrupt line de-assertion (if the event is enabled as an interrupt source).

When FIFO is enabled, no new RX_full event is asserted if the local host has not performed the number of reads into the receive register defined by MCSPI_XFERLEVEL[AFL]. The local host must perform the correct number of reads.

8.2.4.1.4 RX_overflow

The RX_overflow event activates when the channel is enabled and the receiver register or FIFO (if the buffer is enabled) is full at the time of a new SPI word reception. The receiver register is always overwritten with the new SPI word. If FIFO is enabled and the data within the FIFO is overwritten, it must be corrupted.

The RX_overflow event should not appear in slave mode using the FIFO. The RX_overflow indicates an error (data loss) in slave mode. The RX_overflow interrupt status bit must be cleared for an interrupt line de-assertion (if the event is enabled as an interrupt source).

8.2.4.1.5 End-of-Word Count

The EOW (end-of-word count) event activates when the channel is enabled and configured to use the built-in FIFO. This interrupt is raised when the controller performs the number of transfers defined in the MCSPI_XFERLEVEL[WCNT] register. If the value is programmed to 0x0000, the counter is not enabled and this interrupt is not generated.

The end-of-word count interrupt also indicates that the SPI transfer is stopped on the channel using the FIFO buffer, once MCSPI_XFERLEVEL[WCNT] is not reloaded and the channel re-enabled. The end-of-word interrupt status bit must be cleared for the interrupt line de-assertion (if the event is enabled as an interrupt source).

8.2.4.2 Slave Transmit and Receive Mode

The slave transmit and receive mode is programmable (TRM bits set to 00 in the register SPI_CHCONF). After the channel is enabled, transmission and reception proceed with interrupt and DMA request events.

In slave transmit and receive mode, the transmitter register should be loaded before SPI is selected by an external SPI master device. The transmitter register or FIFO (if the use of a buffer is enabled) content is always loaded in the shift register, whether updated or not. The TX_underflow event activates, and does not prevent transmission.

Upon completion of SPI word transfer (EOT bit of the SPI_CHSTAT register is set), the received data is transferred to the channel receive register. This bit is meaningless when using the buffer for this channel.

The built-in FIFO is available in this mode and can be configured in one data direction, either transmit or receive, to ensure that the FIFO is seen as a unique 64-byte buffer. The FIFO can also be configured in both data transmit and receive directions, to ensure the FIFO is split into two separate 32-byte buffers with individual address space management. In this last case, the definition of the AEL and AFL levels is based on 64 bytes, and is the responsibility of the local host.

Copyright © 2017, Texas Instruments Incorporated

8.2.5 Interrupts

According to the transmitter register state and the receiver register state, the channel can issue interrupt events if enabled. Each interrupt event has a status bit in the SPI_IRQSTATUS register that indicates service is required, and an interrupt enable bit in the SPI_IRQENABLE register that enables the status to generate hardware interrupt requests. When an interrupt occurs and a mask is then applied on it (IRQENABLE), the interrupt line is not asserted again, even if the interrupt source has not been serviced.

SPI supports interrupt-driven operation and polling.

8.2.5.1 Interrupt-Driven Operation

Alternatively, an interrupt enable bit in the SPI_IRQENABLE register can be set to enable each of the events to generate interrupt requests when the corresponding event occurs. Status bits are automatically set by hardware logic conditions.

When an event occurs (the single interrupt line is asserted), the local host must:

- Read the SPI_IRQSTATUS register to identify which event occurred.
- Interrupt handling:
  - Read the receiver register that corresponds to the event, to remove the source of an RX_full event, or
  - Write into the transmitter register that corresponds to the event, to remove the source of a TX_empty event.
  - No action is needed to remove the source of the events TX_underflow and RX_overflow.
- Write a 1 into the corresponding bit of the SPI_IRQSTATUS register to clear the interrupt status and release the interrupt line.

The interrupt status bit should always be reset after channel enabling and before events are enabled as an interrupt source.

8.2.5.2 Polling

When the interrupt capability of an event is disabled in the SPI_IRQENABLE register, the interrupt line is not asserted and:

- The status bits in the SPI_IRQSTATUS register is polled by software to detect when the corresponding event occurs.
- Once the expected event occurs, the local host must read the receiver register that corresponds to the event to remove the source of an RX_full event, or write into the transmitter register that corresponds to the event to remove the source of a TX_empty event. No action is needed to remove the source of the events TX_underflow and RX_overflow.
- Writing a 1 into the corresponding bit of the SPI_IRQSTATUS register clears the interrupt status and does not affect the interrupt line state.

8.2.6 DMA Requests

SPI can be interfaced with a DMA controller. At the system level, the advantage is to discharge the local host of the data transfers. According to FIFO level (if using a buffer for the channel), the channel can issue DMA requests if enabled. The DMA requests must be disabled to get TX and RX interrupts. There are two DMA request lines for the channel.

8.2.6.1 FIFO Buffer Enabled

The DMA read request line asserts when the channel is enabled and a number of bytes defined in SPI_XFERLEVEL[AFL] bit field is held in the FIFO buffer for the receive register of the channel. A DMA read request can be individually masked with the DMAR bit of the SPI_CHCONF register. The DMA read request line is de-asserted on the first SPI word read completion of the receive register of the channel. No new DMA request is asserted if the user has not performed the correct number of read accesses, as defined by SPI_XFERLEVEL[AFL].

Copyright © 2017, Texas Instruments Incorporated

The DMA write request line asserts when the channel is enabled and the number of bytes held in the FIFO buffer is below the level defined by the SPI_XFERLEVEL[AEL] bit field. A DMA write request can be individually masked with the DMAW bit of the SPI_CHCONF register. The DMA write request line asserts when the channel is enabled and the number of bytes held in the FIFO buffer is below the level defined by the SPI_XFERLEVEL[AEL] bit field.

8.2.7 Reset

The module can be reset by software through the SoftReset bit of the SPI_SYSCONFIG register. The SPI_SYSCONFIG register is not sensitive to software reset. The SoftReset control bit is active high. The bit is automatically reset to 0 by the hardware.

A global ResetDone status bit is provided in the SPI_SYSCONFIG status register. The global ResetDone status bit can be monitored by the software to check if the module is ready to use following a reset.

8.3 Initialization and Configuration

This section describes a GSPI module initialization and configuration example for each of the two basic modes supported to transmit and receive at 100000 KHz.

8.3.1 Basic Initialization

(a) Enable the SPI module clock by invoking the following API:

```
PRCMPeripheralClkEnable(PRCM_GSPI,PRCM_RUN_MODE_CLK)
```

(b) Set the pinmux to bring out the SPI signals to the chip boundary at desired location:

```
PinTypeSPI(<pin_no>, <mode>).
```

(c) Soft reset the module:

```
SPIReset(GSPI_BASE)
```

8.3.2 Master Mode Operation Without Interrupt (Polling)

(a) Configure the SPI with following parameters:

- **Mode**: 4-pin/master
- **Sub mode**: 0
- **Bit Rate**: 100000 Hz
- **Chip Select**: Software-controlled/active high
- **Word Length**: 8 bits

```
SPIConfigSetExpClk(GSPI_BASE,PRCMPeripheralClockGet(PRCM_GSPI),
100000, SPI_MODE_MASTER,
SPI_SUB_MODE_0, (SPI_SW_CTRL_CS | SPI_4PIN_MODE|SPI_TURBO_OFF |
SPI_CS_ACTIVEHIGH |
SPI_WL_8))
```

(b) Enable SPI channel for communication:

```
SPIEnable(GSPI_BASE)
```

(c) Enable chip select:

```
SPICSEnable(GSPI_BASE)
```

(d) Write new data into TX FIFO to transmit over the interface:

```
SPIDataPut(GSPI_BASE,<UserData>);
```

(e) Read received data from the RX FIFO:

```
SPIDataGet(GSPI_BASE,&amp;<ulDummy>)
```

(f) Disable chip select:

```
SPICSDisable(GSPI_BASE)
```


Copyright © 2017, Texas Instruments Incorporated

8.3.3 Slave Mode Operation With Interrupt

(a) Set the interrupt vector table base and enable master interrupt for NVIC:

```
IntVTableBaseSet( <address_of_vector_table> )IntMasterEnable()
```

(b) Configure the SPI with following parameters:

- **Mode**: 4-pin/slave
- **Word Length**: 8 bits

```
SPIConfigSetExpClk(GSPI_BASE,PRCMPeripheralClockGet(PRCM_GSPI),
SPI_IF_BIT_RATE, SPI_MODE_SLAVE, SPI_SUB_MODE_0,
(SPI_HW_CTRL_CS |
SPI_4PIN_MODE |
SPI_TURBO_OFF |
SPI_CS_ACTIVEHIGH |
SPI_WL_8))
```

(c) Register the interrupt handler:

```
SPIIntRegister(GSPI_BASE, <SlaveIntHandler> )
```

(d) Enable the transmit empty and receive full interrupts:

```
SPIIntEnable(GSPI_BASE,SPI_INT_RX_FULL|SPI_INT_TX_EMPTY)
```

(e) Enable SPI channel for communication:

```
SPIEnable(GSPI_BASE)
```

8.3.4 Generic Interrupt Handler Implementation

```
void SlaveIntHandler()
{
  unsigned long ulDummy;
  unsigned long ulStatus;

  // Read the interrupt status
  ulStatus = SPIIntStatus(GSPI_BASE,true);

  // Acknowledge the interrupts
  SPIIntClear(GSPI_BASE,SPI_INT_RX_FULL|SPI_INT_TX_EMPTY);

  // If TX empty, write a new data into SPI register
  if(ulStatus & SPI_INT_TX_EMPTY)
  {
    SPIDataPut(GSPI_BASE,
<user_data>)
  }
  // if RX is full, readout the data from SPI
  if(ulStatus & SPI_INT_RX_FULL)
  {
        SPIDataGetNonBlocking(GSPI_BASE,
&amp;ulDummy);
  }
}
```

8.4 Access to Data Registers

This section describes the supported data accesses (read or write) to and from the data receiver registers SPI_RX and data transmitter registers SPI_TX.

Copyright © 2017, Texas Instruments Incorporated

SPI supports only one SPI word per register (receiver or transmitter) and does not support successive 8-bit or 16-bit accesses for a single SPI word. The SPI word received is always right-justified on the LSbit of the 32-bit SPI_RX register, and the SPI word to transmit is always right-justified on the LSbit of the 32-bit SPI_TX register. The bits above SPI word length are ignored, and the content of the data registers is not reset between the SPI data transfers. The coherence between the number of bits of the SPI word, the number of bits of the access, and the enabled byte is the responsibility of the user. Only aligned accesses are supported. In master mode, data should not be written in the transmit register when the channel is disabled.

8.5 Module Initialization

Figure 8-13. Flow Chart - Module Initialization

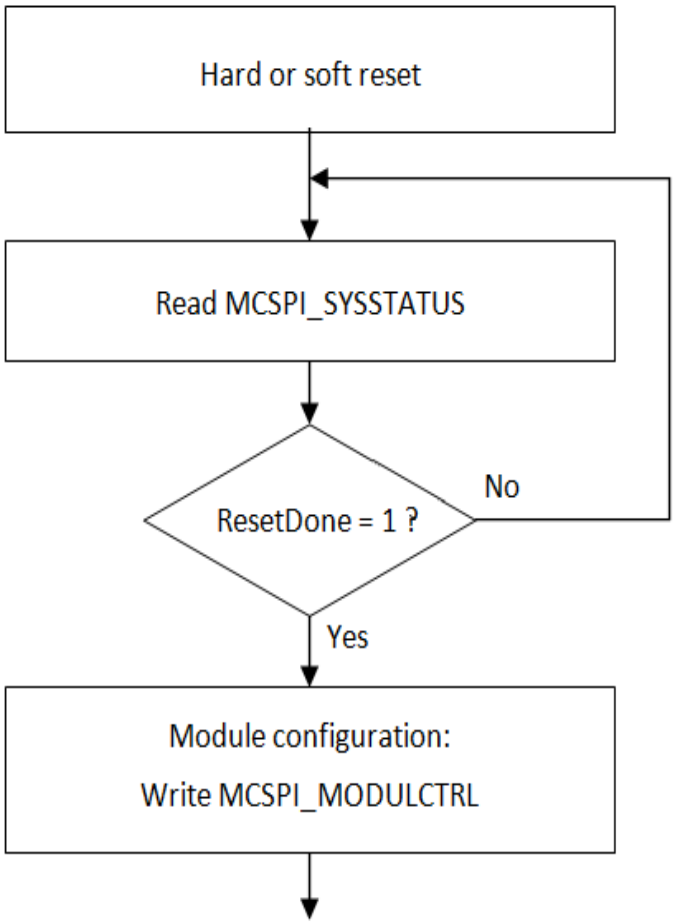

Before the ResetDone bit is set, the clocks CLK and CLKSPIREF must be provided to the module. To avoid hazardous behavior, reset the module before changing from master mode to slave mode or from slave mode to master mode.

8.5.1 Common Transfer Sequence

SPI module allows the transfer of one or several words, according to different modes:

- Master normal, master turbo, slave
- Transmit – receive
- Write and read requests: interrupts, DMA
- SPIEN lines assertion/deassertion: automatic, manual

Copyright © 2017, Texas Instruments Incorporated

For all these flows, the host process contains the main process and the interrupt routines. The interrupt routines are called on the interrupt signals, or by an internal call if the module is used in polling mode.

Figure 8-14 represents the main sequence common to all transfers.

Figure 8-14. Flow Chart - Common Transfer Sequence

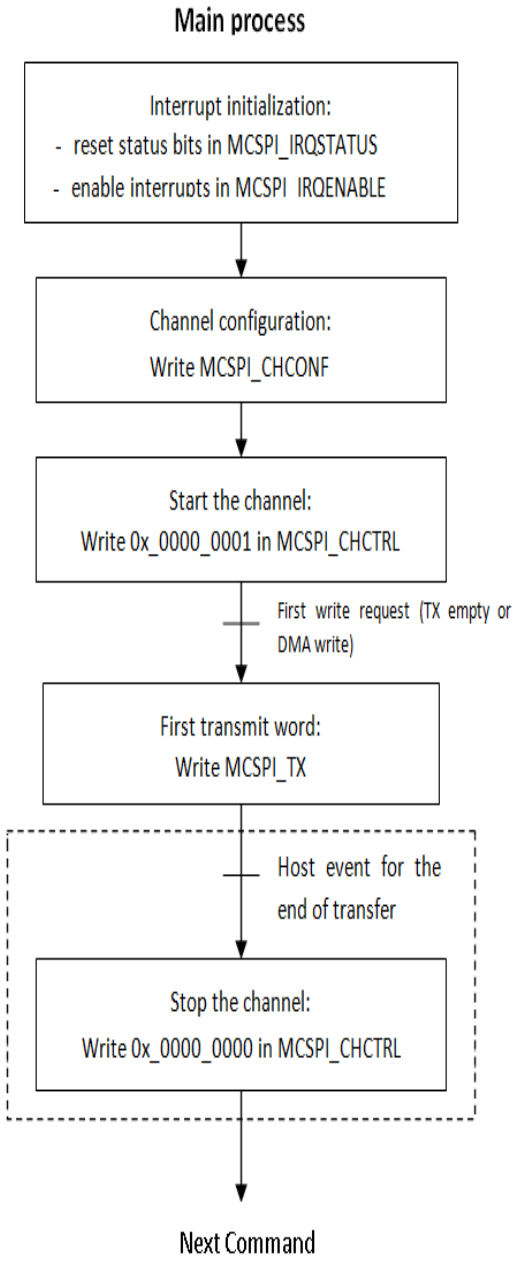

8.5.2 End of Transfer Sequences

In these sequences, some soft variables are used:

- write_count = 0
- read_count. = 0
- channel_enable = FALSE
- last_transfer = FALSE

Copyright © 2017, Texas Instruments Incorporated

- last_request = FALSE

These variables are initialized before starting the channel.

The executed transfer has size of N. If the requests are configured in DMA, write_count and read_count are assigned with N.

Figure 8-15 highlights the interrupt routine executed for N times until write_count and read_count reached value N, after which the transfer is over and the main process disables the channel.

Figure 8-15. Flow Chart - Transmit and Receive (Master and Slave)

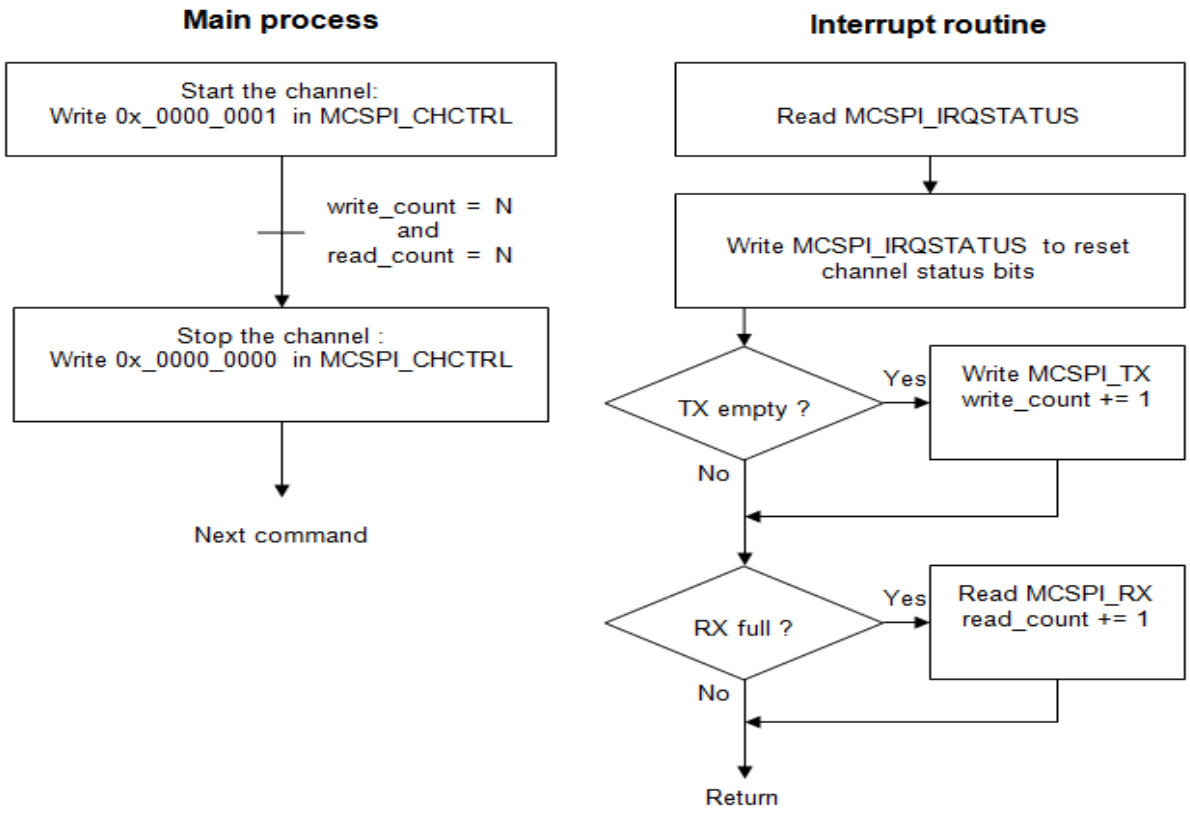

8.5.3 FIFO Mode

These flows describe the transfer with FIFO.

The SPI module allows the transfer of one or several words, according to different modes:

- Master normal, master turbo, slave
- Transmit – receive
- Write and read requests: IRQ, DMA

For each flow, the host process contains the main process and the interrupt routine. This routine is called on the IRQ signals, or by an internal call if the module is used in polling mode.

Copyright © 2017, Texas Instruments Incorporated

8.5.3.1 Common Transfer Sequence

In transmit and receive mode, the FIFO can be enabled for write or read request only. The SPI module starts the transfer only when the first write request is released, by writing the SPI_TX register. See Figure 8-16.

This first write request is managed by the IRQ routine or DMA handler.

The sequence varies according to whether word count is used or not (SPI_XFERLEVEL : WCNT ≠ 0 or not). The AEL or AFL values can be different, but they must be a multiple of the word size in the FIFO: 1, 2, or 4 bytes, according to word length.

In these sequences, the transfer to execute has a size of N words. In these sequences, the numbers of word written or read for each write or read FIFO request are:

- write_request_size
- read_request_size

If they are not submultiples of N, the last request sizes are:

- last_write_request_size (< write_request_size)
- last_read_request_size. (< read_request_size)

Copyright © 2017, Texas Instruments Incorporated

Figure 8-16. Flow Chart - FIFO Mode Common Sequence (Master)

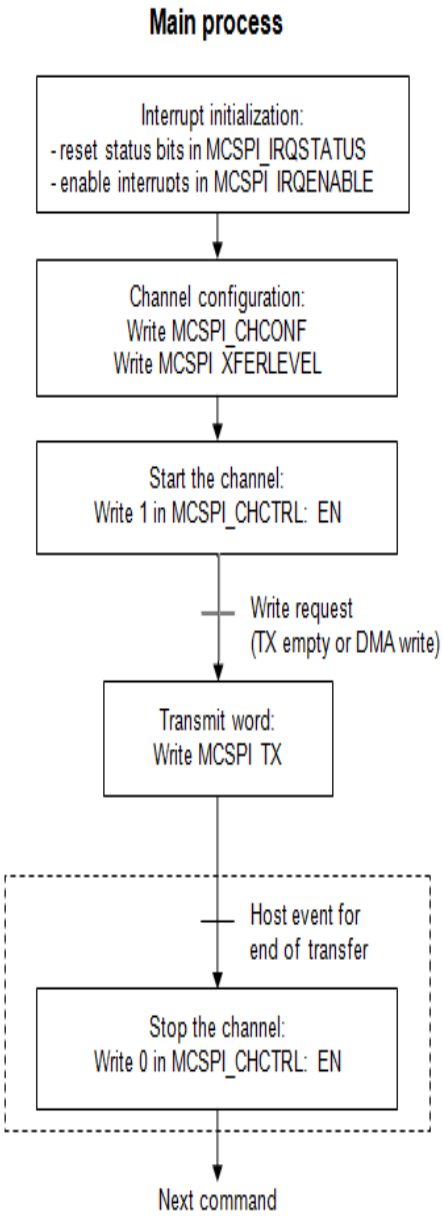

In these sequences, some soft variables are used:

- write_count = N
- read_count = N
- last_request = FALSE

These variables are initialized before starting the channel.

Copyright © 2017, Texas Instruments Incorporated

8.5.3.2 Transmit Receive with Word Count

Flow of a transfer in transmit – receive mode, with word count.

Figure 8-17. Flow Chart - FIFO Mode Transmit and Receive with Word Count (Master)

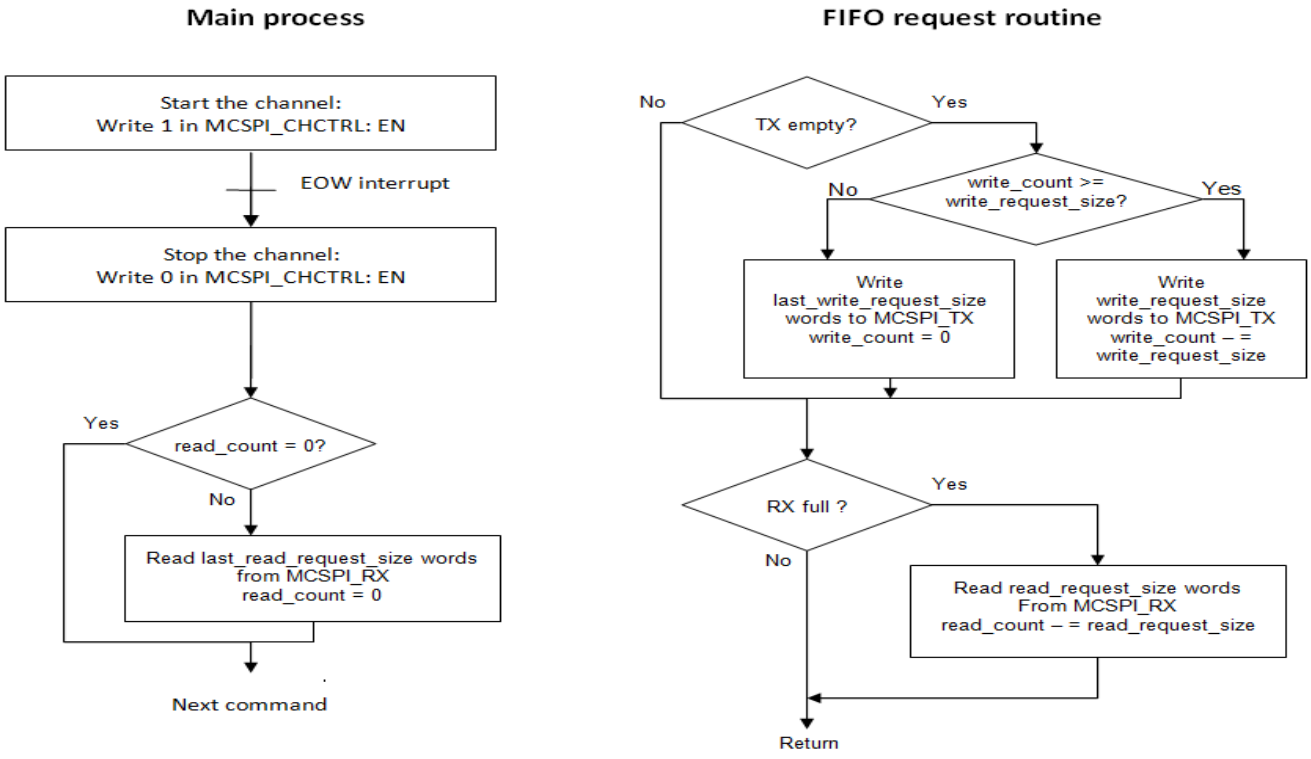

Copyright © 2017, Texas Instruments Incorporated

8.5.3.3 Transmit Receive without Word Count

Flow of a transfer in transmit – receive mode, without word count.

Figure 8-18. Flow Chart - FIFO Mode Transmit and Receive without Word Count (Master)

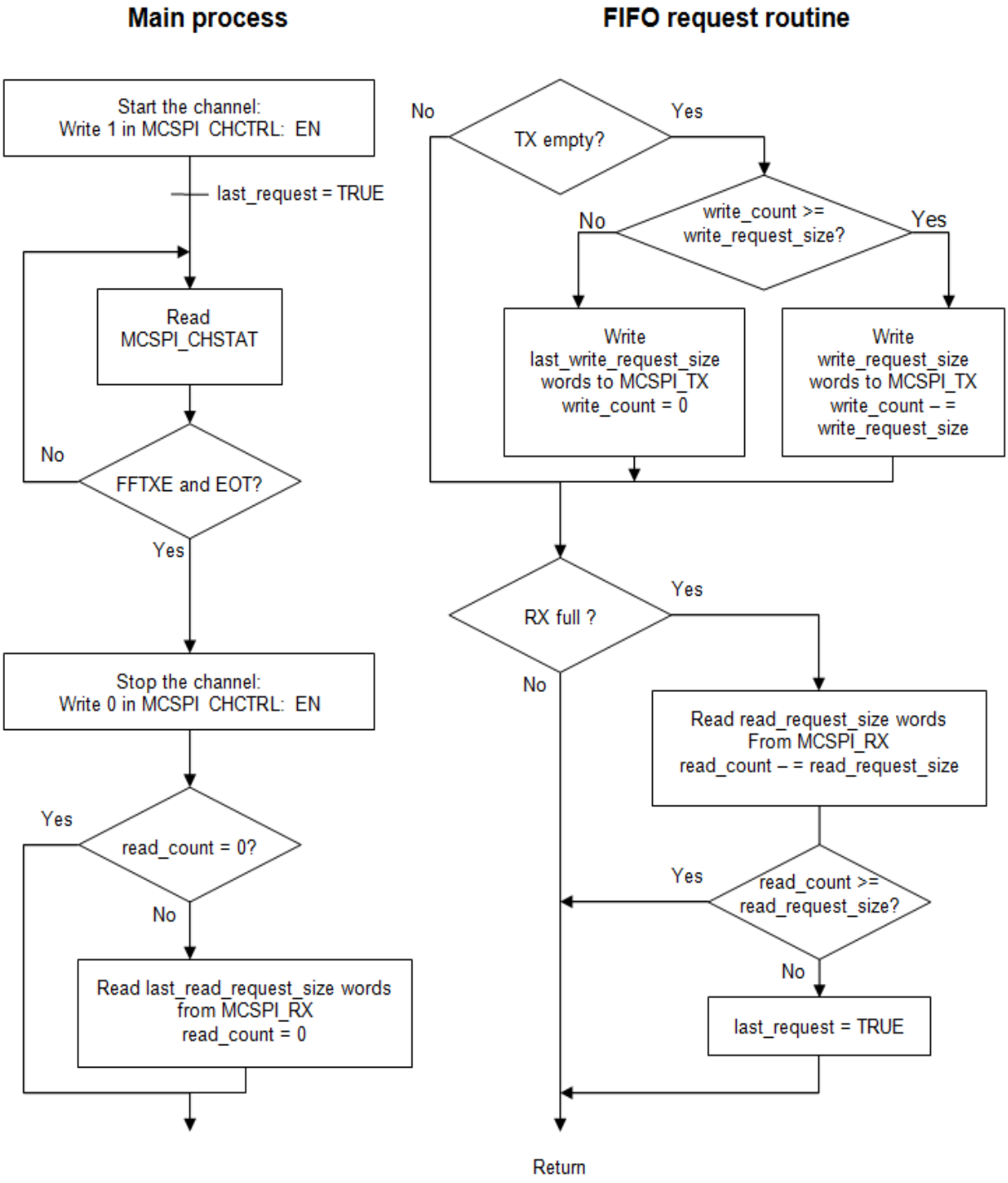

Copyright © 2017, Texas Instruments Incorporated

8.6 SPI Registers

Table 8-6 lists the memory-mapped registers for the SPI. All register offset addresses not listed in Table 8-6 should be considered as reserved locations, and the register contents should not be modified.

Table 8-6. SPI Registers

Offset	Acronym	Register Name	Section
10h	SPI_SYSCONFIG	System Configuration	Section 8.6.1
114h	SPI_SYSSTATUS	System Status Register	Section 8.6.2
118h	SPI_IRQSTATUS	Interrupt Status Register	Section 8.6.3
11Ch	SPI_IRQENABLE	Interrupt Enable Register	Section 8.6.4
128h	SPI_MODULCTRL	Module Control Register	Section 8.6.5
12Ch	SPI_CHCONF	Channel Configuration Register	Section 8.6.6
130h	SPI_CHSTAT	Channel Status Register	Section 8.6.7
134h	SPI_CHCTRL	Channel Control Register	Section 8.6.8
138h	SPI_TX	Channel Transmitter Register	Section 8.6.9
13Ch	SPI_RX	Channel Receiver Register	Section 8.6.10
17Ch	SPI_XFERLEVEL	Transfer Levels Register	Section 8.6.11

Copyright © 2017, Texas Instruments Incorporated

8.6.1 SPI_SYSCONFIG Register (offset = 10h) [reset = 0h]

SPI_SYSCONFIG is shown in Figure 8-19 and described in Table 8-7.

Clock management configuration.

Figure 8-19. SPI_SYSCONFIG Register

31	30	29	28	27	26	25	24
RESERVED							
R-0h							
23	22	21	20	19	18	17	16
RESERVED							
R-0h							
15	14	13	12	11	10	9	8
RESERVED							
R-0h							
7	6	5	4	3	2	1	0
RESERVED							SOFTRESET
R-0h							R/W-0h

LEGEND: R/W = Read/Write; R = Read only; W1toCl = Write 1 to clear bit; *-n* = value after reset

Table 8-7. SPI_SYSCONFIG Register Field Descriptions

Bit	Field	Type	Reset	Description
31-1	RESERVED	R	0h	
0	SOFTRESET	R/W	0h	Software reset. (Optional) 0h (W) = No action 0h (R) = Reset done, no pending action 1h (W) = Initiate software reset 1h (R) = Reset (software or other) ongoing

Copyright © 2017, Texas Instruments Incorporated

8.6.2 SPI_SYSSTATUS Register (offset = 114h) [reset = 0h]

SPI_SYSSTATUS is shown in Figure 8-20 and described in Table 8-8.

This register provides status information about the module excluding the interrupt status information.

Figure 8-20. SPI_SYSSTATUS Register

31	30	29	28	27	26	25	24
RESERVED							
R-0h							
23	22	21	20	19	18	17	16
RESERVED							
R-0h							
15	14	13	12	11	10	9	8
RESERVED							
R-0h							
7	6	5	4	3	2	1	0
RESERVED							RESETDONE
R-0h							R-0h

LEGEND: R/W = Read/Write; R = Read only; W1toCl = Write 1 to clear bit; *-n* = value after reset

Table 8-8. SPI_SYSSTATUS Register Field Descriptions

Bit	Field	Type	Reset	Description
31-1	RESERVED	R	0h	
0	RESETDONE	R	0h	Internal Reset Monitoring 0h (R) = Internal module reset is on-going 1h (R) = Reset completed

Copyright © 2017, Texas Instruments Incorporated

8.6.3 SPI_IRQSTATUS Register (offset = 118h) [reset = 0h]

SPI_IRQSTATUS is shown in Figure 8-21 and described in Table 8-9.

The interrupt status regroups all the status of the module internal events that can generate an interrupt.

Figure 8-21. SPI_IRQSTATUS Register

31	30	29	28	27	26	25	24
RESERVED							
R-0h							
23	22	21	20	19	18	17	16
RESERVED						EOW	WKS
R-0h						R/W-0h	R/W-0h
15	14	13	12	11	10	9	8
RESERVED							
R-0h							
7	6	5	4	3	2	1	0
RESERVED				RX_OVERFLOW	RX_FULL	TX_UNDERFLOW	TX_EMPTY
R-0h				R/W-0h	R/W-0h	R/W-0h	R/W-0h

LEGEND: R/W = Read/Write; R = Read only; W1toCl = Write 1 to clear bit; *-n* = value after reset

Table 8-9. SPI_IRQSTATUS Register Field Descriptions

Bit	Field	Type	Reset	Description
31-18	RESERVED	R	0h	
17	EOW	R/W	0h	End of word count event when a channel is enabled using the FIFO buffer and the channel had sent the number of SPI word defined by SPI_XFERLEVEL[WCNT]. 0h (W) = Event status bit unchanged 0h (R) = Event false 1h (W) = Event status bit is reset 1h (R) = Event is pending
16	WKS	R/W	0h	Wake Up event in slave mode when an active control signal is detected on the SPIEN line programmed in the field SPI_CHCONF[SPIENSLV]. 0h (W) = Event status bit unchanged 0h (R) = Event false 1h (W) = Event status bit is reset 1h (R) = Event is pending
15-4	RESERVED	R	0h	
3	RX_OVERFLOW	R/W	0h	Receiver register overflow (slave mode only). 0h (W) = Event status bit unchanged 0h (R) = Event false 1h (W) = Event status bit is reset 1h (R) = Event is pending
2	RX_FULL	R/W	0h	Receiver register full or almost full. This bit indicate FIFO almost full status when built-in FIFO is use for receive register (SPI_CHCONF[FFER] is set). 0h (W) = Event status bit unchanged 0h (R) = Event false 1h (W) = Event status bit is reset 1h (R) = Event is pending

Copyright © 2017, Texas Instruments Incorporated

Table 8-9. SPI_IRQSTATUS Register Field Descriptions (continued)

Bit	Field	Type	Reset	Description
1	TX_UNDERFLOW	R/W	0h	Transmitter register underflow. 0h (W) = Event status bit unchanged 0h (R) = Event false 1h (W) = Event status bit is reset 1h (R) = Event is pending
0	TX_EMPTY	R/W	0h	Transmitter register empty or almost empty. This bit indicate FIFO almost full status when built-in FIFO is use for transmit register (SPI_CHCONF[FFEW] is set). 0h (W) = Event status bit unchanged 0h (R) = Event false 1h (W) = Event status bit is reset 1h (R) = Event is pending

Copyright © 2017, Texas Instruments Incorporated

8.6.4 SPI_IRQENABLE Register (offset = 11Ch) [reset = 0h]

SPI_IRQENABLE is shown in Figure 8-22 and described in Table 8-10.

This register allows the user to enable and disable the module internal sources of interrupt, on an event-by-event basis.

Figure 8-22. SPI_IRQENABLE Register

31	30	29	28	27	26	25	24
RESERVED							
R-0h							
23	22	21	20	19	18	17	16
RESERVED						EOWE	WKE
R-0h						R/W-0h	R/W-0h
15	14	13	12	11	10	9	8
RESERVED							
R-0h							
7	6	5	4	3	2	1	0
RESERVED				RX_OVERFLOW_ENABLE	RX_FULL_ENABLE	TX_UNDERFLOW_ENABLE	TX_EMPTY_ENABLE
R-0h				R/W-0h	R/W-0h	R/W-0h	R/W-0h

LEGEND: R/W = Read/Write; R = Read only; W1toCl = Write 1 to clear bit; *-n* = value after reset

Table 8-10. SPI_IRQENABLE Register Field Descriptions

Bit	Field	Type	Reset	Description
31-18	RESERVED	R	0h	
17	EOWE	R/W	0h	End of word count Interrupt Enable. 0h = Interrupt disabled 1h = Interrupt enabled
16	WKE	R/W	0h	Wake-up event interrupt enable in slave mode when an active control signal is detected on the SPIEN line programmed in the field SPI_CHCONF[SPIENSLV] 0h = Interrupt disabled 1h = Interrupt enabled
15-4	RESERVED	R	0h	
3	RX_OVERFLOW_ENABLE	R/W	0h	Receiver register overflow interrupt enable. 0h = Interrupt disabled 1h = Interrupt enabled
2	RX_FULL_ENABLE	R/W	0h	Receiver register full or almost full interrupt enable. 0h = Interrupt disabled 1h = Interrupt enabled
1	TX_UNDERFLOW_ENABLE	R/W	0h	Transmitter register underflow interrupt enable. 0h = Interrupt disabled 1h = Interrupt enabled
0	TX_EMPTY_ENABLE	R/W	0h	Transmitter register empty or almost empty interrupt enable. 0h = Interrupt disabled 1h = Interrupt enabled

Copyright © 2017, Texas Instruments Incorporated

8.6.5 SPI_MODULCTRL Register (offset = 128h) [reset = 4h]

SPI_MODULCTRL is shown in Figure 8-23 and described in Table 8-11.

This register is dedicated to the configuration of the serial port interface.

Figure 8-23. SPI_MODULCTRL Register

31	30	29	28	27	26	25	24
RESERVED							
R-0h							
23	22	21	20	19	18	17	16
RESERVED							
R-0h							
15	14	13	12	11	10	9	8
RESERVED							
R-0h							
7	6	5	4	3	2	1	0
RESERVED	RESERVED				MS	PIN34	SINGLE
R-0h	R-0h				R/W-1h	R/W-0h	R/W-0h

LEGEND: R/W = Read/Write; R = Read only; W1toCl = Write 1 to clear bit; *-n* = value after reset

Table 8-11. SPI_MODULCTRL Register Field Descriptions

Bit	Field	Type	Reset	Description
31-8	RESERVED	R	0h	
7-3	RESERVED	R	0h	
2	MS	R/W	1h	Master/ Slave 0h = Master - The module generates the SPICLK and SPIEN 1h = Slave - The module receives the SPICLK and SPIEN
1	PIN34	R/W	0h	Pin mode selection: 3 wire vs 4 wire. This register is used to configure the SPI pin mode, in master or slave mode. If asserted the controller only use SIMO,SOMI and SPICLK clock pin for spi transfers. 0h = SPIEN is used as a chip select. 1h = SPIEN is not used. In this mode all related option to chip select have no meaning.
0	SINGLE	R/W	0h	Channel enable (master mode only) 1h = Channel will be used in master mode. This bit must be set in Force SPIEN mode.

Copyright © 2017, Texas Instruments Incorporated

8.6.6 SPI_CHCONF Register (offset = 12Ch) [reset = 60000h]

SPI_CHCONF is shown in Figure 8-24 and described in Table 8-12.

This register is dedicated to the configuration of the channel. The table below lists the allowed data lines configurations per channel. The user must program which data line to use and in which direction (receive or transmit), according to the single data pin or two-pin interface mode shared with the external slave or master device.

IS	DPE1	DPE0	TRM (Transmit and Receive)
0	0	0	supported
0	0	1	supported
0	1	0	supported
0	1	1	NOT supported (unpredictable result)
1	0	0	supported
1	0	1	supported
1	1	0	supported
1	1	1	NOT supported (unpredictable result)

Figure 8-24. SPI_CHCONF Register

31	30	29	28	27	26	25	24
RESERVED		CLKG	FFER	FFEW	RESERVED		
R-0h		R/W-0h	R/W-0h	R/W-0h	R-0h		
23	22	21	20	19	18	17	16
RESERVED			FORCE	TURBO	IS	DPE1	DPE0
R-0h			R/W-0h	R/W-0h	R/W-1h	R/W-1h	R/W-0h
15	14	13	12	11	10	9	8
DMAR	DMARW	TRM		WL			
R/W-0h	R/W-0h	R/W-0h		R/W-0h			
7	6	5	4	3	2	1	0
WL	EPOL	CLKD				POL	PHA
R/W-0h	R/W-0h	R/W-0h				R/W-0h	R/W-0h

LEGEND: R/W = Read/Write; R = Read only; W1toCl = Write 1 to clear bit; *-n* = value after reset

Table 8-12. SPI_CHCONF Register Field Descriptions

Bit	Field	Type	Reset	Description
31-30	RESERVED	R	0h	
29	CLKG	R/W	0h	Clock divider granularity. This register defines the granularity of channel clock divider: power of two or one clock cycle granularity. When this bit is set the register SPI_CHCTRL[EXTCLK] must be configured to reach a maximum of 4096 clock divider ratio. Then the clock divider ratio is a concatenation of SPI_CHCONF[CLKD] and SPI_CHCTRL[EXTCLK] values 0h = Clock granularity of power of two 1h = One clock cycle granularity
28	FFER	R/W	0h	FIFO enabled for receive: Only one channel can have this bit field set. 0h = The buffer is not used to receive data. 1h = The buffer is used to receive data.
27	FFEW	R/W	0h	FIFO enabled for transmit: Only one channel can have this bit field set. 0h = The buffer is not used to transmit data. 1h = The buffer is used to transmit data.
26-21	RESERVED	R	0h	

Copyright © 2017, Texas Instruments Incorporated

Table 8-12. SPI_CHCONF Register Field Descriptions (continued)

Bit	Field	Type	Reset	Description
20	FORCE	R/W	0h	Manual SPIEN assertion to keep SPIEN active between SPI words (single channel master mode only) 0h = Writing 0 into this bit drives low the SPIEN line when SPI_CHCONF[EPOL] = 0, and drives it high when SPI_CHCONF[EPOL] = 1. 1h = Writing 1 into this bit drives high the SPIEN line when SPI_CHCONF[EPOL] = 0, and drives it low when SPI_CHCONF[EPOL] = 1
19	TURBO	R/W	0h	Turbo mode 0h = Turbo is deactivated (recommended for single SPI word transfer) 1h = Turbo is activated to maximize the throughput for multi SPI words transfer.
18	IS	R/W	1h	Input select 0h = Data Line0 (SPIDAT[0]) selected for reception. 1h = Data Line1 (SPIDAT[1]) selected for reception
17	DPE1	R/W	1h	Transmission enable for data line 1 0h = Data Line1 (SPIDAT[1]) selected for transmission 1h = No transmission on data line 1 (SPIDAT[1])
16	DPE0	R/W	0h	Transmission enable for data line 0 0h = Data line 0 (SPIDAT[0]) selected for transmission 1h = No transmission on data line 0 (SPIDAT[0])
15	DMAR	R/W	0h	DMA read request. The DMA read request line is asserted when the channel is enabled and a new data is available in the receive register of the channel. The DMA read request line is deasserted on read completion of the receive register of the channel. 0h = DMA read request disabled 1h = DMA read request enabled
14	DMARW	R/W	0h	DMA write request. The DMA write request line is asserted when The channel is enabled and the transmitter register of the channel is empty. The DMA write request line is deasserted on load completion of the transmitter register of the channel. 0h = DMA write request disabled 1h = DMA write request enabled
13-12	TRM	R/W	0h	Transmit receive modes 0h = Transmit and receive mode
11-7	WL	R/W	0h	SPI word length 7h = The SPI word is 8-bits long Fh = The SPI word is 16-bits long 1Fh = The SPI word is 32-bits long
6	EPOL	R/W	0h	SPIEN polarity 0h = SPIEN is held high during the active state. 1h = SPIEN is held low during the active state.

Copyright © 2017, Texas Instruments Incorporated

Table 8-12. SPI_CHCONF Register Field Descriptions (continued)

Bit	Field	Type	Reset	Description
5-2	CLKD	R/W	0h	Frequency divider for SPICLK. (Only when the module is a master SPI device). A programmable clock divider divides the SPI reference clock (CLKSPIREF) with a 4-bit value, and results in a new clock SPICLK available to shift-in and shiftout data. 0h = 1 1h = 2 2h = 4 3h = 8 4h = 16 5h = 32 6h = 64 7h = 128 8h = 256 9h = 512 Ah = 1024 Bh = 2048 Ch = 4096 Dh = 8192 Eh = 16384 Fh = 32768
1	POL	R/W	0h	SPICLK polarity 0h = SPICLK is held high during the active state 1h = SPICLK is held low during the active state
0	PHA	R/W	0h	SPICLK phase 0h = Data are latched on odd numbered edges of SPICLK. 1h = Data are latched on even numbered edges of SPICLK.

Copyright © 2017, Texas Instruments Incorporated

8.6.7 SPI_CHSTAT Register (offset = 130h) [reset = 0h]

SPI_CHSTAT is shown in Figure 8-25 and described in Table 8-13.

This register provides status information about the transmitter and receiver registers of the channel.

Figure 8-25. SPI_CHSTAT Register

31	30	29	28	27	26	25	24
RESERVED							
R-0h							
23	22	21	20	19	18	17	16
RESERVED							
R-0h							
15	14	13	12	11	10	9	8
RESERVED							
R-0h							
7	6	5	4	3	2	1	0
RESERVED	RXFFF	RXFFE	TXFFF	TXFFE	EOT	TXS	RXS
R-0h	R-0h	R-0h	R-0h	R-0h	R-0h	R-0h	R-0h

LEGEND: R/W = Read/Write; R = Read only; W1toCl = Write 1 to clear bit; *-n* = value after reset

Table 8-13. SPI_CHSTAT Register Field Descriptions

Bit	Field	Type	Reset	Description
31-7	RESERVED	R	0h	
6	RXFFF	R	0h	Channel FIFO receive buffer full status 0h (R) = FIFO receive buffer is not full 1h (R) = FIFO receive buffer is full
5	RXFFE	R	0h	Channel FIFO receive buffer empty status 0h (R) = FIFO receive buffer is not empty 1h (R) = FIFO receive buffer is empty
4	TXFFF	R	0h	Channel FIFO transmit buffer full status 0h (R) = FIFO transmit buffer is not full 1h (R) = FIFO transmit buffer is full
3	TXFFE	R	0h	Channel FIFO transmit buffer empty status 0h (R) = FIFO transmit buffer is not empty 1h (R) = FIFO transmit buffer is empty
2	EOT	R	0h	Channel end of transfer status. The definitions of beginning and end of transfer vary with master versus slave and the transfer format (turbo mode). See dedicated chapters for details. 0h (R) = This flag is automatically cleared when the shift register is loaded with the data from the transmitter register (beginning of transfer). 1h (R) = This flag is automatically set to one at the end of an SPI transfer.
1	TXS	R	0h	Channel transmitter register status 0h (R) = Register is full 1h (R) = Register is empty
0	RXS	R	0h	Channel receiver register status 0h (R) = Register is empty 1h (R) = Register is full

Copyright © 2017, Texas Instruments Incorporated

8.6.8 SPI_CHCTRL Register (offset = 134h) [reset = 0h]

SPI_CHCTRL is shown in Figure 8-26 and described in Table 8-14.

This register enables the channel and defines the extended clock ratio with one clock cycle granularity.

Figure 8-26. SPI_CHCTRL Register

31	30	29	28	27	26	25	24	23	22	21	20	19	18	17	16
RESERVED															
R-0h															
15	14	13	12	11	10	9	8	7	6	5	4	3	2	1	0
EXTCLK								RESERVED							EN
R/W-0h								R-0h							R/W-0h

LEGEND: R/W = Read/Write; R = Read only; W1toCl = Write 1 to clear bit; *-n* = value after reset

Table 8-14. SPI_CHCTRL Register Field Descriptions

Bit	Field	Type	Reset	Description
31-16	RESERVED	R	0h	
15-8	EXTCLK	R/W	0h	Clock ratio extension This register is used to concatenate with the SPI_CHCONF[CLKD] register for the clock ratio only when the granularity is one clock cycle (SPI_CHCONF[CLKG] set to 1). Then, the max value reached is 4096 clock divider ratio. 0h = Clock ratio is CLKD + 1 1h = Clock ratio is CLKD + 1 + 16 FFh = Clock ratio is CLKD + 1 + 4080
7-1	RESERVED	R	0h	
0	EN	R/W	0h	Channel enable 0h = Channel is not active 1h = Channel is active

Copyright © 2017, Texas Instruments Incorporated

8.6.9 SPI_TX Register (offset = 138h) [reset = 0h]

SPI_TX is shown in Figure 8-27 and described in Table 8-15.

This register contains a single SPI word to transmit on the serial link, depending on SPI word length. See Chapter Access to data registers for the list of supported accesses; the little endian host accesses the SPI 8-bit word on 0x00, while the big endian host accesses it on 0x03.

Figure 8-27. SPI_TX Register

31	30	29	28	27	26	25	24	23	22	21	20	19	18	17	16	15	14	13	12	11	10	9	8	7	6	5	4	3	2	1	0
TDATA																															
R/W-0h																															

LEGEND: R/W = Read/Write; R = Read only; W1toCl = Write 1 to clear bit; *-n* = value after reset

Table 8-15. SPI_TX Register Field Descriptions

Bit	Field	Type	Reset	Description
31-0	TDATA	R/W	0h	Channel data to transmit

Copyright © 2017, Texas Instruments Incorporated

8.6.10 SPI_RX Register (offset = 13Ch) [reset = 0h]

SPI_RX is shown in Figure 8-28 and described in Table 8-16.

This register contains a single SPI word received through the serial link, depending on SPI word length. See Chapter Access to data registers for the list of supported accesses; the little endian host accesses the SPI 8-bit word on 0x00, while the big endian host accesses it on 0x03.

Figure 8-28. SPI_RX Register

31	30	29	28	27	26	25	24	23	22	21	20	19	18	17	16	15	14	13	12	11	10	9	8	7	6	5	4	3	2	1	0
RDATA																															
R-0h																															

LEGEND: R/W = Read/Write; R = Read only; W1toCl = Write 1 to clear bit; *-n* = value after reset

Table 8-16. SPI_RX Register Field Descriptions

Bit	Field	Type	Reset	Description
31-0	RDATA	R	0h	Channel received data

Copyright © 2017, Texas Instruments Incorporated

8.6.11 SPI_XFERLEVEL Register (offset = 17Ch) [reset = 0h]

SPI_XFERLEVEL is shown in Figure 8-29 and described in Table 8-17.

This register provides the transfer levels required to use the FIFO buffer during transfer.

Figure 8-29. SPI_XFERLEVEL Register

31	30	29	28	27	26	25	24	23	22	21	20	19	18	17	16	15	14	13	12	11	10	9	8	7	6	5	4	3	2	1	0
WCNT																AFL								AEL							
R/W-0h																R/W-0h								R/W-0h							

LEGEND: R/W = Read/Write; R = Read only; W1toCl = Write 1 to clear bit; *-n* = value after reset

Table 8-17. SPI_XFERLEVEL Register Field Descriptions

Bit	Field	Type	Reset	Description
31-16	WCNT	R/W	0h	SPI word counter. This register holds the programmable value of the number of SPI words to be transferred on the channel using the FIFO buffer. When the transfer starts, a read back in this register returns the current SPI word transfer index. 0h = Counter not used 1h = One SPI word FFFEh = 65534 SPI word FFFFh = 65535 SPI word
15-8	AFL	R/W	0h	Buffer almost full. This register holds the programmable almost-full level value used to determine almost-full buffer condition. If the user wants an interrupt or a DMA read request to be issued during a receive operation when the data buffer holds at least n bytes, then the buffer SPI_XFERLEVEL[AFL] must be set with n-1. 0h = One byte 1h = 2 bytes Fh = 16 bytes
7-0	AEL	R/W	0h	Buffer almost empty. This register holds the programmable almost-empty level value used to determine almost-empty buffer condition. If the user wants an interrupt or a DMA write request to be issued during a transmit operation when the data buffer is able to receive n bytes, then the buffer SPI_XFERLEVEL[AEL] must be set with n-1. 0h = One byte 1h = 2 bytes Fh = 16 bytes

Copyright © 2017, Texas Instruments Incorporated

General-Purpose Timers

Topic Page

9.1 Overview 281
9.2 Block Diagram 281
9.3 Functional Description 282
9.4 Initialization and Configuration 289
9.5 Timer Registers 292

Copyright © 2017, Texas Instruments Incorporated

9.1 Overview

Programmable timers can be used to count or time external events that drive the timer input pins. The CC32xx general-purpose timer module (GPTM) contains 16- or 32-bit GPTM blocks. Each 16- or 32-bit GPTM block provides two 16-bit timers/counters (referred to as Timer A and Timer B) that can be configured to operate independently as timers or event counters, or concatenated to operate as one 32-bit timer. Timers can also be used to trigger µDMA transfers.

The GPTM contains four 16- or 32-bit GPTM blocks with the following functional options:

- Operating modes:
  - 16- or 32-bit programmable one-shot timer
  - 16- or 32-bit programmable periodic timer
  - 16-bit general-purpose timer with an 8-bit prescaler
  - 16-bit input-edge count- or time-capture modes with an 8-bit prescaler
  - 16-bit PWM mode with an 8-bit prescaler and software-programmable output inversion of the PWM signal
- Count up or down
- Sixteen 16- or 32-bit capture compare PWM pins (CCP)
- User-enabled stalling when the microcontroller asserts CPU Halt flag during debug
- Ability to determine the elapsed time between the assertion of the timer interrupt and entry into the interrupt service routine
- Efficient transfers using micro direct memory access controller (µDMA):
  - Dedicated channel for each timer
  - Burst request generated on timer interrupt
- Runs from system clock (80 MHz)

9.2 Block Diagram

Figure 9-1. GPTM Module Block Diagram

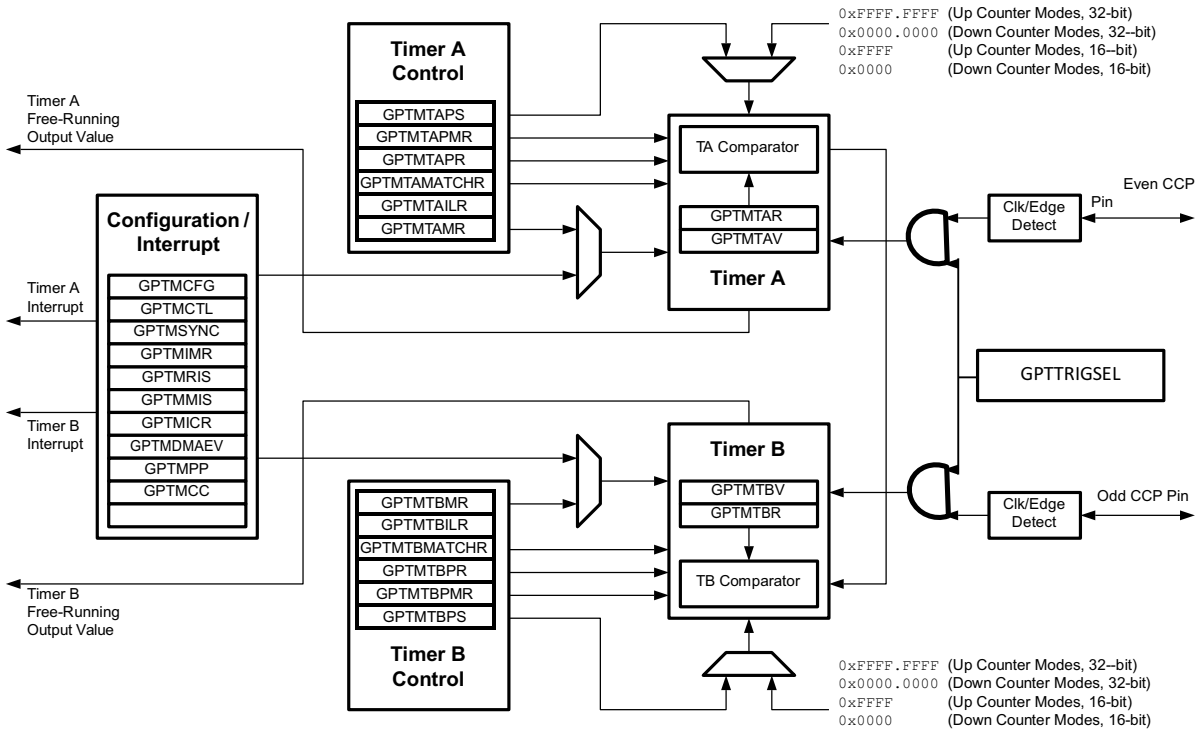

Copyright © 2017, Texas Instruments Incorporated

Table 9-1. Available CCP Pins and PWM Outputs/Signals Pins

Timer	Up/Down Counter	Even CCP Pin	Odd CCP Pin	PWM Outputs/Signals
16/32-Bit Timer 0	Timer A	GT_CCP00	-	PWM_OUT0
	Timer B	-	GT_CCP01	PWM_OUT1
16/32-Bit Timer 1	Timer A	GT_CCP02	-	PWM_OUT2
	Timer B	-	GT_CCP03	PWM_OUT3
16/32-Bit Timer 2	Timer A	GT_CCP04	-	
	Timer B	-	GT_CCP05	PWM_OUT5
16/32-Bit Timer 3	Timer A	GT_CCP06	-	PWM_OUT6
	Timer B	-	GT_CCP07	PWM_OUT7

The GP timer signals pin-muxed and CONFMODE bits in the GPIO PAD CONFIG register should be set to choose the GP timer function.

9.3 Functional Description

The main components of each GPTM block are two free-running up/down counters (referred to as Timer A and Timer B), two prescaler registers, two match registers, two prescaler match registers, two shadow registers, and two load/initialization registers and their associated control functions. The exact functionality of each GPTM is controlled by software and configured through the register interface. Timer A and Timer B can be used individually, in which case they have a 16-bit counting range for the 16/32-bit GPTM blocks. In addition, Timer A and Timer B can be concatenated to provide a 32-bit counting range for the 16/32-bit GPTM blocks.

NOTE: The prescaler can only be used when the timers are used individually.

The available modes for each GPTM block are shown in Table 9-2. Note that when counting down in one-shot or periodic modes, the prescaler acts as a true prescaler and contains the least-significant bits of the count. When counting up in one-shot or periodic modes, the prescaler acts as a timer extension, and holds the most-significant bits of the count. In input edge count, input edge time, and PWM mode, the prescaler always acts as a timer extension, regardless of the count direction.

Table 9-2. General-Purpose Timer Capabilities

Mode	Timer Use	Count Direction	Counter Size	Prescaler Size[1]
One-shot	Individual	Up or down	16-bit	8-bit
	Concatenated	Up or down	32-bit	-
Periodic	Individual	Up or down	16-bit	8-bit
	Concatenated	Up or down	32-bit	-
Edge Count	Individual	Up or down	16-bit	8-bit
Edge Time	Individual	Up or down	16-bit	8-bit
PWM	Individual	Down	16-bit	8-bit

(1) The prescaler is only available when the timers are used individually

Software configures the GPTM using the GPTM Configuration (GPTMCFG) register, the GPTM Timer A Mode (GPTMTAMR) register, and the GPTM Timer B Mode (GPTMTBMR) register. When in one of the concatenated modes, Timer A and Timer B can only operate in one mode. However, when configured in an individual mode, Timer A and Timer B can be independently configured in any combination of the individual modes.

9.3.1 GPTM Reset Conditions

After reset has been applied to the GPTM module, the module is in an inactive state, and all control registers are cleared and in their default states. Counters Timer A and Timer B are initialized to all 1s, along with their corresponding registers:

Copyright © 2017, Texas Instruments Incorporated

■ Load registers:

- GPTM Timer A Interval Load (GPTMTAILR) register
- GPTM Timer B Interval Load (GPTMTBILR) register

■ Shadow registers:

- GPTM Timer A Value (GPTMTAV) register
- GPTM Timer B Value (GPTMTBV) register

The following prescale counters are initialized to all 0s:

- GPTM Timer A Prescale (GPTMTAPR) register
- GPTM Timer B Prescale (GPTMTBPR) register
- GPTM Timer A Prescale Snapshot (GPTMTAPS) register
- GPTM Timer B Prescale Snapshot (GPTMTBPS) register

9.3.2 Timer Modes

This section describes the operation of the various timer modes. When using Timer A and Timer B in concatenated mode, only the Timer A control and status bits must be used; there is no need to use Timer B control and status bits. The GPTM is placed into individual/split mode by writing a value of 0x4 to the GPTM Configuration (GPTMCFG) register. In the following sections, the variable n is used in bit field and register names to imply either a Timer A function or a Timer B function. Throughout this section, the timeout event in down-count mode is 0x0, and in up-count mode is the value in the GPTM Timer n Interval Load (GPTMTnILR) and the optional GPTM Timer n Prescale (GPTMTnPR) registers.

9.3.2.1 One-Shot or Periodic Timer Mode

The selection of one-shot or periodic mode is determined by the value written to the TnMR field of the GPTM Timer n Mode (GPTMTnMR) register. The timer is configured to count up or down using the TnCDIR bit in the GPTMTnMR register.

When software sets the TnEN bit in the GPTM Control (GPTMCTL) register, the timer begins counting up from 0x0 or down from its preloaded value. Table 9-3 shows the values loaded into the timer registers when the timer is enabled.

Table 9-3. Counter Values When the Timer is Enabled in Periodic or One-Shot Modes

Register	Count Down Mode	Count Up Mode
GPTMTnR	GPTMTnILR	0x0
GPTMTnV	GPTMTnILR in concatenated mode; GPTMTnPR in combination with GPTMTnILR in individual mode.	0x0
GPTMTnPS	GPTMTnPR in individual mode; not available in concatenated mode.	0x0 in individual mode; not available in concatenated mode.

When the timer is counting down and it reaches the timeout event (0x0), the timer reloads its start value from the GPTMTnILR and the GPTMTnPR registers on the next cycle. When the timer is counting up and it reaches the timeout event (the value in the GPTMTnILR and the optional GPTMTnPR registers), the timer reloads with 0x0. If configured as a one-shot timer, the timer stops counting and clears the TnEN bit in the GPTMCTL register. If configured as a periodic timer, the timer starts counting again on the next cycle.

In periodic, snap-shot mode, the TnMR field is 0x2 and the TnSNAPS bit is set in the GPTMTnMR register, the value of the timer at the time-out event is loaded into the GPTMTnR register, and the value of the prescaler is loaded into the GPTMTnPS register. The free-running counter value is shown in the GPTMTnV register. In this manner, software can determine the time elapsed from the interrupt assertion to the ISR entry by examining the snapshot values and the current value of the free-running timer. Snapshot mode is not available when the timer is configured in one-shot mode.

Copyright © 2017, Texas Instruments Incorporated

In addition to reloading the count value, the GPTM can generate interrupts, CCP outputs, and triggers when it reaches the time-out event. The GPTM sets the TnTORIS bit in the GPTM Raw Interrupt Status (GPTMRIS) register, and holds it until it is cleared by writing the GPTM Interrupt Clear (GPTMICR) register. If the time-out interrupt is enabled in the GPTM Interrupt Mask (GPTMIMR) register, the GPTM also sets the TnTOMIS bit in the GPTM Masked Interrupt Status (GPTMMIS) register. The time-out interrupt can be disabled entirely by setting the TACINTD bit in the GPTM Timer n Mode (GPTMTnMR) register. In this case, the TnTORIS bit does not even set in the GPTMRIS register.

By setting the TnMIE bit in the GPTMTnMR register, an interrupt condition can also be generated when the timer value equals the value loaded into the GPTM Timer n Match (GPTMTnMATCHR) and GPTM Timer n Prescale Match (GPTMTnPMR) registers. This interrupt has the same status, masking, and clearing functions as the time-out interrupt, but uses the match interrupt bits instead (for example, the raw interrupt status is monitored using the TnMRIS bit in the GPTM Raw Interrupt Status (GPTMRIS) register). The interrupt status bits are not updated by the hardware unless the TnMIE bit in the GPTMTnMR register is set, which is different than the behavior for the time-out interrupt. The μDMA trigger is enabled by configuring and enabling the appropriate μDMA channel, as well as the type of trigger enable in the GPTM DMA Event (GPTMDMAEV) register.

If software updates the GPTMTnILR or the GPTMTnPR register while the counter is counting down, the counter loads the new value on the next clock cycle and continues counting from the new value if the TnILD bit in the GPTMTnMR register is clear. If the TnILD bit is set, the counter loads the new value after the next timeout. If software updates the GPTMTnILR or the GPTMTnPR register while the counter is counting up, the timeout event is changed on the next cycle to the new value. If software updates the GPTM Timer n Value (GPTMTnV) register while the counter is counting up or down, the counter loads the new value on the next clock cycle and continues counting from the new value. If software updates the GPTMTnMATCHR or the GPTMTnPMR registers, the new values are reflected on the next clock cycle if the TnMRSU bit in the GPTMTnMR register is clear. If the TnMRSU bit is set, the new value does not take effect until the next timeout.

If the TnSTALL bit in the GPTMCTL register is set, the timer freezes counting while the processor is halted by the debugger. The timer resumes counting when the processor resumes execution.

Table 9-4 shows a variety of configurations for a 16-bit free-running timer while using the prescaler. All values assume a 80-MHz clock with Tc=12.5 ns (clock period). The prescaler can only be used when a 16/32-bit timer is configured in 16-bit mode.

Table 9-4. 16-Bit Timer With Prescaler Configurations

Prescale (8-bit value)	Number of Timer Clocks (Tc)[1]	Max Time	Units
00000000	1	0.8192	ms
00000001	2	1.6384	ms
00000010	3	2.4576	ms
----------	--	--	--
11111101	254	208.0768	ms
11111110	255	208.896	ms
11111111	256	209.7152	ms

(1) Tc is the clock period.

9.3.2.2 Input Edge-Count Mode

NOTE: For rising-edge detection, the input signal must be High for at least two clock periods following the rising edge. Similarly, for falling-edge detection, the input signal must be Low for at least two clock periods following the falling edge. Based on this criteria, the maximum input frequency for edge detection is 1/4 of the frequency.

Copyright © 2017, Texas Instruments Incorporated

In edge-count mode, the timer is configured as a 24-bit up- or down-counter, including the optional prescaler with the upper count value stored in the GPTM Timer n Prescale (GPTMTnPR) register and the lower bits in the GPTMTnR register. In this mode, the timer is capable of capturing three types of events: rising edge, falling edge, or both. To place the timer in edge-count mode, the TnCMR bit of the GPTMTnMR register must be cleared. The type of edge that the timer counts is determined by the TnEVENT fields of the GPTMCTL register. During initialization in down-count mode, the GPTMTnMATCHR and GPTMTnPMR registers are configured so that the difference between the value in the GPTMTnILR and GPTMTnPR registers and the GPTMTnMATCHR and GPTMTnPMR registers equals the number of edge events that must be counted. In up-count mode, the timer counts from 0x0 to the value in the GPTMTnMATCHR and GPTMTnPMR registers. Note that when executing an up-count, the value of GPTMTnPR and GPTMTnILR must be greater than the value of GPTMTnPMR and GPTMTnMATCHR. Table 9-5 shows the values loaded into the timer registers when the timer is enabled.

Table 9-5. Counter Values When the Timer is Enabled in Input Edge-Count Mode

Register	Count Down Mode	Count Up Mode
GPTMTnR	GPTMTnPR in combination with GPTMTnILR	0x0
GPTMTnV	GPTMTnPR in combination with GPTMTnILR	0x0

When software writes the TnEN bit in the GPTM Control (GPTMCTL) register, the timer is enabled for event capture. Each input event on the CCP pin decrements or increments the counter by 1 until the event count matches GPTMTnMATCHR and GPTMTnPMR. When the counts match, the GPTM asserts the CnMRIS bit in the GPTM Raw Interrupt Status (GPTMRIS) register, and holds it until it is cleared by writing the GPTM Interrupt Clear (GPTMICR) register. If the capture mode match interrupt is enabled in the GPTM Interrupt Mask (GPTMIMR) register, the GPTM also sets the CnMMIS bit in the GPTM Masked Interrupt Status (GPTMMIS) register. In up-count mode, the current count of the input events is held in both the GPTMTnR and GPTMTnV registers. In down-count mode, the current count of the input events can be obtained by subtracting the GPTMTnR or GPTMTnV from the value made up of the GPTMTnPR and GPTMTnILR register combination.

The μDMA trigger is enabled by configuring and enabling the appropriate μDMA channel, as well as the type of trigger enable in the GPTM DMA Event (GPTMDMAEV) register.

After the match value is reached in down-count mode, the counter is then reloaded using the value in the GPTMTnILR and GPTMTnPR registers, and stopped because the GPTM automatically clears the TnEN bit in the GPTMCTL register. Once the event count has been reached, all further events are ignored until TnEN is re-enabled by software. In up-count mode, the timer is reloaded with 0x0 and continues counting.

Figure 9-2 shows how input edge-count mode works. In this case, the timer start value is set to GPTMTnILR =0x000A, and the match value is set to GPTMTnMATCHR =0x0006 so that four edge events are counted. The counter is configured to detect both edges of the input signal.

The last two edges are not counted, because the timer automatically clears the TnEN bit after the current count matches the value in the GPTMTnMATCHR register.

Copyright © 2017, Texas Instruments Incorporated

Figure 9-2. Input Edge-Count Mode Example, Counting Down

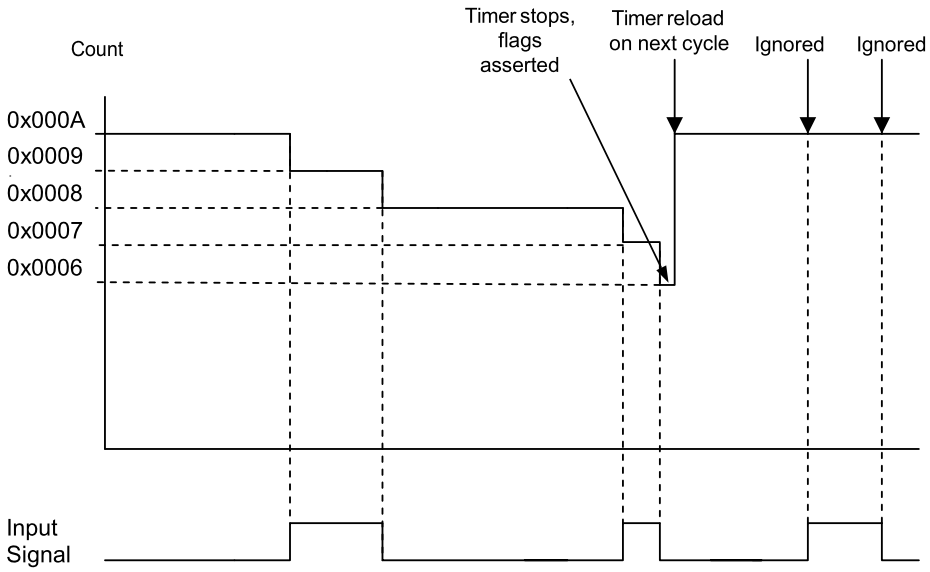

9.3.2.3 Input Edge-Time Mode

NOTE: For rising-edge detection, the input signal must be High for at least two system clock periods following the rising edge. Similarly, for falling edge detection, the input signal must be Low for at least two system clock periods following the falling edge. Based on this criteria, the maximum input frequency for edge detection is 1/4 of the system frequency.

In edge-time mode, the timer is configured as a 24-bit up- or down-counter, including the optional prescaler with the upper timer value stored in the GPTMTnPR register and the lower bits in the GPTMTnILR register. In this mode, the timer is initialized to the value loaded in the GPTMTnILR and GPTMTnPR registers when counting down, and 0x0 when counting up. The timer is capable of capturing three types of events: rising edge, falling edge, or both. The timer is placed into edge-time mode by setting the TnCMR bit in the GPTMTnMR register, and the type of event that the timer captures is determined by the TnEVENT fields of the GPTMCTL register. Table 9-6 shows the values loaded into the timer registers when the timer is enabled.

Set the TRIGSEL bits of the register GPTTRIGSEL to detect GPIO triggers.

Table 9-6. Counter Values When the Timer is Enabled in Input Edge-Time Mode

Register	Count Down Mode	Count Up Mode
TnR	GPTMTnILR	0x0
TnV	GPTMTnILR	0x0

When software writes the TnEN bit in the GPTMCTL register, the timer is enabled for event capture. When the selected input event is detected, the current timer counter value is captured in the GPTMTnR and GPTMTnPS registers, and is available to be read by the microcontroller. The GPTM then asserts the CnERIS bit in the GPTM Raw Interrupt Status (GPTMRIS) register, and holds it until it is cleared by writing the GPTM Interrupt Clear (GPTMICR) register. If the capture mode event interrupt is enabled in the GPTM Interrupt Mask (GPTMIMR) register, the GPTM also sets the CnEMIS bit in the GPTM Masked Interrupt Status (GPTMMIS) register. In this mode, the GPTMTnR and GPTMTnPS registers hold the time at which the selected input event occurred, while the GPTMTnV register holds the free-running timer value. These registers can be read to determine the time that elapsed between the interrupt assertion and the entry into the ISR.

Copyright © 2017, Texas Instruments Incorporated

In addition to generating interrupts, a μDMA trigger can be generated. The μDMA trigger is enabled by configuring the appropriate μDMA channel, as well as the type of trigger selected in the GPTM DMA Event (GPTMDMAEV) register.

After an event has been captured, the timer does not stop counting. It continues to count until the TnEN bit is cleared. When the timer reaches the timeout value, it is reloaded with 0x0 in up-count mode, and the value from the GPTMTnILR and GPTMTnPR registers in down-count mode.

Figure 9-3 shows how input edge-timing mode works. In the diagram, the start value of the timer is the default value of 0xFFFF, and the timer is configured to capture rising-edge events.

Each time a rising edge event is detected, the current count value is loaded into the GPTMTnR and GPTMTnPS registers, and is held there until another rising-edge is detected (at which point the new count value is loaded into the GPTMTnR and GPTMTnPS registers).

Figure 9-3. 16-Bit Input Edge-Time Mode Example

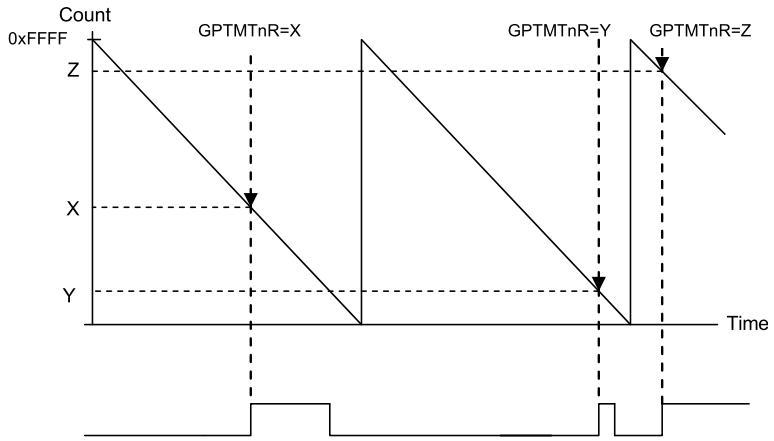

When operating in edge-time mode, the counter uses a modulo 2^{24} count if prescaler is enabled, or 216 if not. If there is a possibility the edge could take longer than the count, then another timer configured in periodic-timer mode can be implemented to ensure detection of the missed edge. The periodic timer should be configured in such a way that:

- The periodic timer cycles at the same rate as the edge-time timer.
- The periodic timer interrupt has a higher interrupt priority than the edge-time timeout interrupt.
- If the periodic timer interrupt service routine is entered, software must check if an edge-time interrupt is pending and if it is, the value of the counter must be subtracted by 1 before being used to calculate the snapshot time of the event.

9.3.2.4 PWM Mode

The GPTM supports a simple PWM generation mode. In PWM mode, the timer is configured as a 24-bit down-counter with a start value (and thus period) defined by the GPTMTnILR and GPTMTnPR registers. In this mode, the PWM frequency and period are synchronous events, and therefore guaranteed to be glitch-free. PWM mode is enabled in the GPTMTnMR register by setting the TnAMS bit to 0x1, the TnCMR bit to 0x0, and the TnMR field to 0x2. Table 9-7 shows the values loaded into the timer registers when the timer is enabled.

Table 9-7. Counter Values When the Timer is Enabled in PWM Mode

Register	Count Down Mode	Count Up Mode
GPTMTnR	GPTMTnILR	Not available
GPTMTnV	GPTMTnILR	Not available

Copyright © 2017, Texas Instruments Incorporated

When software writes the TnEN bit in the GPTMCTL register, the counter begins counting down until it reaches the 0x0 state. On the next counter cycle in periodic mode, the counter reloads its start value from the GPTMTnILR and GPTMTnPR registers, and continues counting until disabled by software clearing the TnEN bit in the GPTMCTL register. The timer is capable of generating interrupts based on three types of events: rising edge, falling edge, or both. The event is configured by the TnEVENT field of the GPTMCTL register, and the interrupt is enabled by setting the TnPWMIE bit in the GPTMTnMR register. When the event occurs, the CnERIS bit is set in the GPTM Raw Interrupt Status (GPTMRIS) register, and holds it until it is cleared by writing the GPTM Interrupt Clear (GPTMICR) register. If the capture mode event interrupt is enabled in the GPTM Interrupt Mask (GPTMIMR) register, the GPTM also sets the CnEMIS bit in the GPTM Masked Interrupt Status (GPTMMIS) register. Note that the interrupt status bits are not updated unless the TnPWMIE bit is set.

In addition, when the TnPWMIE bit is set and a capture event occurs, the timer automatically generates triggers to the DMA if the trigger capability is enabled, by setting the TnOTE bit in the GPTMCTL register and the CnEDMAEN bit in the GPTMDMAEV register, respectively.

In this mode, the GPTMTnR and GPTMTnV registers always have the same value.

The output PWM signal asserts when the counter is at the value of the GPTMTnILR and GPTMTnPR registers (its start state), and is deasserted when the counter value equals the value in the GPTMTnMATCHR and GPTMTnPMR registers. Software can invert the output PWM signal by setting the TnPWML bit in the GPTMCTL register.

NOTE: If PWM output inversion is enabled, edge-detection interrupt behavior is reversed. Thus, if a positive-edge interrupt trigger has been set and the PWM inversion generates a positive edge, no event-trigger interrupt asserts. Instead, the interrupt is generated on the negative edge of the PWM signal.

Figure 9-4 shows how to generate an output PWM with a 1-ms period and a 66% duty cycle assuming a 50-MHz input clock and TnPWML =0 (duty cycle would be 33% for the TnPWML =1 configuration). For this example, the start value is GPTMTnILR=0xC350, and the match value is GPTMTnMATCHR=0x411A.

Figure 9-4. 16-Bit PWM Mode Example

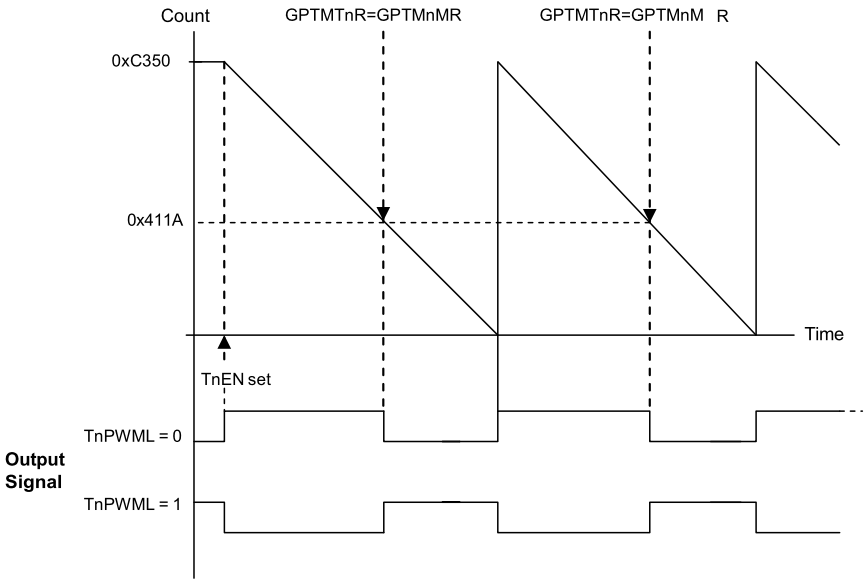

Copyright © 2017, Texas Instruments Incorporated

9.3.3 DMA Operation

The timers each have a dedicated µDMA channel and can provide a request signal to the µDMA controller. Pulse requests are generated by a timer using its own dma_req signal. A dma_done signal is provided from the µDMA to each timer, to indicate transfer completion and trigger a µDMA done interrupt (DMAnRIS) in the GPTM Raw Interrupt Status Register (GPTMRIS) register. The request is a burst type, and occurs whenever a timer raw interrupt condition occurs. The arbitration size of the µDMA transfer should be set to the amount of data that should be transferred whenever a timer event occurs.

For example, to transfer 256 items, or 8 items at a time every 10 ms, configure a timer to generate a periodic timeout at 10 ms. Configure the µDMA transfer for a total of 256 items, with a burst size of 8 items. Each time the timer times out, the µDMA controller transfers 8 items, until all 256 items have been transferred.

The GPTM DMA Event (GPTMDMAEV) register enables the types of events that can cause a dma_req signal assertion by the timer module. Application software can enable a dma_req trigger for a match, capture, or time-out event for each timer using the GPTMDMAEV register. For an individual timer, all active timer trigger events that have been enabled through the GPTMDMAEV register are ORed together to create a single dma_req pulse that is sent to the µDMA. When the µDMA transfer has completed, a dma_done signal is sent to the timer, resulting in a DMAnRIS bit set in the GPTMRIS register.

9.3.4 Accessing Concatenated 16/32-Bit GPTM Register Values

The GPTM is placed into concatenated mode by writing a 0x0 to the GPTMCFG bit field in the GPTM Configuration (GPTMCFG) register. In this configuration, certain 16/32-bit GPTM registers are concatenated to form pseudo-32-bit registers. These registers include:

- GPTM Timer A Interval Load (GPTMTAILR) register [15:0]
- GPTM Timer B Interval Load (GPTMTBILR) register [15:0]
- GPTM Timer A (GPTMTAR) register [15:0]
- GPTM Timer B (GPTMTBR) register [15:0]
- GPTM Timer A Value (GPTMTAV) register [15:0]
- GPTM Timer B Value (GPTMTBV) register [15:0]
- GPTM Timer A Match (GPTMTAMATCHR) register [15:0]
- GPTM Timer B Match (GPTMTBMATCHR) register [15:0]

In the 32-bit modes, the GPTM translates a 32-bit write access to GPTMTAILR into a write access to both GPTMTAILR and GPTMTBILR. The resulting word ordering for such a write operation is:

```
GPTMTBILR[15:0]:GPTMTAILR[15:0]
```

Likewise, a 32-bit read access to GPTMTAR returns the value:

```
GPTMTBR[15:0]:GPTMTAR[15:0]
```

A 32-bit read access to GPTMTAV returns the value:

```
GPTMTBV[15:0]:GPTMTAV[15:0]
```

9.4 Initialization and Configuration

To use a GPTM, the appropriate CLKEN bit must be set in the GPTnCLKCFG or GPTnCLKEN register. Configure the CONFMODE fields in the GPIO_PAD_CONFIG register to assign the CCP signals to the appropriate pins. The user should set GPTTRIGSEL bits appropriately before using CCP mode.

The user can also reset GPTM blocks using register GPTnSWRST.

This section shows module initialization and configuration examples for each of the supported timer modes.

Copyright © 2017, Texas Instruments Incorporated

9.4.1 One-Shot and Periodic Timer Mode

The GPTM is configured for one-shot and periodic modes by the following sequence:

1. Ensure the timer is disabled (the TnEN bit in the GPTMCTL register is cleared) before making any changes.
2. Write the GPTM Configuration Register (GPTMCFG) with a value of 0x0000.0000.
3. Configure the TnMR field in the GPTM Timer n Mode Register (GPTMTnMR):

   (a) Write a value of 0x1 for one-shot mode.

   (b) Write a value of 0x2 for periodic mode.
4. Optionally configure the TnSNAPS, TnWOT, TnMTE, and TnCDIR bits in the GPTMTnMR register to select whether to capture the value of the free-running timer at time-out, use an external trigger to start counting, configure an additional trigger or interrupt, and count up or down.
5. Load the start value into the GPTM Timer n Interval Load (GPTMTnILR) register.
6. If interrupts are required, set the appropriate bits in the GPTM Interrupt Mask (GPTMIMR) register.
7. Set the TnEN bit in the GPTMCTL register to enable the timer and start counting.
8. Poll the GPTMRIS register or wait for the interrupt to be generated (if enabled). In both cases, the status flags are cleared by writing a 1 to the appropriate bit of the GPTM Interrupt Clear (GPTMICR) register.

If the TnMIE bit in the GPTMTnMR register is set, the RTCRIS bit in the GPTMRIS register is set, and the timer continues counting. In one-shot mode, the timer stops counting after the time-out event. To re-enable the timer, repeat the sequence. A timer configured in periodic mode reloads the timer and continues counting after the time-out event.

9.4.2 Input Edge-Count Mode

Configure the timer to input edge-count mode with the following sequence:

1. Ensure the timer is disabled (the TnEN bit is cleared) before making any changes.
2. Write the GPTM Configuration (GPTMCFG) register with a value of 0x0000.0004.
3. In the GPTM Timer Mode (GPTMTnMR) register, write the TnCMR field to 0x0 and the TnMR field to 0x3.
4. Configure the type of events that the timer captures by writing the TnEVENT field of the GPTM Control (GPTMCTL) register.
5. Program registers according to count direction:
   - In down-count mode, the GPTMTnMATCHR and GPTMTnPMR registers are configured so that the difference between the value in the GPTMTnILR and GPTMTnPR registers and the GPTMTnMATCHR and GPTMTnPMR registers equals the number of edge events that must be counted.
   - In up-count mode, the timer counts from 0x0 to the value in the GPTMTnMATCHR and GPTMTnPMR registers. Note that when executing an up-count, the value of GPTMTnPR and GPTMTnILR must be greater than the value of GPTMTnPMR and GPTMTnMATCHR.
6. If interrupts are required, set the CnMIM bit in the GPTM Interrupt Mask (GPTMIMR) register.
7. Set the TnEN bit in the GPTMCTL register to enable the timer and begin waiting for edge events.
8. Poll the CnMRIS bit in the GPTMRIS register or wait for the interrupt to be generated (if enabled). In both cases, the status flags are cleared by writing a 1 to the CnMCINT bit of the GPTM Interrupt Clear (GPTMICR) register.

When counting down in input edge-count mode, the timer stops after the programmed number of edge events has been detected. To re-enable the timer, ensure that the TnEN bit is cleared, and repeat steps #4 through #8.

Copyright © 2017, Texas Instruments Incorporated

9.4.3 Input Edge-Time Mode

Configure the timer to input edge-time mode with the following sequence:

1. Ensure the timer is disabled (the TnEN bit is cleared) before making any changes.
2. Write the GPTM Configuration (GPTMCFG) register with a value of 0x0000.0004.
3. In the GPTM Timer Mode (GPTMTnMR) register, write the TnCMR field to 0x1 and the TnMR field to 0x3, and select a count direction by programming the TnCDIR bit.
4. Configure the type of event that the timer captures by writing the TnEVENT field of the GPTM Control (GPTMCTL) register.
5. If using a prescaler, write the prescale value to the GPTM Timer n Prescale (GPTMTnPR) register.
6. Load the timer start value into the GPTM Timer n Interval Load (GPTMTnILR) register.
7. If interrupts are required, set the CnEIM bit in the GPTM Interrupt Mask (GPTMIMR) register.
8. Set the TnEN bit in the GPTM Control (GPTMCTL) register to enable the timer and start counting.
9. Poll the CnERIS bit in the GPTMRIS register, or wait for the interrupt to be generated (if enabled). In both cases, the status flags are cleared by writing a 1 to the CnECINT bit of the GPTM Interrupt Clear (GPTMICR) register. The time at which the event happened can be obtained by reading the GPTM Timer n (GPTMTnR) register.

In input edge timing mode, the timer continues running after an edge event has been detected, but the timer interval can be changed at any time by writing the GPTMTnILR register and clearing the TnILD bit in the GPTMTnMR register. The change takes effect at the next cycle after the write.

9.4.4 PWM Mode

Configure the timer to PWM mode with the following sequence:

1. Ensure the timer is disabled (the TnEN bit is cleared) before making any changes.
2. Write the GPTM Configuration (GPTMCFG) register with a value of 0x0000.0004.
3. In the GPTM Timer Mode (GPTMTnMR) register, set the TnAMS bit to 0x1, the TnCMR bit to 0x0, and the TnMR field to 0x2.
4. Configure the output state of the PWM signal (whether or not it is inverted) in the TnPWML field of the GPTM Control (GPTMCTL) register.
5. If using a prescaler, write the prescale value to the GPTM Timer n Prescale (GPTMTnPR) register.
6. If using PWM interrupts, configure the interrupt condition in the TnEVENT field in the GPTMCTL register, and enable the interrupts by setting the TnPWMIE bit in the GPTMTnMR register. Edge-detect interrupt behavior is reversed when the PWM output is inverted.
7. Load the timer start value into the GPTM Timer n Interval Load (GPTMTnILR) register.
8. Load the GPTM Timer n Match (GPTMTnMATCHR) register with the match value.
9. Set the TnEN bit in the GPTM Control (GPTMCTL) register to enable the timer and begin generation of the output PWM signal.

Copyright © 2017, Texas Instruments Incorporated

9.5 Timer Registers

Table 9-8 lists the memory-mapped Tiemr registers. All register offset addresses not listed in Table 9-8 should be considered as reserved locations, and the register contents should not be modified.

Table 9-8. Timer Registers

Offset	Acronym	Register Name	Section
0h	GPTMCFG	GPTM Configuration	Section 9.5.1
4h	GPTMTAMR	GPTM Timer A Mode	Section 9.5.2
8h	GPTMTBMR	GPTM Timer B Mode	Section 9.5.3
Ch	GPTMCTL	GPTM Control	Section 9.5.4
18h	GPTMIMR	GPTM Interrupt Mask	Section 9.5.5
1Ch	GPTMRIS	GPTM Raw Interrupt Status	Section 9.5.6
20h	GPTMMIS	GPTM Masked Interrupt Status	Section 9.5.7
24h	GPTMICR	GPTM Interrupt Clear	Section 9.5.8
28h	GPTMTAILR	GPTM Timer A Interval Load	Section 9.5.9
2Ch	GPTMTBILR	GPTM Timer B Interval Load	Section 9.5.10
30h	GPTMTAMATCHR	GPTM Timer A Match	Section 9.5.11
34h	GPTMTBMATCHR	GPTM Timer B Match	Section 9.5.12
38h	GPTMTAPR	GPTM Timer A Prescale	Section 9.5.13
3Ch	GPTMTBPR	GPTM Timer B Prescale	Section 9.5.14
40h	GPTMTAPMR	GPTM TimerA Prescale Match	Section 9.5.15
44h	GPTMTBPMR	GPTM TimerB Prescale Match	Section 9.5.16
48h	GPTMTAR	GPTM Timer A	Section 9.5.17
4Ch	GPTMTBR	GPTM Timer B	Section 9.5.18
50h	GPTMTAV	GPTM Timer A Value	Section 9.5.19
54h	GPTMTBV	GPTM Timer B Value	Section 9.5.20
6Ch	GPTMDMAEV	GPTM DMA Event	Section 9.5.21

Copyright © 2017, Texas Instruments Incorporated

9.5.1 GPTMCFG Register (offset = 0h) [reset = 0h]

GPTMCFG is shown in Figure 9-5 and described in Table 9-9.

This register configures the global operation of the GPTM module. The value written to this register determines whether the GPTM is in 32- or 16-bit mode.

NOTE: Bits in this register should only be changed when the TAEN and TBEN bits in the GPTMCTL register are cleared.

Figure 9-5. GPTMCFG Register

31	30	29	28	27	26	25	24	23	22	21	20	19	18	17	16
RESERVED															
R-0h															
15	14	13	12	11	10	9	8	7	6	5	4	3	2	1	0
RESERVED													GPTMCFG		
R-0h													R/W-0h		

Table 9-9. GPTMCFG Register Field Descriptions

Bit	Field	Type	Reset	Description
31-3	RESERVED	R	0h	
2-0	GPTMCFG	R/W	0h	GPTM Configuration The GPTMCFG values are defined as follows: 0h = For a 16/32-bit timer, this value selects the 32-bit timer configuration. 1h-3h = Reserved 4h = For a 16/32-bit timer, this value selects the 16-bit timer configuration. The function is controlled by bits 1:0 of GPTMTAMR and GPTMTBMR. 5h - 7h = Reserved

Copyright © 2017, Texas Instruments Incorporated

9.5.2 GPTMTAMR Register (offset = 4h) [reset = 0h]

GPTMTAMR is shown in Figure 9-6 and described in Table 9-10.

This register configures the GPTM, based on the configuration selected in the GPTMCFG register. When in PWM mode, set the TAAMS bit, clear the TACMR bit, and configure the TAMR field to 0x1 or 0x2.

Figure 9-6. GPTMTAMR Register

31	30	29	28	27	26	25	24
RESERVED							
R-0h							
23	22	21	20	19	18	17	16
RESERVED							
R-0h							
15	14	13	12	11	10	9	8
RESERVED				TAPLO	TAMRSU	TAPWMIE	TAILD
R-0h				R/W-0h	R/W-0h	R/W-0h	R/W-0h
7	6	5	4	3	2	1	0
RESERVED		TAMIE	TACDIR	TAAMS	TACMIR	TAMR	
R-0h		R/W-0h	R/W-0h	R/W-0h	R/W-0h	R/W-0h	

Table 9-10. GPTMTAMR Register Field Descriptions

Bit	Field	Type	Reset	Description
31-12	RESERVED	R	0h	
11	TAPLO	R/W	0h	GPTM Timer A PWM Legacy Operation 0h = Legacy operation with CCP pin driven Low when the GPTMTAILR is reloaded after the timer reaches 0. 1h = CCP is driven High when the GPTMTAILR is reloaded after the timer reaches 0.
10	TAMRSU	R/W	0h	GPTM Timer A Match Register Update. If the timer is disabled (TAEN is clear) when this bit is set, GPTMTAMATCHR and GPTMTAPR are updated when the timer is enabled. If the timer is stalled (TASTALL is set), GPTMTAMATCHR and GPTMTAPR are updated according to the configuration of this bit. 0h = Update the GPTMTAMATCHR register and the GPTMTAPR register, if used, on the next cycle. 1h = Update the GPTMTAMATCHR register and the GPTMTAPR register, if used, on the next timeout.
9	TAPWMIE	R/W	0h	GPTM Timer A PWM Interrupt Enable. This bit enables interrupts in PWM mode on rising, falling, or both edges of the CCP output, as defined by the TAEVENT field in the GPTMCTL register. In addition, when this bit is set and a capture event occurs, Timer A automatically generates triggers to the DMA if the trigger capability is enabled, by setting the TAOTE bit in the GPTMCTL register and the CAEDMAEN bit in the GPTMDMAEV register, respectively. This bit is only valid in PWM mode. 0h = Capture event interrupt is disabled. 1h = Capture event interrupt is enabled.

Copyright © 2017, Texas Instruments Incorporated

Table 9-10. GPTMTAMR Register Field Descriptions (continued)

Bit	Field	Type	Reset	Description
8	TAILD	R/W	0h	GPTM Timer A Interval Load Write. Note the state of this bit has no effect when counting up. The bit descriptions above apply if the timer is enabled and running. If the timer is disabled (TAEN is clear) when this bit is set, GPTMTAR, GPTMTAV, and GPTMTAPs are updated when the timer is enabled. If the timer is stalled (TASTALL is set), GPTMTAR and GPTMTAPS are updated according to the configuration of this bit. 0h = Updates the GPTMTAR and GPTMTAV registers with the value in the GPTMTAILR register on the next cycle. Also updates the GPTMTAPS register with the value in the GPTMTAPR register on the next cycle. 1h = Updates the GPTMTAR and GPTMTAV registers with the value in the GPTMTAILR register on the next timeout. Also updates the GPTMTAPS register with the value in the GPTMTAPR register on the next timeout.
7-6	RESERVED	R	0h	
5	TAMIE	R/W	0h	GPTM Timer A Match Interrupt Enable 0h = The match interrupt is disabled for match events. Additionally, triggers to the DMA on match events are prevented. 1h = An interrupt is generated when the match value in the GPTMTAMATCHR register is reached in the one-shot and periodic modes.
4	TACDIR	R/W	0h	GPTM Timer A Count Direction. When in PWM mode, the status of this bit is ignored. PWM mode always counts down. 0h = The timer counts down. 1h = The timer counts up. When counting up, the timer starts from a value of 0x0.
3	TAAMS	R/W	0h	GPTM Timer A Alternate Mode Select. The TAAMS values are defined as follows. Note: To enable PWM mode, clear the TACMR bit and configure the TAMR field to 0x1 or 0x2. 0h = Capture or compare mode is enabled. 1h = PWM mode is enabled.
2	TACMIR	R/W	0h	GPTM Timer A Capture Mode. The TACMR values are defined as follows: 0h = Edge-count mode 1h = Edge-time mode
1-0	TAMR	R/W	0h	GPTM Timer A Mode. The TAMR values are defined as follows: The timer mode is based on the timer configuration defined by bits 2:0 in the GPTMCFG register. 0h = Reserved 1h = One-shot timer mode 2h = Periodic timer mode 3h = Capture mode

Copyright © 2017, Texas Instruments Incorporated

9.5.3 GPTMTBMR Register (offset = 8h) [reset = 0h]

GPTMTBMR is shown in Figure 9-7 and described in Table 9-11.

This register controls the modes for Timer B when it is used individually. When Timer A and Timer B are concatenated, this register is ignored and GPTMTAMR controls the modes for both Timer A and Timer B.

Figure 9-7. GPTMTBMR Register

31	30	29	28	27	26	25	24
RESERVED							
R-0h							
23	22	21	20	19	18	17	16
RESERVED							
R-0h							
15	14	13	12	11	10	9	8
RESERVED				TBPLO	TBMRSU	TBPWMIE	TBILD
R-0h				R/W-0h	R/W-0h	R/W-0h	R/W-0h
7	6	5	4	3	2	1	0
RESERVED		TBMIE	TBCDIR	TBAMS	TBCMR	TBMR	
R-0h		R/W-0h	R/W-0h	R/W-0h	R/W-0h	R/W-0h	

Table 9-11. GPTMTBMR Register Field Descriptions

Bit	Field	Type	Reset	Description
31-12	RESERVED	R	0h	
11	TBPLO	R/W	0h	Timer B PWM Legacy Operation. This bit is only valid in PWM mode. 0h = Legacy operation with CCP pin driven Low when the GPTMTAILR is reloaded after the timer reaches 0. 1h = CCP is driven High when the GPTMTAILR is reloaded after the timer reaches 0.
10	TBMRSU	R/W	0h	GPTM Timer B Match Register Update. If the timer is disabled (TBEN is clear) when this bit is set, GPTMTBMATCHR and GPTMTBPR are updated when the timer is enabled. If the timer is stalled (TBSTALL is set), GPTMTBMATCHR and GPTMTBPR are updated according to the configuration of this bit. 0h = Update the GPTMTBMATCHR register and the GPTMTBPR register, if used, on the next cycle. 1h = Update the GPTMTBMATCHR register and the GPTMTBPR register, if used, on the next timeout.
9	TBPWMIE	R/W	0h	GPTM Timer B PWM Interrupt Enable. This bit enables interrupts in PWM mode on rising, falling, or both edges of the CCP output as defined by the TBEVENT field in the GPTMCTL register. In addition, when this bit is set and a capture event occurs, Timer B automatically generates triggers to the ADC and DMA if the trigger capability is enabled, by setting the TBOTE bit in the GPTMCTL register and the CBEDMAEN bit in the GPTMDMAEV register, respectively. This bit is only valid in PWM mode. 0h = Capture event interrupt is disabled. 1h = Capture event is enabled.

Copyright © 2017, Texas Instruments Incorporated

Table 9-11. GPTMTBMR Register Field Descriptions (continued)

Bit	Field	Type	Reset	Description
8	TBILD	R/W	0h	GPTM Timer B Interval Load Write. The state of this bit has no effect when counting up. The bit descriptions above apply if the timer is enabled and running. If the timer is disabled (TBEN is clear) when this bit is set, GPTMTBR, GPTMTBV, and GPTMTBPS are updated when the timer is enabled. If the timer is stalled (TBSTALL is set), GPTMTBR and GPTMTBPS are updated according to the configuration of this bit. 0h = Update the GPTMTBR and GPTMTBV registers with the value in the GPTMTBILR register on the next cycle. Also update the GPTMTBPS register with the value in the GPTMTBPR register on the next cycle. 1h = Update the GPTMTBR and GPTMTBV registers with the value in the GPTMTBILR register on the next timeout. Also update the GPTMTBPS register with the value in the GPTMTBPR register on the next timeout.
7-6	RESERVED	R	0h	
5	TBMIE	R/W	0h	GPTM Timer B Match Interrupt Enable 0h = The match interrupt is disabled for match events. Additionally, triggers to the DMA on match events are prevented. 1h = An interrupt is generated when the match value in the GPTMTBMATCHR register is reached in the one-shot and periodic modes.
4	TBCDIR	R/W	0h	GPTM Timer B Count Direction 0h = The timer counts down. 1h = The timer counts up. When counting up, the timer starts from a value of 0x0. When in PWM mode, the status of this bit is ignored. PWM mode always counts down.
3	TBAMS	R/W	0h	GPTM Timer B Alternate Mode Select. The TBAMS values are defined as follows. To enable PWM mode, clear the TBCMR bit and configure the TBMR field to 0x1 or 0x2. 0h = Capture or compare mode is enabled. 1h = PWM mode is enabled.
2	TBCMR	R/W	0h	GPTM Timer B Capture Mode. The TBCMR values are defined as follows: 0h = Edge-count mode 1h = Edge-time mode
1-0	TBMR	R/W	0h	GPTM Timer B Mode. The TBMR values are defined as follows. The timer mode is based on the timer configuration defined by bits 2:0 in the GPTMCFG register. 0h = Reserved 1h = One-shot timer mode 2h = Periodic timer mode 3h = Capture mode

Copyright © 2017, Texas Instruments Incorporated

9.5.4 GPTMCTL Register (offset = Ch) [reset = 0h]

GPTMCTL is shown in Figure 9-8 and described in Table 9-12.

Figure 9-8. GPTMCTL Register

31	30	29	28	27	26	25	24
RESERVED							
R-0h							
23	22	21	20	19	18	17	16
RESERVED							
R-0h							
15	14	13	12	11	10	9	8
RESERVED	TBPWML	RESERVED		TBEVENT		TBSTALL	TBEN
R-0h	R/W-0h	R-0h		R/W-0h		R/W-0h	R/W-0h
7	6	5	4	3	2	1	0
RESERVED	TAPWML	RESERVED		TAEVENT		TASTALL	TAEN
R-0h	R/W-0h	R-0h		R/W-0h		R/W-0h	R/W-0h

Table 9-12. GPTMCTL Register Field Descriptions

Bit	Field	Type	Reset	Description
31-15	RESERVED	R	0h	
14	TBPWML	R/W	0h	GPTM Timer B PWM Output Level. The TBPWML values are defined as follows: 0h = Output is unaffected. 1h = Output is inverted.
13-12	RESERVED	R	0h	
11-10	TBEVENT	R/W	0h	GPTM Timer B Event Mode. The TBEVENT values are defined as follows. Note: If PWM output inversion is enabled, edge-detection interrupt behavior is reversed. Thus, if a positive-edge interrupt trigger has been set and the PWM inversion generates a positive edge, no event-trigger interrupt asserts. Instead, the interrupt is generated on the negative edge of the PWM signal. 0h = Positive edge 1h = Negative edge 2h = Reserved 3h = Both edges
9	TBSTALL	R/W	0h	GPTM Timer B Stall Enable. The TBSTALL values are defined as follows. If the processor is executing normally, the TBSTALL bit is ignored. 0h = Timer B continues counting while the processor is halted by the debugger. 1h = Timer B freezes counting while the processor is halted by the debugger.
8	TBEN	R/W	0h	GPTM Timer B Enable. The TBEN values are defined as follows: 0h = Timer B is disabled. 1h = Timer B is enabled and begins counting or the capture logic is enabled based on the GPTMCFG register.
7	RESERVED	R	0h	
6	TAPWML	R/W	0h	GPTM Timer A PWM Output Level. The TAPWML values are defined as follows: 0h = Output is unaffected. 1h = Output is inverted.
5-4	RESERVED	R	0h	

Copyright © 2017, Texas Instruments Incorporated

Table 9-12. GPTMCTL Register Field Descriptions (continued)

Bit	Field	Type	Reset	Description
3-2	TAEVENT	R/W	0h	GPTM Timer A Event Mode. The TAEVENT values are defined as follows. If PWM output inversion is enabled, edge-detection interrupt behavior is reversed. Thus, if a positive-edge interrupt trigger has been set and the PWM inversion generates a positive edge, no event-trigger interrupt asserts. Instead, the interrupt is generated on the negative edge of the PWM signal. 0h = Positive edge 1h = Negative edge 2h = Reserved 3h = Both edges
1	TASTALL	R/W	0h	GPTM Timer A Stall Enable. The TASTALL values are defined as follows. If the processor is executing normally, the TASTALL bit is ignored. 0h = Timer A continues counting while the processor is halted by the debugger. 1h = Timer A freezes counting while the processor is halted by the debugger.
0	TAEN	R/W	0h	GPTM Timer A Enable. The TAEN values are defined as follows: 0h = Timer A is disabled. 1h = Timer A is enabled and begins counting or the capture logic is enabled based on the GPTMCFG register.

Copyright © 2017, Texas Instruments Incorporated

9.5.5 GPTMIMR Register (offset = 18h) [reset = 0h]

Register mask: 0h

GPTMIMR is shown in Figure 9-9 and described in Table 9-13.

This register allows software to enable or disable GPTM controller-level interrupts. Setting a bit enables the corresponding interrupt, while clearing a bit disables it.

Figure 9-9. GPTMIMR Register

31	30	29	28	27	26	25	24
RESERVED							
R-X							
23	22	21	20	19	18	17	16
RESERVED							
R-X							
15	14	13	12	11	10	9	8
RESERVED		DMABIM	RESERVED	TBMIM	CBEIM	CBMIM	TBTOIM
R-X		R/W-X	R-X	R/W-X	R/W-X	R/W-X	R/W-X
7	6	5	4	3	2	1	0
RESERVED		DMAAIM	TAMIM	RESERVED	CAEIM	CAMIM	TATOIM
R-X		R/W-X	R/W-X	R-X	R/W-X	R/W-X	R/W-X

Table 9-13. GPTMIMR Register Field Descriptions

Bit	Field	Type	Reset	Description
31-14	RESERVED	R	X	
13	DMABIM	R/W	X	GPTM Timer B DMA Done Interrupt Mask. The DMABIM values are defined as follows: 0h = Interrupt is disabled. 1h = Interrupt is enabled.
12	RESERVED	R	X	
11	TBMIM	R/W	X	GPTM Timer B Match Interrupt Mask. The TBMIM values are defined as follows: 0h = Interrupt is disabled. 1h = Interrupt is enabled.
10	CBEIM	R/W	X	GPTM Timer B Capture Mode Event Interrupt Mask. The CBEIM values are defined as follows: 0h = Interrupt is disabled. 1h = Interrupt is enabled.
9	CBMIM	R/W	X	GPTM Timer B Capture Mode Match Interrupt Mask. The CBMIM values are defined as follows: 0h = Interrupt is disabled. 1h = Interrupt is enabled.
8	TBTOIM	R/W	X	GPTM Timer B Time-Out Interrupt Mask. The TBTOIM values are defined as follows: 0h = Interrupt is disabled. 1h = Interrupt is enabled.
7-6	RESERVED	R	X	
5	DMAAIM	R/W	X	GPTM Timer A DMA Done Interrupt Mask. The DMAAIM values are defined as follows: 0h = Interrupt is disabled. 1h = Interrupt is enabled.

Copyright © 2017, Texas Instruments Incorporated

Table 9-13. GPTMIMR Register Field Descriptions (continued)

Bit	Field	Type	Reset	Description
4	TAMIM	R/W	X	GPTM Timer A Match Interrupt Mask. The TAMIM values are defined as follows: 0h = Interrupt is disabled. 1h = Interrupt is enabled.
3	RESERVED	R	X	
2	CAEIM	R/W	X	GPTM Timer A Capture Mode Event Interrupt Mask. The CAEIM values are defined as follows: 0h = Interrupt is disabled. 1h = Interrupt is enabled.
1	CAMIM	R/W	X	GPTM Timer A Capture Mode Match Interrupt Mask. The CAMIM values are defined as follows: 0h = Interrupt is disabled. 1h = Interrupt is enabled.
0	TATOIM	R/W	X	GPTM Timer A Time-Out Interrupt Mask. The TATOIM values are defined as follows: 0h = Interrupt is disabled. 1h = Interrupt is enabled.

Copyright © 2017, Texas Instruments Incorporated

9.5.6 GPTMRIS Register (offset = 1Ch) [reset = 0h]

Register mask: 0h

GPTMRIS is shown in Figure 9-10 and described in Table 9-14.

Figure 9-10. GPTMRIS Register

31	30	29	28	27	26	25	24
RESERVED							
R-X							
23	22	21	20	19	18	17	16
RESERVED							
R-X							
15	14	13	12	11	10	9	8
RESERVED		DMABRIS	RESERVED	TBMRIS	CBERIS	CBMRIS	TBTORIS
R-X		R-X	R-X	R-X	R-X	R-X	R-X
7	6	5	4	3	2	1	0
RESERVED		DMAARIS	TAMRIS	RESERVED	CAERIS	CAMRIS	TATORIS
R-X		R-X	R-X	R-X	R-X	R-X	R-X

Table 9-14. GPTMRIS Register Field Descriptions

Bit	Field	Type	Reset	Description
31-14	RESERVED	R	X	
13	DMABRIS	R	X	GPTM Timer B DMA Done Raw Interrupt Status 0h = The Timer B DMA transfer has not completed. 1h = The Timer B DMA transfer has completed.
12	RESERVED	R	X	
11	TBMRIS	R	X	GPTM Timer B Match Raw Interrupt. This bit is cleared by writing a 1 to the TBMCINT bit in the GPTMICR register. 0h = The match value has not been reached. 1h = The TBMIE bit is set in the GPTMTBMR register, and the match values in the GPTMTBMATCHR and (optionally) GPTMTBPMR registers have been reached when configured in one-shot or periodic mode.
10	CBERIS	R	X	GPTM Timer B Capture Mode Event Raw Interrupt. This bit is cleared by writing a 1 to the CBECINT bit in the GPTMICR register. 0h = The capture mode event for Timer B has not occurred. 1h = A capture mode event has occurred for Timer B. This interrupt asserts when the subtimer is configured in input edge-time mode.
9	CBMRIS	R	X	GPTM Timer B Capture Mode Match Raw Interrupt. This bit is cleared by writing a 1 to the CBMCINT bit in the GPTMICR register. 0h = The capture mode match for Timer B has not occurred. 1h = The capture mode match has occurred for Timer B. This interrupt asserts when the values in the GPTMTBR and GPTMTBPR match the values in the GPTMTBMATCHR and GPTMTBPMR when configured in input edge-time mode.
8	TBTORIS	R	X	GPTM Timer B Time-Out Raw Interrupt. This bit is cleared by writing a 1 to the TBTOCINT bit in the GPTMICR register. 0h = Timer B has not timed out. 1h = Timer B has timed out. This interrupt is asserted when a one-shot or periodic mode timer reaches the count limit (0 or the value loaded into GPTMTBILR, depending on the count direction).
7-6	RESERVED	R	X	
5	DMAARIS	R	X	GPTM Timer A DMA Done Raw Interrupt Status 0h = The Timer A DMA transfer has not completed. 1h = The Timer A DMA transfer has completed.

Copyright © 2017, Texas Instruments Incorporated

Table 9-14. GPTMRIS Register Field Descriptions (continued)

Bit	Field	Type	Reset	Description
4	TAMRIS	R	X	GPTM Timer A Match Raw Interrupt. This bit is cleared by writing a 1 to the TAMCINT bit in the GPTMICR register. 0h = The match value has not been reached. 1h = The TAMIE bit is set in the GPTMTAMR register, and the match value in the GPTMTAMATCHR and (optionally) GPTMTAPMR registers have been reached when configured in one-shot or periodic mode.
3	RESERVED	R	X	
2	CAERIS	R	X	GPTM Timer A Capture Mode Event Raw Interrupt. This bit is cleared by writing a 1 to the CAECINT bit in the GPTMICR register. 0h = The capture mode event for Timer A has not occurred. 1h = A capture mode event has occurred for Timer A. This interrupt asserts when the subtimer is configured in input edge-time mode.
1	CAMRIS	R	X	GPTM Timer A Capture Mode Match Raw Interrupt. This bit is cleared by writing a 1 to the CAMCINT bit in the GPTMICR register. 0h = The capture mode match for Timer A has not occurred. 1h = A capture mode match has occurred for Timer A. This interrupt asserts when the values in the GPTMTAR and GPTMTAPR match the values in the GPTMTAMATCHR and GPTMTAPMR when configured in input edge-time mode.
0	TATORIS	R	X	GPTM Timer A Time-Out Raw Interrupt. This bit is cleared by writing a 1 to the TATOCINT bit in the GPTMICR register. 0h = Timer A has not timed out. 1h = Timer A has timed out. This interrupt is asserted when a one-shot or periodic mode timer reaches it's count limit (0 or the value loaded into GPTMTAILR, depending on the count direction).

Copyright © 2017, Texas Instruments Incorporated

9.5.7 GPTMMIS Register (offset = 20h) [reset = 0h]

Register mask: 0h

GPTMMIS is shown in Figure 9-11 and described in Table 9-15.

Figure 9-11. GPTMMIS Register

31	30	29	28	27	26	25	24
RESERVED							
R-X							
23	22	21	20	19	18	17	16
RESERVED							
R-X							
15	14	13	12	11	10	9	8
RESERVED		DMABMIS	RESERVED	TBMMIS	CBEMIS	CBMMIS	TBTOMIS
R-X		R-X	R-X	R-X	R-X	R-X	R-X
7	6	5	4	3	2	1	0
RESERVED		DMAAMIS	TAMMIS	RESERVED	CAEMIS	CAMMIS	TATOMIS
R-X		R-X	R-X	R-X	R-X	R-X	R-X

Table 9-15. GPTMMIS Register Field Descriptions

Bit	Field	Type	Reset	Description
31-14	RESERVED	R	X	
13	DMABMIS	R	X	GPTM Timer B DMA Done Masked Interrupt. This bit is cleared by writing a 1 to the DMABINT bit in the GPTMICR register. 0h = A Timer B DMA done interrupt has not occurred or is masked. 1h = An unmasked Timer B DMA done interrupt has occurred.
12	RESERVED	R	X	
11	TBMMIS	R	X	GPTM Timer B Match Masked Interrupt. This bit is cleared by writing a 1 to the TBMCINT bit in the GPTMICR register. 0h = A Timer B mode match interrupt has not occurred or is masked. 1h = An unmasked Timer B mode match interrupt has occurred.
10	CBEMIS	R	X	GPTM Timer B Capture Mode Event Masked Interrupt. This bit is cleared by writing a 1 to the CBECINT bit in the GPTMICR register. 0h = A Capture B event interrupt has not occurred or is masked. 1h = An unmasked Capture B event interrupt has occurred.
9	CBMMIS	R	X	GPTM Timer B Capture Mode Match Masked Interrupt. This bit is cleared by writing a 1 to the CBMCINT bit in the GPTMICR register. 0h = A Capture B mode match interrupt has not occurred or is masked. 1h = An unmasked Capture B match interrupt has occurred.
8	TBTOMIS	R	X	GPTM Timer B Time-Out Masked Interrupt. This bit is cleared by writing a 1 to the TBTOCINT bit in the GPTMICR register. 0h = A Timer B time-out interrupt has not occurred or is masked. 1h = An unmasked Timer B time-out interrupt has occurred.
7-6	RESERVED	R	X	
5	DMAAMIS	R	X	GPTM Timer A DMA Done Masked Interrupt. This bit is cleared by writing a 1 to the DMAAINT bit in the GPTMICR register. 0h = A Timer A DMA done interrupt has not occurred or is masked. 1h = An unmasked Timer A DMA done interrupt has occurred.
4	TAMMIS	R	X	GPTM Timer A Match Masked Interrupt. This bit is cleared by writing a 1 to the TAMCINT bit in the GPTMICR register. 0h = A Timer A mode match interrupt has not occurred or is masked. 1h = An unmasked Timer A mode match interrupt has occurred.
3	RESERVED	R	X	

Copyright © 2017, Texas Instruments Incorporated

Table 9-15. GPTMMIS Register Field Descriptions (continued)

Bit	Field	Type	Reset	Description
2	CAEMIS	R	X	GPTM Timer A Capture Mode Event Masked Interrupt. This bit is cleared by writing a 1 to the CAECINT bit in the GPTMICR register. 0h = A Capture A event interrupt has not occurred or is masked. 1h = An unmasked Capture A event interrupt has occurred.
1	CAMMIS	R	X	GPTM Timer A Capture Mode Match Masked Interrupt. This bit is cleared by writing a 1 to the CAMCINT bit in the GPTMICR register. 0h = A Capture A mode match interrupt has not occurred or is masked. 1h = An unmasked Capture A match interrupt has occurred.
0	TATOMIS	R	X	GPTM Timer A Time-Out Masked Interrupt. This bit is cleared by writing a 1 to the TATOCINT bit in the GPTMICR register. 0h = A Timer A time-out interrupt has not occurred or is masked. 1h = An unmasked Timer A time-out interrupt has occurred.

Copyright © 2017, Texas Instruments Incorporated

9.5.8 GPTMICR Register (offset = 24h) [reset = 0h]

Register mask: 0h

GPTMICR is shown in Figure 9-12 and described in Table 9-16.

This register clears the status bits in the GPTMRIS and GPTMMIS registers. Writing a 1 to a bit clears the corresponding bit in the GPTMRIS and GPTMMIS registers.

Figure 9-12. GPTMICR Register

31	30	29	28	27	26	25	24
RESERVED							
R-X							
23	22	21	20	19	18	17	16
RESERVED							
R-X							
15	14	13	12	11	10	9	8
RESERVED		DMABINT	RESERVED	TBMCINT	CBECINT	CBMCINT	TBTOCINT
R-X		W1C-X	R-X	W1C-X	W1C-X	W1C-X	W1C-X
7	6	5	4	3	2	1	0
RESERVED		DMAAINT	TAMCINT	RESERVED	CAECINT	CAMCINT	TATOCINT
R-X		W1C-X	W1C-X	R-X	W1C-X	W1C-X	W1C-X

Table 9-16. GPTMICR Register Field Descriptions

Bit	Field	Type	Reset	Description
31-14	RESERVED	R	X	
13	DMABINT	W1C	X	GPTM Timer B DMA Done Interrupt Clear. Writing a 1 to this bit clears the DMABRIS bit in the GPTMRIS register and the DMABMIS bit in the GPTMMIS register.
12	RESERVED	R	X	
11	TBMCINT	W1C	X	GPTM Timer B Match Interrupt Clear. Writing a 1 to this bit clears the TBMRIS bit in the GPTMRIS register and the TBMMIS bit in the GPTMMIS register.
10	CBECINT	W1C	X	GPTM Timer B Capture Mode Event Interrupt Clear. Writing a 1 to this bit clears the CBERIS bit in the GPTMRIS register and the CBEMIS bit in the GPTMMIS register.
9	CBMCINT	W1C	X	GPTM Timer B Capture Mode Match Interrupt Clear. Writing a 1 to this bit clears the CBMRIS bit in the GPTMRIS register and the CBMMIS bit in the GPTMMIS register.
8	TBTOCINT	W1C	X	GPTM Timer B Time-Out Interrupt Clear. Writing a 1 to this bit clears the TBTORIS bit in the GPTMRIS register and the TBTOMIS bit in the GPTMMIS register.
7-6	RESERVED	R	X	
5	DMAAINT	W1C	X	GPTM Timer A DMA Done Interrupt Clear. Writing a 1 to this bit clears the DMAARIS bit in the GPTMRIS register and the DMAAMIS bit in the GPTMMIS register.
4	TAMCINT	W1C	X	GPTM Timer A Match Interrupt Clear. Writing a 1 to this bit clears the TAMRIS bit in the GPTMRIS register and the TAMMIS bit in the GPTMMIS register.
3	RESERVED	R	X	
2	CAECINT	W1C	X	GPTM Timer A Capture Mode Event Interrupt Clear. Writing a 1 to this bit clears the CAERIS bit in the GPTMRIS register and the CAEMIS bit in the GPTMMIS register.
1	CAMCINT	W1C	X	GPTM Timer A Capture Mode Match Interrupt Clear. Writing a 1 to this bit clears the CAMRIS bit in the GPTMRIS register and the CAMMIS bit in the GPTMMIS register.

Copyright © 2017, Texas Instruments Incorporated

Table 9-16. GPTMICR Register Field Descriptions (continued)

Bit	Field	Type	Reset	Description
0	TATOCINT	W1C	X	GPTM Timer A Time-Out Raw Interrupt. Writing a 1 to this bit clears the TATORIS bit in the GPTMRIS register and the TATOMIS bit in the GPTMMIS register.

Copyright © 2017, Texas Instruments Incorporated

9.5.9 GPTMTAILR Register (offset = 28h) [reset = FFFFFFFFh]

GPTMTAILR is shown in Figure 9-13 and described in Table 9-17.

When a GPTM is configured to one of the 32-bit modes, GPTMTAILR appears as a 32-bit register (the upper 16-bits correspond to the contents of the GPTM Timer B Interval Load (GPTMTBILR) register). In a 16-bit mode, the upper 16 bits of this register read as 0s and have no effect on the state of GPTMTBILR.

Figure 9-13. GPTMTAILR Register

31	30	29	28	27	26	25	24	23	22	21	20	19	18	17	16	15	14	13	12	11	10	9	8	7	6	5	4	3	2	1	0
TAILR																															
R/W-FFFFFFFFh																															

Table 9-17. GPTMTAILR Register Field Descriptions

Bit	Field	Type	Reset	Description
31-0	TAILR	R/W	FFFFFFFFh	GPTM Timer A Interval Load Register. Writing this field loads the counter for Timer A. A read returns the current value of GPTMTAILR.

Copyright © 2017, Texas Instruments Incorporated

9.5.10 GPTMTBILR Register (offset = 2Ch) [reset = FFFFh]

GPTMTBILR is shown in Figure 9-14 and described in Table 9-18.

When a GPTM is configured to one of the 32-bit modes, the contents of bits 15:0 in this register are loaded into the upper 16 bits of the GPTMTAILR register. Reads from this register return the current value of Timer B, and writes are ignored. In a 16-bit mode, bits 15:0 are used for the load value. Bits 31:16 are reserved in both cases.

Figure 9-14. GPTMTBILR Register

31	30	29	28	27	26	25	24	23	22	21	20	19	18	17	16	15	14	13	12	11	10	9	8	7	6	5	4	3	2	1	0
TBILR																															
R/W-FFFFh																															

Table 9-18. GPTMTBILR Register Field Descriptions

Bit	Field	Type	Reset	Description
31-0	TBILR	R/W	FFFFh	GPTM Timer B Interval Load Register. Writing this field loads the counter for Timer B. A read returns the current value of GPTMTBILR. When a 16/32-bit GPTM is in 32-bit mode, writes are ignored, and reads return the current value of GPTMTBILR.

Copyright © 2017, Texas Instruments Incorporated

9.5.11 GPTMTAMATCHR Register (offset = 30h) [reset = FFFFFFFFh]

GPTMTAMATCHR is shown in Figure 9-15 and described in Table 9-19.

When a 16/32-bit GPTM is configured to one of the 32-bit modes, GPTMTAMATCHR appears as a 32-bit register (the upper 16-bits correspond to the contents of the GPTM Timer B Match (GPTMTBMATCHR) register). In a 16-bit mode, the upper 16 bits of this register read as 0s and have no effect on the state of GPTMTBMATCHR.

Figure 9-15. GPTMTAMATCHR Register

31	30	29	28	27	26	25	24	23	22	21	20	19	18	17	16	15	14	13	12	11	10	9	8	7	6	5	4	3	2	1	0
TAMR																															
R/W-FFFFFFFFh																															

Table 9-19. GPTMTAMATCHR Register Field Descriptions

Bit	Field	Type	Reset	Description
31-0	TAMR	R/W	FFFFFFFFh	GPTM Timer A Match Register. This value is compared to the GPTMTAR register to determine match events.

Copyright © 2017, Texas Instruments Incorporated

9.5.12 GPTMTBMATCHR Register (offset = 34h) [reset = FFFFh]

GPTMTBMATCHR is shown in Figure 9-16 and described in Table 9-20.

When a GPTM is configured to one of the 32-bit modes, the contents of bits 15:0 in this register are loaded into the upper 16 bits of the GPTMTAMATCHR register. Reads from this register return the current match value of Timer B, and writes are ignored. In a 16-bit mode, bits 15:0 are used for the match value. Bits 31:16 are reserved in both cases.

Figure 9-16. GPTMTBMATCHR Register

31	30	29	28	27	26	25	24	23	22	21	20	19	18	17	16	15	14	13	12	11	10	9	8	7	6	5	4	3	2	1	0
TBMR																															
R/W-FFFFh																															

Table 9-20. GPTMTBMATCHR Register Field Descriptions

Bit	Field	Type	Reset	Description
31-0	TBMR	R/W	FFFFh	GPTM Timer B Match Register. This value is compared to the GPTMTBR register to determine match events.

Copyright © 2017, Texas Instruments Incorporated

9.5.13 GPTMTAPR Register (offset = 38h) [reset = 0h]

GPTMTAPR is shown in Figure 9-17 and described in Table 9-21.

This register allows software to extend the range of the timers when they are used individually. When in one-shot or periodic down count modes, this register acts as a true prescaler for the timer counter. When acting as a true prescaler, the prescaler counts down to 0 before the value in the GPTMTAR and GPTMTAV registers are incremented. In all other individual or split modes, this register is a linear extension of the upper range of the timer counter, holding bits 23:16 in the 16-bit modes of the 16/32-bit GPTM.

Figure 9-17. GPTMTAPR Register

31	30	29	28	27	26	25	24	23	22	21	20	19	18	17	16	15	14	13	12	11	10	9	8	7	6	5	4	3	2	1	0
RESERVED																								TAPSR							
R-X																								R/W-0h							

Table 9-21. GPTMTAPR Register Field Descriptions

Bit	Field	Type	Reset	Description
31-8	RESERVED	R	X	
7-0	TAPSR	R/W	0h	GPTM Timer A Prescale. The register loads this value on a write. A read returns the current value of the register. For the 16/32-bit GPTM, this field contains the entire 8-bit prescaler.

Copyright © 2017, Texas Instruments Incorporated

9.5.14 GPTMTBPR Register (offset = 3Ch) [reset = 0h]

GPTMTBPR is shown in Figure 9-18 and described in Table 9-22.

This register allows software to extend the range of the timers when they are used individually. When in one-shot or periodic down count modes, this register acts as a true prescaler for the timer counter. When acting as a true prescaler, the prescaler counts down to 0 before the value in the GPTMTBR and b registers are incremented. In all other individual or split modes, this register is a linear extension of the upper range of the timer counter, holding bits 23:16 in the 16-bit modes of the 16/32-bit GPTM.

Figure 9-18. GPTMTBPR Register

31	30	29	28	27	26	25	24	23	22	21	20	19	18	17	16	15	14	13	12	11	10	9	8	7	6	5	4	3	2	1	0
RESERVED																								TBPSR							
R-X																								R/W-0h							

Table 9-22. GPTMTBPR Register Field Descriptions

Bit	Field	Type	Reset	Description
31-8	RESERVED	R	X	
7-0	TBPSR	R/W	0h	GPTM Timer B Prescale. The register loads this value on a write. A read returns the current value of this register. For the 16/32-bit GPTM, this field contains the entire 8-bit prescaler.

Copyright © 2017, Texas Instruments Incorporated

9.5.15 GPTMTAPMR Register (offset = 40h) [reset = 0h]

GPTMTAPMR is shown in Figure 9-19 and described in Table 9-23.

This register allows software to extend the range of the GPTMTAMATCHR when the timers are used individually. This register holds bits 23:16 in the 16-bit modes of the 16/32-bit GPTM.

Figure 9-19. GPTMTAPMR Register

31	30	29	28	27	26	25	24	23	22	21	20	19	18	17	16	15	14	13	12	11	10	9	8	7	6	5	4	3	2	1	0
RESERVED																								TAPSMR							
R-X																								R/W-0h							

Table 9-23. GPTMTAPMR Register Field Descriptions

Bit	Field	Type	Reset	Description
31-8	RESERVED	R	X	
7-0	TAPSMR	R/W	0h	GPTM TimerA Prescale Match. This value is used alongside GPTMTAMATCHR to detect timer match events while using a prescaler. For the 16/32-bit GPTM, this field contains the entire 8-bit prescaler match value.

Copyright © 2017, Texas Instruments Incorporated

9.5.16 GPTMTBPMR Register (offset = 44h) [reset = 0h]

GPTMTBPMR is shown in Figure 9-20 and described in Table 9-24.

This register allows software to extend the range of the GPTMTBMATCHR when the timers are used individually. This register holds bits 23:16 in the 16-bit modes of the 16/32-bit GPTM.

Figure 9-20. GPTMTBPMR Register

31	30	29	28	27	26	25	24	23	22	21	20	19	18	17	16	15	14	13	12	11	10	9	8	7	6	5	4	3	2	1	0
RESERVED																								TBPSMR							
R-X																								R/W-0h							

Table 9-24. GPTMTBPMR Register Field Descriptions

Bit	Field	Type	Reset	Description
31-8	RESERVED	R	X	
7-0	TBPSMR	R/W	0h	GPTM TimerB Prescale Match. This value is used alongside GPTMTBMATCHR to detect timer match events while using a prescaler.

Copyright © 2017, Texas Instruments Incorporated

9.5.17 GPTMTAR Register (offset = 48h) [reset = FFFFFFFFh]

GPTMTAR is shown in Figure 9-21 and described in Table 9-25.

When a GPTM is configured to one of the 32-bit modes, GPTMTAR appears as a 32-bit register (the upper 16-bits correspond to the contents of the GPTM Timer B (GPTMTBR) register). In the 16-bit input edge-count, input edge-time, and PWM modes, bits 15:0 contain the value of the counter and bits 23:16 contain the value of the prescaler, which is the upper 8 bits of the count. Bits 31:24 always read as 0. To read the value of the prescaler in 16-bit one-shot and periodic modes, read bits [23:16] in the GPTMTAV register. To read the value of the prescalar in periodic snapshot mode, read the Timer A Prescale Snapshot (GPTMTAPS) register.

Figure 9-21. GPTMTAR Register

31	30	29	28	27	26	25	24	23	22	21	20	19	18	17	16	15	14	13	12	11	10	9	8	7	6	5	4	3	2	1	0
TAR																															
R-FFFFFFFFh																															

Table 9-25. GPTMTAR Register Field Descriptions

Bit	Field	Type	Reset	Description
31-0	TAR	R	FFFFFFFFh	GPTM Timer A Register. A read returns the current value of the GPTM Timer A Count register, in all cases except for input edge-count and time modes. In the input edge-count mode, this register contains the number of edges that have occurred. In the input edge-time mode, this register contains the time at which the last edge event took place.

Copyright © 2017, Texas Instruments Incorporated

9.5.18 GPTMTBR Register (offset = 4Ch) [reset = FFFFh]

GPTMTBR is shown in Figure 9-22 and described in Table 9-26.

When a GPTM is configured to one of the 32-bit modes, the contents of bits 15:0 in this register are loaded into the upper 16 bits of the GPTMTAR register. Reads from this register return the current value of Timer B. In a 16-bit mode, bits 15:0 contain the value of the counter and bits 23:16 contain the value of the prescaler in input edge-count, input edge-time, and PWM modes, which is the upper 8 bits of the count. Bits 31:24 always read as 0. To read the value of the prescaler in 16-bit one-shot and periodic modes, read bits [23:16] in the GPTMTBV register. To read the value of the prescalar in periodic snapshot mode, read the Timer B Prescale Snapshot (GPTMTBPS) register.

Figure 9-22. GPTMTBR Register

31	30	29	28	27	26	25	24	23	22	21	20	19	18	17	16	15	14	13	12	11	10	9	8	7	6	5	4	3	2	1	0
TBR																															
R-FFFFh																															

Table 9-26. GPTMTBR Register Field Descriptions

Bit	Field	Type	Reset	Description
31-0	TBR	R	FFFFh	GPTM Timer B Register. A read returns the current value of the GPTM Timer B Count register, in all cases except for input edge-count and time modes. In the input edge-count mode, this register contains the number of edges that have occurred. In the input edge-time mode, this register contains the time at which the last edge event took place.

Copyright © 2017, Texas Instruments Incorporated

9.5.19 GPTMTAV Register (offset = 50h) [reset = FFFFFFFFh]

GPTMTAV is shown in Figure 9-23 and described in Table 9-27.

When a 16/32-bit GPTM is configured to one of the 32-bit modes, GPTMTAV appears as a 32-bit register (the upper 16-bits correspond to the contents of the GPTM Timer B Value (GPTMTBV) register). In a 16-bit mode, bits 15:0 contain the value of the counter and bits 23:16 contain the current, free-running value of the prescaler, which is the upper 8 bits of the count in input edge-count, input edge-time, PWM, and one-shot or periodic up count modes. In one-shot or periodic down count modes, the prescaler stored in 23:16 is a true prescaler, meaning bits 23:16 count down before decrementing the value in bits 15:0. The prescaler in bits 31:24 always reads as 0.

Figure 9-23. GPTMTAV Register

31	30	29	28	27	26	25	24	23	22	21	20	19	18	17	16	15	14	13	12	11	10	9	8	7	6	5	4	3	2	1	0
TAV																															
R/W-FFFFFFFFh																															

Table 9-27. GPTMTAV Register Field Descriptions

Bit	Field	Type	Reset	Description
31-0	TAV	R/W	FFFFFFFFh	GPTM Timer A Value. A read returns the current, free-running value of Timer A in all modes. When written, the value written into this register is loaded into the GPTMTAR register on the next clock cycle. Note: In 16-bit mode, only the lower 16-bits of the GPTMTAV register can be written with a new value. Writes to the prescaler bits have no effect.

Copyright © 2017, Texas Instruments Incorporated

9.5.20 GPTMTBV Register (offset = 54h) [reset = FFFFh]

GPTMTBV is shown in Figure 9-24 and described in Table 9-28.

When a 16/32-bit GPTM is configured to one of the 32-bit modes, the contents of bits 15:0 in this register are loaded into the upper 16 bits of the GPTMTAV register. Reads from this register return the current free-running value of Timer B. In a 16-bit mode, bits 15:0 contain the value of the counter and bits 23:16 contain the current, free-running value of the prescaler, which is the upper 8 bits of the count in input edge-count, input edge-time, PWM, and one-shot or periodic up count modes. In one-shot or periodic down count modes, the prescaler stored in 23:16 is a true prescaler, meaning bits 23:16 count down before decrementing the value in bits 15:0. The prescaler in bits 31:24 always reads as 0.

Figure 9-24. GPTMTBV Register

31	30	29	28	27	26	25	24	23	22	21	20	19	18	17	16	15	14	13	12	11	10	9	8	7	6	5	4	3	2	1	0
TBV																															
R/W-FFFFh																															

Table 9-28. GPTMTBV Register Field Descriptions

Bit	Field	Type	Reset	Description
31-0	TBV	R/W	FFFFh	GPTM Timer B Value. A read returns the current, free-running value of Timer A in all modes. When written, the value written into this register is loaded into the GPTMTAR register on the next clock cycle. In 16-bit mode, only the lower 16-bits of the GPTMTBV register can be written with a new value. Writes to the prescaler bits have no effect.

Copyright © 2017, Texas Instruments Incorporated

9.5.21 GPTMDMAEV Register (offset = 6Ch) [reset = 0h]

GPTMDMAEV is shown in Figure 9-25 and described in Table 9-29.

This register allows software to enable and disable GPTM DMA trigger events. Setting a bit enables the corresponding DMA trigger, while clearing a bit disables it.

Figure 9-25. GPTMDMAEV Register

31	30	29	28	27	26	25	24
RESERVED							
R-0h							
23	22	21	20	19	18	17	16
RESERVED							
R-0h							
15	14	13	12	11	10	9	8
RESERVED				TBMDMAEN	CBEDMAEN	CBMDMAEN	TBTODMAEN
R-0h				R/W-0h	R/W-0h	R/W-0h	R/W-0h
7	6	5	4	3	2	1	0
RESERVED			TAMDMAEN	RTCDMAEN	CAEDMAEN	CAMDMAEN	TATODMAEN
R-0h			R/W-0h	R/W-0h	R/W-0h	R/W-0h	R/W-0h

Table 9-29. GPTMDMAEV Register Field Descriptions

Bit	Field	Type	Reset	Description
31-12	RESERVED	R	0h	
11	TBMDMAEN	R/W	0h	GPTM B Mode Match Event DMA Trigger Enable. When this bit is enabled, a Timer B dma_req signal is sent to the DMA when a mode match has occurred. 0h = Timer B mode match DMA trigger is disabled. 1h = Timer B DMA mode match trigger is enabled
10	CBEDMAEN	R/W	0h	GPTM B Capture Event DMA Trigger Enable. When this bit is enabled, a Timer B dma_req signal is sent to the DMA when a capture event has occurred. 0h = Timer B capture event DMA trigger is disabled. 1h = Timer B capture event DMA trigger is enabled.
9	CBMDMAEN	R/W	0h	GPTM B Capture Match Event DMA Trigger Enable. When this bit is enabled, a Timer B dma_req signal is sent to the DMA when a capture match event has occurred. 0h = Timer B capture match DMA trigger is disabled. 1h = Timer B capture match DMA trigger is enabled
8	TBTODMAEN	R/W	0h	GPTM B Time-Out Event DMA Trigger Enable. When this bit is enabled, a Timer B dma_req signal is sent to the DMA on a time-out event. 0h = Timer B time-out DMA trigger is disabled. 1h = Timer B time-out DMA trigger is enabled.
7-5	RESERVED	R	0h	
4	TAMDMAEN	R/W	0h	GPTM A Mode Match Event DMA Trigger Enable. When this bit is enabled, a Timer A dma_req signal is sent to the DMA when a mode match has occurred. 0h = Timer A mode match DMA trigger is disabled. 1h = Timer A DMA mode match trigger is enabled.
3	RTCDMAEN	R/W	0h	GPTM A RTC Match Event DMA Trigger Enable. When this bit is enabled, a Timer A dma_req signal is sent to the DMA when a RTC match has occurred. 0h = Timer A RTC match DMA trigger is disabled. 1h = Timer A RTC match DMA trigger is enabled.

Copyright © 2017, Texas Instruments Incorporated

Table 9-29. GPTMDMAEV Register Field Descriptions (continued)

Bit	Field	Type	Reset	Description
2	CAEDMAEN	R/W	0h	GPTM A Capture Event DMA Trigger Enable. When this bit is enabled, a Timer A dma_req signal is sent to the DMA when a capture event has occurred. 0h = Timer A capture event DMA trigger is disabled. 1h = Timer A capture event DMA trigger is enabled.
1	CAMDMAEN	R/W	0h	GPTM A Capture Match Event DMA Trigger Enable. When this bit is enabled, a Timer A dma_req signal is sent to the DMA when a capture match event has occurred. 0h = Timer A capture match DMA trigger is disabled. 1h = Timer A capture match DMA trigger is enabled.
0	TATODMAEN	R/W	0h	GPTM A Time-Out Event DMA Trigger Enable. When this bit is enabled, a Timer A dma_req signal is sent to the DMA on a time-out event. 0h = Timer A time-out DMA trigger is disabled. 1h = Timer A time-out DMA trigger is enabled.

Copyright © 2017, Texas Instruments Incorporated

Watchdog Timer

Topic Page

10.1 Overview 323
10.2 Functional Description 324
10.3 WATCHDOG Registers 325
10.4 MCU Watch Dog Controller Usage Caveats 333

Copyright © 2017, Texas Instruments Incorporated

10.1 Overview

The watchdog timer in CC32xx generates a regular interrupt or a reset when a time-out value is reached. The watchdog timer regains control when a system has failed due to a software error or due to the failure of an external device to respond in the expected way. The CC32xx has one watchdog timer module, clocked by the system clock.

The watchdog timer module supports the following features:

- 32-bit down-counter with a programmable load register
- Lock register protection from runaway software
- Reset generation cannot be disabled
- User-enabled stalling when the microcontroller asserts the CPU Halt flag during debug

The watchdog timer can be configured to generate an interrupt to the controller on its first time-out, and to generate a reset signal on its second time-out. Once the watchdog timer has been configured, the lock register can be written to prevent the timer configuration from being inadvertently altered.

The watchdog timer module supports the following clock sources:

- System clock (80 MHz in RUN mode)

The clock used for WDT is selected by the configuration register APRCM:WDTCLKEN.

10.1.1 Block Diagram

Figure 10-1. WDT Module Block Diagram

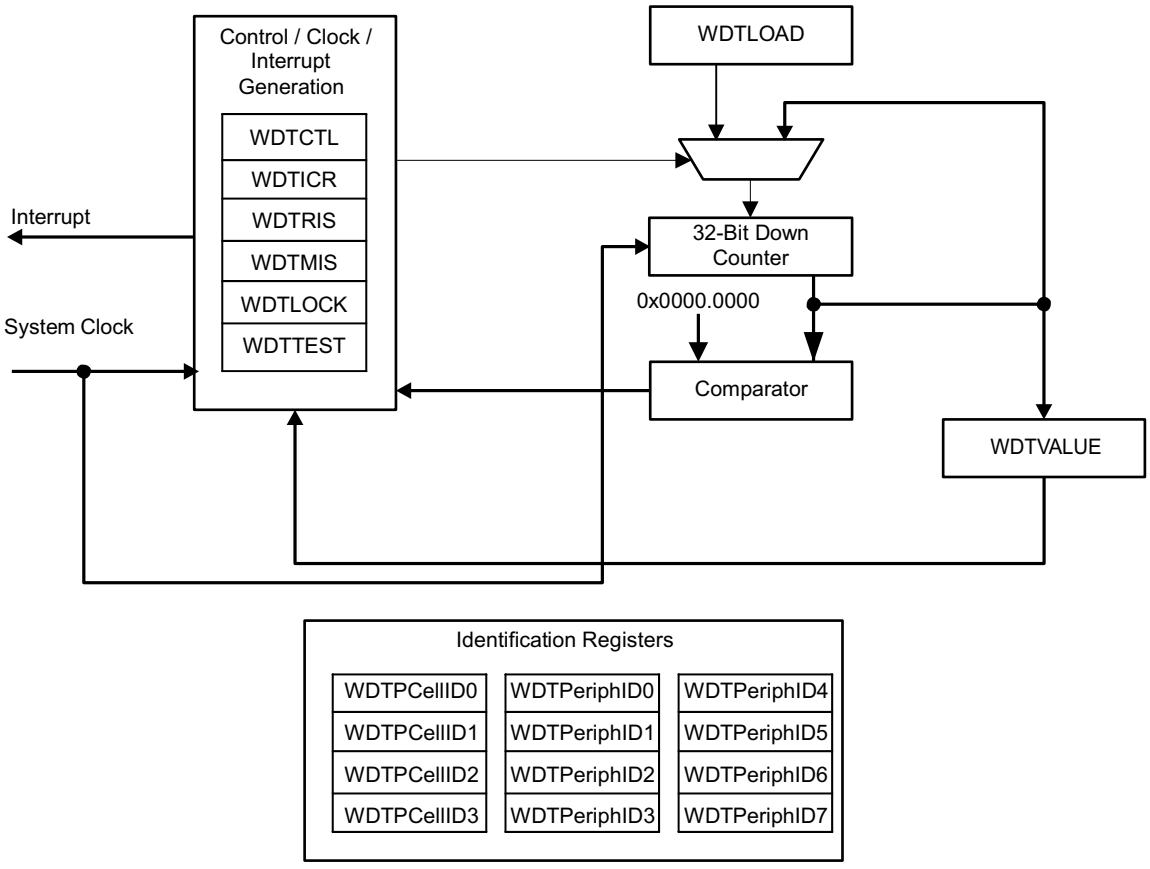

Copyright © 2017, Texas Instruments Incorporated

10.2 Functional Description

The watchdog timer module generates the first time-out signal (interrupt) when the 32-bit counter reaches the zero state after being enabled; enabling the counter also enables the watchdog timer interrupt. The WDT can be configured to reset on the second overflow. The WDT interrupt is maskable.

After the first time-out event, the 32-bit counter is re-loaded with the value of the Watchdog Timer Load (WDTLOAD) register, and the timer resumes counting down from that value. Once the watchdog timer has been configured, the Watchdog Timer Lock (WDTLOCK) register is written, which prevents the timer configuration from being inadvertently altered by software.

If the timer counts down to its zero state again before the first time-out interrupt is cleared, the watchdog timer asserts its reset signal to the system. If the interrupt is cleared before the 32-bit counter reaches its second time-out, the 32-bit counter is loaded with the value in the WDTLOAD register, and counting resumes from that value.

If WDTLOAD is written with a new value while the watchdog timer counter is counting, then the counter is loaded with the new value, and continues counting.

Writing to WDTLOAD does not clear an active interrupt. An interrupt must be specifically cleared by writing to the Watchdog Interrupt Clear (WDTICR) register.

The watchdog timer is disabled by default out of reset. To achieve maximum watchdog protection of the device, the watchdog timer can be enabled at the start of the reset vector.

NOTE: In the CC3200 R1 device, TI recommends that the application software, when rebooting after a WDT reset, requests the PRCM for hibernation (see Section 15.3.10) for 10 ms, and resumes its full functionality only after returning from this hibernation. This is effective for full recovery from any complex stuck-at scenario that involves the Wi-Fi subsystem.

NOTE: For CC3220 variants, this step is not needed, as it is done by MCU ROM bootloader.

The application can determine if the reset cause is WDT by reading the GPRCM:APPS_RESET_CAUSE[7:0] register (physical address 0×4402 D00C). On wakeup following a WDT reset, this would read the value 0101.

Refer to for more details.

10.2.1 Initialization and Configuration

The watchdog timer is configured using the following sequence:

1. Enable the peripheral clock by setting the RUNCLKEN bit in Watchdog Timer Clock Enable (WDTCLKEN) register.
2. Reset the watchdog module using the Watch Dog Timer Software Reset (WDTSWRST) register.
3. Load the WDTLOAD register with the desired timer load value.
4. Set the INTEN bit in the WDTCTL register to enable the watchdog, enable interrupts, and lock the control register.

If the software requires that all of the watchdog registers are locked, the watchdog timer module can be fully locked by writing any value to the WDTLOCK register. To unlock the watchdog timer, write a value of 0x1ACC.E551.

To service the watchdog, periodically reload the count value into the WDTLOAD register to restart the count. The interrupt can be enabled using the INTEN bit in the WDTCTL register to allow the processor to attempt corrective action if the watchdog is not serviced often enough. The RESEN bit in WDTCTL can be set so that the system resets if the failure is not recoverable using the ISR.

Copyright © 2017, Texas Instruments Incorporated

10.3 WATCHDOG Registers

Table 10-1 lists the memory-mapped registers for the WATCHDOG. All register offset addresses not listed in Table 10-1 should be considered as reserved locations and the register contents should not be modified.

lists the Watchdog registers. The offset listed is a hexadecimal increment to the register's address, relative to the Watchdog Timer base address: 0x4000.0000. Note that the Watchdog Timer module clock must be enabled before the registers can be programmed.

Table 10-1. WATCHDOG Registers

Offset	Acronym	Register Name	Section
0h	WDTLOAD	Watchdog Load	Section 10.3.1
4h	WDTVALUE	Watchdog Value	Section 10.3.2
8h	WDTCTL	Watchdog Control	Section 10.3.3
Ch	WDTICR	Watchdog Interrupt Clear	Section 10.3.4
10h	WDTRIS	Watchdog Raw Interrupt Status	Section 10.3.5
418h	WDTTEST	Watchdog Test	Section 10.3.6
C00h	WDTLOCK	Watchdog Lock	Section 10.3.7

Copyright © 2017, Texas Instruments Incorporated

10.3.1 WDTLOAD Register (offset = 0h) [reset = FFFFFFFFh]

WDTLOAD is shown in Figure 10-2 and described in Table 10-2.

This register is the 32-bit interval value used by the 32-bit counter. When this register is written, the value is immediately loaded and the counter restarts counting down from the new value. If the WDTLOAD register is loaded with 0x0000.0000, an interrupt is immediately generated.

Figure 10-2. WDTLOAD Register

31	30	29	28	27	26	25	24	23	22	21	20	19	18	17	16	15	14	13	12	11	10	9	8	7	6	5	4	3	2	1	0
WDTLOAD																															
R/W-FFFFFFFFh																															

LEGEND: R/W = Read/Write; R = Read only; W1toCl = Write 1 to clear bit; *-n* = value after reset

Table 10-2. WDTLOAD Register Field Descriptions

Bit	Field	Type	Reset	Description
31-0	WDTLOAD	R/W	FFFFFFFFh	Watchdog Load Value

Copyright © 2017, Texas Instruments Incorporated

10.3.2 WDTVALUE Register (offset = 4h) [reset = FFFFFFFFh]

WDTVALUE is shown in Figure 10-3 and described in Table 10-3.

This register contains the current count value of the timer.

Figure 10-3. WDTVALUE Register

31	30	29	28	27	26	25	24	23	22	21	20	19	18	17	16	15	14	13	12	11	10	9	8	7	6	5	4	3	2	1	0
WDTVALUE																															
R-FFFFFFFFh																															

LEGEND: R/W = Read/Write; R = Read only; W1toCl = Write 1 to clear bit; *-n* = value after reset

Table 10-3. WDTVALUE Register Field Descriptions

Bit	Field	Type	Reset	Description
31-0	WDTVALUE	R	FFFFFFFFh	Watchdog Value Current value of the 32-bit down counter.

Copyright © 2017, Texas Instruments Incorporated

10.3.3 WDTCTL Register (offset = 8h) [reset = 80000000h]

WDTCTL is shown in Figure 10-4 and described in Table 10-4.

This register is the watchdog control register. The watchdog timer can be used to generate a reset signal (on second time-out) or an interrupt on time-out.

Figure 10-4. WDTCTL Register

31	30	29	28	27	26	25	24
WRC	RESERVED						
R-1h	R-0h						
23	22	21	20	19	18	17	16
RESERVED							
R-0h							
15	14	13	12	11	10	9	8
RESERVED							
R-0h							
7	6	5	4	3	2	1	0
RESERVED					INTTYPE	RESERVED	INTEN
R-0h					R/W-0h	R/W-0h	R/W-0h

LEGEND: R/W = Read/Write; R = Read only; W1toCl = Write 1 to clear bit; *-n* = value after reset

Table 10-4. WDTCTL Register Field Descriptions

Bit	Field	Type	Reset	Description
31	WRC	R	1h	Write Complete The WRC values are defined as follows: Note: This bit is reserved for WDT0 and has a reset value of 0. 0h = A write access to one of the WDT1 registers is in progress. 1h = A write access is not in progress, and WDT1 registers can be read or written.
30-3	RESERVED	R	0h	
2	INTTYPE	R/W	0h	Watchdog Interrupt Type The INTTYPE values are defined as follows: 0h = Watchdog interrupt is a standard interrupt. 1h = Not Valid Value
1	RESERVED	R/W	0h	
0	INTEN	R/W	0h	Watchdog Interrupt Enable The INTEN values are defined as follows: 0h = Interrupt event disabled (once this bit is set, it can only be cleared by a hardware reset). 1h = Interrupt event enabled. Once enabled, all writes are ignored. Setting this bit enables the Watchdog Timer.

Copyright © 2017, Texas Instruments Incorporated

10.3.4 WDTICR Register (offset = Ch) [reset = 0h]

Register mask: 0h

WDTICR is shown in Figure 10-5 and described in Table 10-5.

This register is the interrupt clear register. A write of any value to this register clears the Watchdog interrupt and reloads the 32-bit counter from the WDTLOAD register. Write to this register when a watchdog time-out interrupt has occurred to properly service the Watchdog. Value for a read or reset is indeterminate.

Figure 10-5. WDTICR Register

31	30	29	28	27	26	25	24	23	22	21	20	19	18	17	16	15	14	13	12	11	10	9	8	7	6	5	4	3	2	1	0
WDTINTCLR																															
W-X																															

LEGEND: R/W = Read/Write; R = Read only; W1toCl = Write 1 to clear bit; *-n* = value after reset

Table 10-5. WDTICR Register Field Descriptions

Bit	Field	Type	Reset	Description
31-0	WDTINTCLR	W	X	Watchdog Interrupt Clear

Copyright © 2017, Texas Instruments Incorporated

10.3.5 WDTRIS Register (offset = 10h) [reset = 0h]

WDTRIS is shown in Figure 10-6 and described in Table 10-6.

This register is the raw interrupt status register. Watchdog interrupt events can be monitored via this register if the controller interrupt is masked.

Figure 10-6. WDTRIS Register

31	30	29	28	27	26	25	24
RESERVED							
R-0h							
23	22	21	20	19	18	17	16
RESERVED							
R-0h							
15	14	13	12	11	10	9	8
RESERVED							
R-0h							
7	6	5	4	3	2	1	0
RESERVED							WDTRIS
R-0h							R-0h

LEGEND: R/W = Read/Write; R = Read only; W1toCl = Write 1 to clear bit; *-n* = value after reset

Table 10-6. WDTRIS Register Field Descriptions

Bit	Field	Type	Reset	Description
31-1	RESERVED	R	0h	
0	WDTRIS	R	0h	Watchdog Raw Interrupt Status 0h = The watchdog has not timed out. 1h = A watchdog time-out event has occurred.

Copyright © 2017, Texas Instruments Incorporated

10.3.6 WDTTEST Register (offset = 418h) [reset = 0h]

WDTTEST is shown in Figure 10-7 and described in Table 10-7.

This register provides user-enabled stalling when the microcontroller asserts the CPU halt flag during debug.

Figure 10-7. WDTTEST Register

31	30	29	28	27	26	25	24
RESERVED							
R-0h							
23	22	21	20	19	18	17	16
RESERVED							
R-0h							
15	14	13	12	11	10	9	8
RESERVED							STALL
R-0h							R/W-0h
7	6	5	4	3	2	1	0
RESERVED							
R-0h							

LEGEND: R/W = Read/Write; R = Read only; W1toCl = Write 1 to clear bit; *-n* = value after reset

Table 10-7. WDTTEST Register Field Descriptions

Bit	Field	Type	Reset	Description
31-9	RESERVED	R	0h	
8	STALL	R/W	0h	Watchdog Stall Enable 0h = The watchdog timer continues counting if the microcontroller is stopped with a debugger. 1h = If the microcontroller is stopped with a debugger, the watchdog timer stops counting. Once the microcontroller is restarted, the watchdog timer resumes counting.
7-0	RESERVED	R	0h	

Copyright © 2017, Texas Instruments Incorporated

10.3.7 WDTLOCK Register (offset = C00h) [reset = 0h]

WDTLOCK is shown in Figure 10-8 and described in Table 10-8.

Writing 0x1ACC.E551 to the WDTLOCK register enables write access to all other registers. Writing any other value to the WDTLOCK register re-enables the locked state for register writes to all the other registers, except for the Watchdog Test (WDTTEST) register. The locked state will be enabled after 2 clock cycles. Reading the WDTLOCK register returns the lock status rather than the 32-bit value written. Therefore, when write accesses are disabled, reading the WDTLOCK register returns 0x0000.0001 (when locked; otherwise, the returned value is 0x0000.0000 (unlocked)).

Figure 10-8. WDTLOCK Register

31	30	29	28	27	26	25	24	23	22	21	20	19	18	17	16	15	14	13	12	11	10	9	8	7	6	5	4	3	2	1	0
WDTLOCK																															
R/W-0h																															

LEGEND: R/W = Read/Write; R = Read only; W1toCl = Write 1 to clear bit; *-n* = value after reset

Table 10-8. WDTLOCK Register Field Descriptions

Bit	Field	Type	Reset	Description
31-0	WDTLOCK	R/W	0h	Watchdog Lock A write of the value 0x1ACC.E551 unlocks the watchdog registers for write access. A write of any other value reapplies the lock, preventing any register updates, except for the WDTTEST register. Avoid writes to the WDTTEST register when the watchdog registers are locked. A read of this register returns the following values: 0h = Unlocked 1h = Locked

Copyright © 2017, Texas Instruments Incorporated

10.4 MCU Watch Dog Controller Usage Caveats

10.4.1 System WatchDog

Behavior:

- The system WDOG timer expiry forces the MCU and network processor through a reset cycle, but the WLAN domain (MAC and Baseband) is not reset.
- Subsequent recovery takes MCU and NWP out of reset at the same time.

Issue:

- The above behavior does not allow a WLAN domain clean reset.
- The recovery flow order is not congruent to the software flow (NWP start-up is always initiated by the MCU once the MCU boot loading is completed).

Resolution: The MCU application must detect a recovery from the WDOG trigger and force the device into complete hibernation with a wake-up associated with an internal RTC timer. This ensures a complete system cleanup.

NOTE: For CC3220 variants, this step is not needed, as it is done by MCU ROM bootloader.

Copyright © 2017, Texas Instruments Incorporated

Figure 10-9. WatchDog Flow Chart

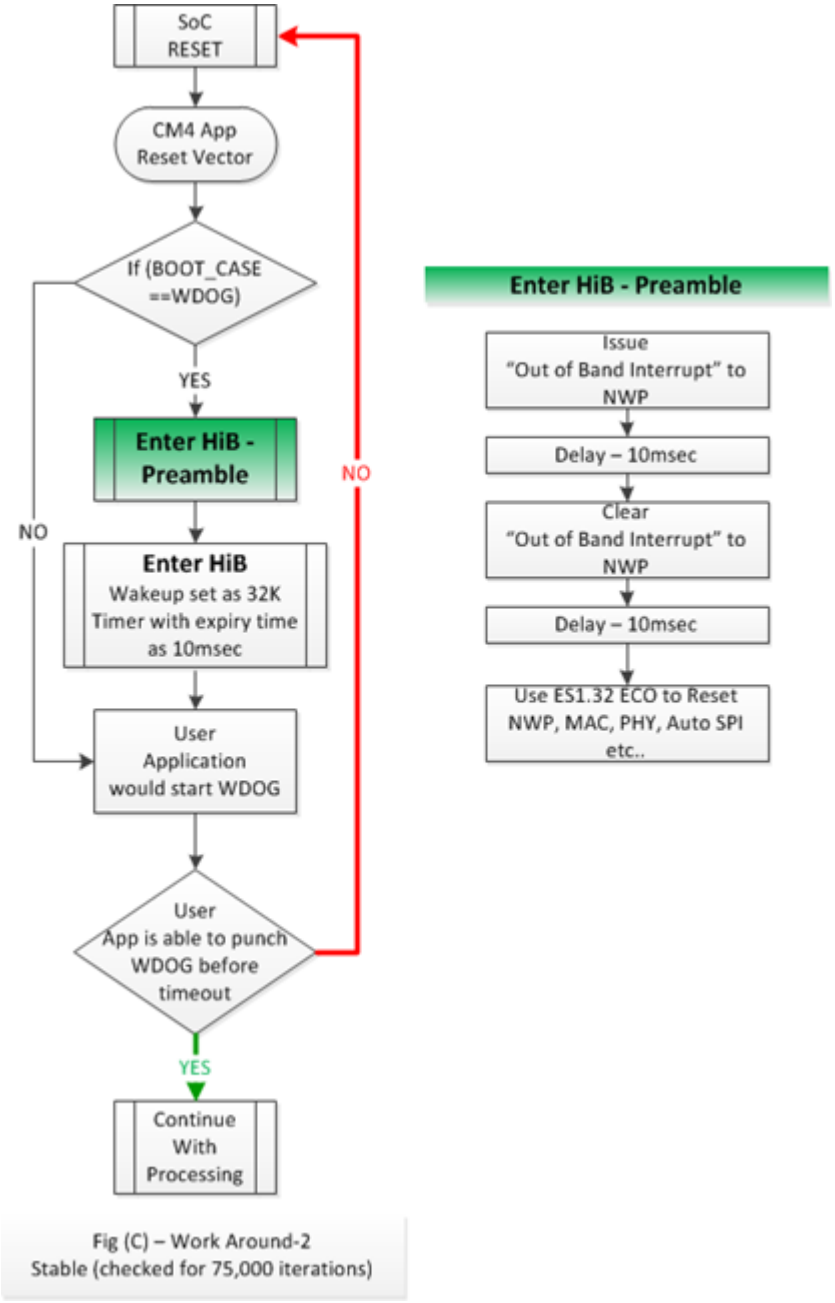

Fig (C) – Work Around-2
Stable (checked for 75,000 iterations)

Copyright © 2017, Texas Instruments Incorporated

10.4.2 System WatchDog Recovery Sequence

The following sequence should be integrated in the user application for a reliable recovery from the WDOG trigger:

Figure 10-10. System WatchDog Recovery Sequence

```
// Get the reset cause
ulResetCause = PRCMSysResetCauseGet();

// If the Reset Cause is recovery from WDOG trigger
if(ulResetCause == PRCM_WDT_RESET)
{
  // MCU interrupts NWP (this is Out of Band Interrupt)
  // This forces NWP to IDLE State
  HWREG(0x400F70B8) = 0x1;
  UtilsDelay(800000/5);

  // Clear the interrupt
  HWREG(0x400F70B0) = 0x1;
  UtilsDelay(800000/5);

  // Reset NWP, WLAN domains
  HWREG(0x4402E16C) |= 0x2;
  UtilsDelay(800);

  // Ensure ANA DCDC is moved to PFM mode before
  // invoking Hibernate
  HWREG(0x4402F024) &= 0xF7FFFFFF;

  // Choose the wake source as internal timer
  PRCMHibernateWakeupSourceEnable(PRCM_HIB_SLOW_CLK_CTR);

  //Setup the Hibernate period and enter Hibernate
  PRCMHibernateIntervalSet(330*3);
  PRCMHibernateEnter();
}
```


Copyright © 2017, Texas Instruments Incorporated

SD Host Controller Interface

Topic **Page**

11.1 Overview 337
11.2 SD Host Features 337
11.3 1-Bit SD Interface 338
11.4 Initialization and Configuration Using Peripheral APIs 339
11.5 Performance and Testing 344
11.6 Peripheral Library APIs 345
11.7 SD-HOST Registers 349

Copyright © 2017, Texas Instruments Incorporated

11.1 Overview

The Secure Digital Host (SD Host) controller on the CC32xx provides an interface between a local host (LH) such as a microprocessor controller (MCU) and an SD memory card, and handles SD transactions with minimal LH intervention.

The SD host provides SD card access in 1-bit mode, and deals with SD protocol at transmission level, data packing, adding cyclic redundancy checks (CRC), start/end bit, and checking for syntactical correctness. The application interface can send every SD command and either poll for the status of the adapter or wait for an interrupt request, which is sent back in case of exceptions or to warn of end of operation. The controller can be configured to generate DMA requests and work with minimum CPU intervention. Given the nature of integration of this peripheral on the CC32xx platform, TI recommends that developers use peripheral library APIs to control and operate the block.

This section emphasizes understanding the SD host APIs provided in the CC32xx Software Development Kit [Peripheral Library].

11.2 SD Host Features

- Full compliance with SD command and response sets, as defined in the SD memory card. Specifications, v2.0. Including high-capacity (size >2 GB) cards HC SD.
- Flexible architecture, allowing support for new command structure.
- 1-bit transfer mode specifications for SD cards
- Built-in 1024-byte buffer for read or write
  - 512-byte buffer for both transmit and receive
  - Each buffer is 32-bits wide by 128 words deep
- 32-bit-wide access bus to maximize bus throughput
- Single interrupt line for multiple interrupt source events
- Two slave DMA channels (1 for TX, 1 for RX)
- Programmable clock generation
- Integrates an internal transceiver that allows a direct connection to the SD card without external transceiver.
- Supports configurable busy and response timeout.
- Support for a wide range of card clock frequency with odd and even clock ratio. Maximum frequency supported is 24 MHz.

Copyright © 2017, Texas Instruments Incorporated

11.3 1-Bit SD Interface

Figure 11-1. SDHost Controller Interface Block Diagram

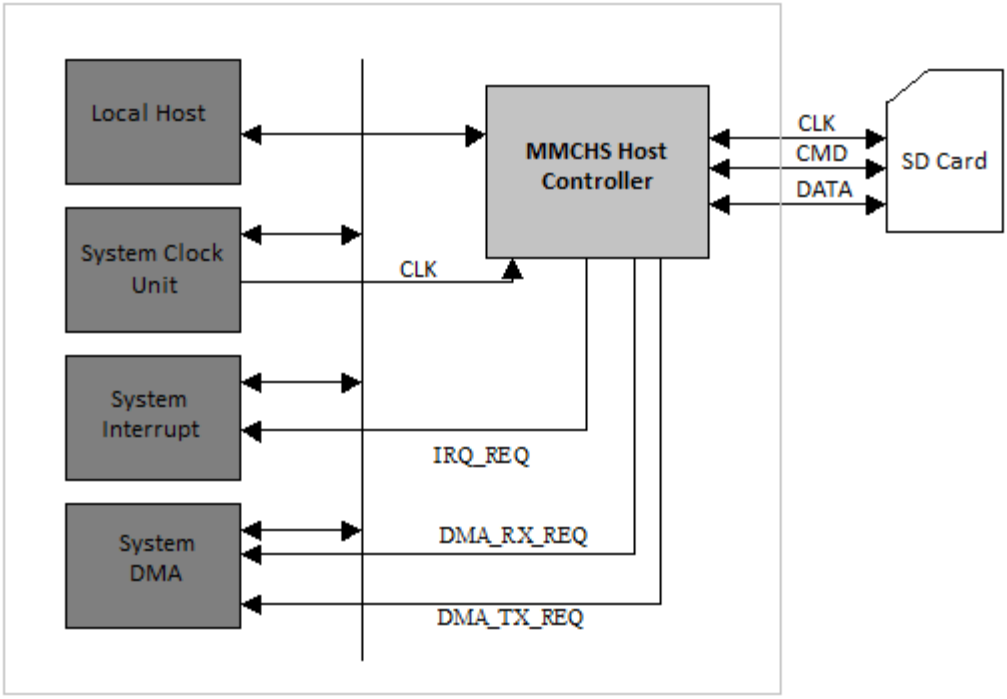

The interface uses three signal lines to communicate with the SD card:

1. CLK: Generated internally by SD host controller and provided to the external SD card.
2. CMD: Bidirectional; used to send commands and receive responses.
3. DATA: Bidirectional; used to send and receive data to and from the attached SD card.

The bus protocol between the SD host controller and the card is message-based. Each message is represented by one of the following parts:

- **Command**: A command starts an operation. The command is transferred serially from the SD host controller to the card on the CMD line.
- **Response**: A response is an answer to a command. The response is sent from the card to the SD host controller, and is transferred serially on the CMD line.
- **Data**: Data is transferred from the SD host controller to the card, or from a card to the SD host controller, using the DATA line.
- **Busy**: The data signal is maintained low by the card, as it programs the data received.

Copyright © 2017, Texas Instruments Incorporated

11.3.1 Clock and Reset Management

The Power, Reset and Clock Module (PRCM) manages the clock and reset functions. The on-chip SD host controller is sourced by a 120-MHz fixed clock that can be divided down to the required card clock frequency using the internal 10-bit divider of the module.

The user can reset the module to bring all the internal registers to their default state by calling the PRCM reset API with the appropriate parameters.

11.4 Initialization and Configuration Using Peripheral APIs

This section discusses the host initialization and configuration example, followed by showing how the peripheral APs can implement the standard SD card detection and initialization sequence.

11.4.1 Basic Initialization and Configuration

1. Enable SD host clock using PRCMPeripheralClkEnable(PRCM_SDHOST, PRCM_RUN_MODE_CLK).
2. In the pin-mux module, enable the appropriate pins for SD host functionality.
3. For a pin configured as CLK, configure the pin as an output by calling:

   ```
   PinDirModeSet(<PIN_NO>,PIN_DIR_MODE_OUT)
   ```

4. Soft reset and initialize the host controller:

   ```
   PRCMPeripheralReset(PRCM_SDHOST)
   SDHostInit(SDHOST_BASE)
   ```

5. Soft reset and initialize the host controller for 15-MHz card clocks:

   ```
   SDHostSetExpClk(SDHOST_BASE, PRCMPeripheralClockGet(PRCM_SDHOST), 15000000)
   ```


Copyright © 2017, Texas Instruments Incorporated

11.4.2 Sending Command

The following code shows how to send a command to an attached SD card using peripheral APIs.

```
SendCmd(unsigned long ulCmd, unsigned long ulArg)
{
  unsigned long ulStatus;

  //
  // Clear interrupt status
  //
  SDHostIntClear(SDHOST_BASE,0xFFFFFFFF);

  //
  // Send command
  //
  SDHostCmdSend(SDHOST_BASE,ulCmd,ulArg);

  //
  // Wait for command complete or error
  //
  do
  {
    ulStatus = SDHostIntStatus(SDHOST_BASE);
    ulStatus = (ulStatus
&amp; (SDHOST_INT_CC|SDHOST_INT_ERRI));
  }
  while( !ulStatus );

  //
  // Check error status
  //
  if(ulStatus
&amp;SDHOST_INT_ERRI)
  {
    //
    // Reset the command line
    //
    SDHostCmdReset(SDHOST_BASE);
    return 1;
  }
  else
  {
        return 0;
  }
}
```

The *ulCmd* parameter is logical OR of the SD command, expected response length, or flags, indicating if the command is followed by a block read or write, a multi-block read or write, and whether the host controller will generate a DMA request for data to and from the internal FIFO.

For example, the SD card command 0 (or GO_IDLE command) has neither a response associated with it nor any block read or write that follows it. The command does not take any argument. For this the SendCmd() is invoked as:

```
#define CMD_GO_IDLE_STATE    SDHOST_CMD_0
    SendCmd(CMD_GO_IDLE_STATE, 0)
```


Copyright © 2017, Texas Instruments Incorporated

Another command example is the SD card command 18, used to read multiple blocks from the SD Card. The command takes the block number or linear address of the first byte to be read based on the version and capacity of the attached card:

```
#define CMD_READ_MULTI_BLK    SDHOST_CMD_18| SDHOST_RD_CMD| SDHOST_RESP_LEN_48| SDHOST_MULTI_BLK
SendCmd(CMD_READ_MULTI_BLK,
<ulBlockNo>)
```

11.4.3 Card Detection and Initialization

The following code shows a card detection and initialization using peripheral APIs:

```
CardInit(CardAttrib_t *CardAttrib)
{
  unsigned long ulRet;
  unsigned long ulResp[4];

  //
  // Initialize the attributes.
  //
  CardAttrib->ulCardType = CARD_TYPE_UNKNOWN;
  CardAttrib->ulCapClass = CARD_CAP_CLASS_SDSC;
  CardAttrib->ulRCA      = 0;
  CardAttrib->ulVersion  = CARD_VERSION_1;

  //
  // Send std GO IDLE command
  //
  if( SendCmd(CMD_GO_IDLE_STATE, 0) == 0)
  {

    ulRet = SendCmd(CMD_SEND_IF_COND,0x00000100);

    //
    // It's a SD ver 2.0 or higher card
    //
    if(ulRet == 0)
    {
      CardAttrib->ulVersion = CARD_VERSION_2;
      CardAttrib->ulCardType = CARD_TYPE_SDCARD;

      //
      // Wait for card to become ready.
//
      do
      {
          //
          // Send ACMD41
          //
          SendCmd(CMD_APP_CMD,0);
          ulRet = SendCmd(CMD_SD_SEND_OP_COND,0x40E00000);

          //
          // Response contains 32-bit OCR register
          //
          SDHostRespGet(SDHOST_BASE,ulResp);

      }while(((ulResp[0] >> 31) == 0));

if(ulResp[0] &amp;amp; (1UL<<30))      {
        CardAttrib->ulCapClass = CARD_CAP_CLASS_SDHC;
      }
}
    else //It's a MMC or SD 1.x card
    {
```


Copyright © 2017, Texas Instruments Incorporated

```
      //
      // Wait for card to become ready.
      //
      do
      {
        if( (ulRet = SendCmd(CMD_APP_CMD,0)) == 0 )
        {
          ulRet = SendCmd(CMD_SD_SEND_OP_COND,0x00E00000);

          //
          // Response contains 32-bit OCR register
          //
          SDHostRespGet(SDHOST_BASE,ulResp);
        }
      }while((ulRet == 0)
&amp;&amp;((ulResp[0] >>31) == 0));

      //
      // Check the response
      //
      if(ulRet == 0)
      {
            CardAttrib->ulCardType = CARD_TYPE_SDCARD;
      }
      else // CMD 55 is not recognised by SDHost cards.
      {
        //
        // Confirm if its a SDHost card
        //
ulRet = SendCmd(CMD_SEND_OP_COND,0);
  if( ulRet == 0)
  {
          CardAttrib->ulCardType = CARD_TYPE_MMC;
  }
 }
 }
 }

  //
  // Get the RCA of the attached card
  //
  if(ulRet == 0)
  {
    ulRet = SendCmd(CMD_ALL_SEND_CID,0);
    if( ulRet == 0)
    {
      SendCmd(CMD_SEND_REL_ADDR,0);
      SDHostRespGet(SDHOST_BASE,ulResp);

      //
      //  Fill in the RCA
      //
      CardAttrib->ulRCA = (ulResp[0]
>> 16);

      //
      // Get tha card capacity
      //
      CardAttrib->ullCapacity = CardCapacityGet(CardAttrib->ulRCA);
    }
  }

  //
  // return status.
  //
```


Copyright © 2017, Texas Instruments Incorporated

```
  return ulRet;
}
```

The structure used in the API has following format:

```
typedef struct
{
  unsigned long  ulCardType;
  unsigned long  long ullCapacity;
  unsigned long  ulVersion;
  unsigned long  ulCapClass;
  unsigned short ulRCA;
}CardAttrib_t;
```

11.4.4 Block Read

The following code shows a block read using peripheral APIs:

```
unsigned long CardReadBlock(CardAttrib_t *Card, unsigned char *pBuffer,
              unsigned long ulBlockNo, unsigned long ulBlockCount)
{
  unsigned long ulSize;
  unsigned long ulBlkIndx;

  ulBlockCount = ulBlockCount + ulBlockNo;
  for(ulBlkIndx = ulBlockNo; ulBlkIndx
<ulBlockCount; ulBlkIndx++)
  {
    ulSize = 128;  // 512/4

   // Compute linear address from block no. for SDSC cards.
    if(Card->ulCapClass == CARD_CAP_CLASS_SDSC)
    {
          ulBlockNo = ulBlkIndx * 512;
    }

    if( SendCmd(CMD_READ_SINGLE_BLK, ulBlockNo) == 0 )
    {
      // Read out the data.
      while(ulSize--)
      {
        MAP_SDHostDataRead(SDHOST_BASE,((unsigned long *)pBuffer);
        pBuffer+=4;
      }
    }
    else
    {
      // Retutn error
      return 1;
    }
  }

  // Return success
  return 0;
}
```


Copyright © 2017, Texas Instruments Incorporated

11.4.5 Block Write

The following code shows a block write using peripheral APIs:

```
Unsigned long CardWriteBlock(CardAttrib_t *Card, unsigned char *pBuffer,
              unsigned long ulBlockNo, unsigned long ulBlockCount)
{

  unsigned long ulSize;
  unsigned long ulBlkIndx;

  ulBlockCount = ulBlockCount + ulBlockNo;
  for(ulBlkIndx = ulBlockNo; ulBlkIndx
<ulBlockCount; ulBlkIndx++)
  {

    ulSize = 128;
    if(Card->ulCapClass == CARD_CAP_CLASS_SDSC)
    {
      ulBlockNo = ulBlkIndx * 512;
    }

    if( SendCmd(CMD_WRITE_SINGLE_BLK, ulBlockNo) == 0 )
    {

      // Write the data
      while(ulSize--)
      {
        SDHostDataWrite(SDHOST_BASE,*((unsigned long *)pBuffer));
        pBuffer+=4;
      }

      // Wait for transfer completion.
      while( !(SDHostIntStatus(SDHOST_BASE)
&amp;SDHOST_INT_TC) );
    }
    else
    {
      return 1;
    }
  }

  // Return error
  return 0;
}
```

11.5 Performance and Testing

The APIs discussed above were tested with following cards types:

Table 11-1. Card Types

Vendor	Size	Capacity Class	Block Read/Write	Comments
Transcend	2 GB	SDSC	Passed	
Transcend	16 GB	SDHC	Passed	
Strontium	2 GB	SDSC	Passed	

Copyright © 2017, Texas Instruments Incorporated

Table 11-1. Card Types (continued)

Vendor	Size	Capacity Class	Block Read/Write	Comments
SanDisk	2 GB	SDSC	Passed	This card requires some additional delay after the card select command is sent to the card, and before sending a read or write command, or the command will never complete.
SanDisk	64 GB	SDXC	Passed	This card requires some additional delay after the card select command is sent to the card, and before sending a read or write command, or the command will never complete.
Kingston	16 GB	SDHC	Failed. Did not respond to block read/write commands	This card requires a special SW sequence to work properly. The initialization sequence is different from other cards.

Table 11-2 shows examples of throughput data using the CPU. These values were measured with 1-MB and 10-MB block read or write on a Class-4 Transcend 16-GB SDHC card:

Table 11-2. Throughput Data

Vendor and Type	Operation	Card Freq	80-MHz Cycles	Data (bytes)	Baud (bytes/sec)	Throughput (Mbps)
Class 4 Transcend	Read	24	67959516	1048576	1234354	9.4
	Read	24	680884716	10485760	1232016	9.4
	Write	12	236784547	1048576	354272	2.70
	Write	12	2442413554	10485760	343456	2.62
	Write	24	2151815366	10485760	389839	2.97
	Write	24	2152352658	10485760	389741	2.97

11.6 Peripheral Library APIs

This section lists the APIs, hosted in the CC32xx SDK (peripheral library) necessary for I2S configuration.

void SDHostInit(unsigned long ulBase)

- **Description**: This function configures the SD host module, enabling internal sub-modules.
- **Parameters**: *ulBase* – Base address of the SD host module
- **Return**: None

void SDHostCmdReset(unsigned long ulBase)

- **Description**: This function resets the SD host command line.
- **Parameters**: *ulBase* – Base address of the SD host module
- **Return**: None

long SDHostCmdSend(unsigned long ulBase,unsigned long ulCmd, unsigned ulArg)

- **Description**: This function sends a command to the attached card over the SD host interface.
- **Parameters**:
  - *ulBase* – Base address of the SD host module
  - *ulCmd* – Command to be send to the card

Copyright © 2017, Texas Instruments Incorporated

– *ulArg* – Argument for the command

The *ulCmd* parameter can be one of SDHOST_CMD_0 to SDHOST_CMD_63. It can be logically ORed with one or more of the following:

– SDHOST_MULTI_BLK: For multi-block transfer
– SDHOST_WR_CMD: If the command is followed by write data
– SDHOST_RD_CMD: If the command is followed by read data
– SDHOST_DMA_EN: If data transfer must generate a DMA request

- **Return**: Returns 0 on success, -1 otherwise

void SDHostIntRegister(unsigned long ulBase, void (*pfnHandler)(void))

- **Description**: This function registers the interrupt handler and enables the global interrupt in the interrupt controller; specific interrupts must be enabled using SDHostIntEnable(). It is the responsibility of the interrupt handler to clear the interrupt source.
- **Parameters**:
  – *ulBase* – Base address of the SD host module
  – *pfnHandler* – Pointer to the SD host interrupt handler function
- **Return**: None

void SDHostIntUnregister(unsigned long ulBase)

- **Description**: This function unregisters the interrupt handler and clears the handler to be called when a SD host interrupt occurs. This also masks off the interrupt in the interrupt controller, so that the interrupt handler is no longer called.
- **Parameters**: *ulBase* – Base address of the SD host module
- **Return**: None

void SDHostIntEnable(unsigned long ulBase,unsigned long ulIntFlags)

- **Description**: This function enables the indicated SD host interrupt sources. Only enabled sources can be reflected to the processor interrupt; disabled sources have no effect on the processor.
- **Parameters**:
  – *ulBase* – Base address of the SD host module
  – *ulIntFlags* – Bit mask of the interrupt sources to be enabled

  The *ulIntFlags* parameter is the logical OR of any of the following:
  – SDHOST_INT_CC: Command Complete interrupt
  – SDHOST_INT_TC: Transfer Complete interrupt
  – SDHOST_INT_BWR: Buffer Write Ready interrupt
  – SDHOST_INT_BWR: Buffer Read Ready interrupt
  – SDHOST_INT_ERRI: Error interrupt
    - Note that SDHOST_INT_ERRI can only be used with SDHostIntStatus(), and is internally logical OR of all error status bits. Setting this bit alone as *ulIntFlags* does not generate any interrupt.
  – SDHOST_INT_CTO: Command Timeout error interrupt
  – SDHOST_INT_CEB: Command End Bit error interrupt
  – SDHOST_INT_DTO: Data Timeout error interrupt
  – SDHOST_INT_DCRC: Data CRC error interrupt
  – SDHOST_INT_DEB: Data End Bit error
  – SDHOST_INT_CERR: Cart Status Error interrupt
  – SDHOST_INT_BADA: Bad Data error interrupt
  – SDHOST_INT_DMARD: Read DMA done interrupt
  – SDHOST_INT_DMAWR: Write DMA done interrupt
- **Return**: None

void SDHostIntDisable(unsigned long ulBase,unsigned long ulIntFlags)

Copyright © 2017, Texas Instruments Incorporated

- **Description**: This function disables the indicated SD host interrupt sources. Only enabled sources can be reflected to the processor interrupt.
- **Parameters**:
  - *ulBase* – Base address of the SD host module
  - *ulIntFlags* – Bit mask of the interrupt sources to be disabled
  The *ulIntFlags* parameter has the same definition as the *ulIntFlags* parameter to SDHostIntEnable().
- **Return**: None

unsigned long SDHostIntStatus(unsigned long ulBase)

- **Description**: This function returns the interrupt status for the specified SD host.
- **Parameters**: *ulBase* – Base address of the SD host module.
- **Return**: Returns the current interrupt status, enumerated as a bit field of values described in SDHostIntEnable().

void SDHostIntClear(unsigned long ulBase,unsigned long ulIntFlags)

- **Description**: The specified SD host interrupt sources are cleared, so that they no longer assert. This function must be called in the interrupt handler to keep the interrupt from being recognized again immediately upon exit.
- **Parameters**:
  - *ulBase* – Base address of the SD host module
  - *ulIntFlags* – Bit mask of the interrupt sources to be cleared
  The *ulIntFlags* parameter has the same definition as the *ulIntFlags* parameter to SDHostIntEnable().
- **Return**: None

Void SDHostCardErrorMaskSet(unsigned long ulBase, unsigned long ulErrMask)

- **Description**: This function sets the card status error mask for response type R1, R1b, R5, R5b, and R6. The parameter ulErrMask is the bit mask of card status errors to be enabled; if the corresponding bits in the card status field of a response are set, then the host controller indicates a card error interrupt status. Only bits referenced as type E (error) in the status field in the response can set a card status error.
- **Parameters**:
  - *ulBase* – Base address of the SD host module
  - *ulErrMask* – Bit mask of card status errors to be enabled
- **Return**: None

unsigned long SDHostCardErrorMaskGet(unsigned long ulBase)

- **Description**: This function gets the card status error mask for response type R1, R1b, R5, R5b, and R6.
- **Parameters**: *ulBase* – Base address of the SD host module
- **Return**: Returns the current card status error.

void SDHostSetExpClk(unsigned long ulBase, unsigned long ulSDHostClk, unsigned long ulCardClk)

- **Description**: This function configures the SD host interface to supply the specified clock to the connected card.
- **Parameters**:
  - *ulBase* – Base address of the SD host module
  - *ulSDHostClk* – The rate of clock supplied to SD host module
  - *ulCardClk* – Required SD interface clock
- **Return**: None

void SDHostRespGet(unsigned long ulBase, unsigned long ulRespnse[4])

- **Description**: This function gets the response from the SD card for the last command send.
- **Parameters**:

Copyright © 2017, Texas Instruments Incorporated

  - *ulBase* – Base address of the SD host module
  - *ulRespnse* – 128-bit response
- **Return**: None

void SDHostBlockSizeSet(unsigned long ulBase, unsigned short ulBlkSize)

- **Description**: This function sets the block size of the data transfer.
- **Parameters**:
  - *ulBase* – Base address of the SD host module
  - *ulBlkSize* – Transfer block size in bytes
    The parameter *ulBlkSize* is size of each data block in bytes. This should be in range 0 -2^10.
- **Return**: None

void SDHostBlockCountSet(unsigned long ulBase, unsigned short ulBlkCount)

- **Description**: This function sets block count for the data transfer. This must be set for each block transfer.
- **Parameters**:
  - *ulBase* – Base address of the SD host module
  - *ulBlkCount* – Number of blocks
- **Return**: None

tBoolean SDHostDataNonBlockingWrite(unsigned long ulBase, unsigned long ulData)

- **Description**: This function writes a single data word into the SD host write buffer. The function returns true if there was a space available in the buffer; else returns false.
- **Parameters**:
  - *ulBase* – Base address of the SD host module
  - *ulData* – Data word to be transferred
- **Return**: Return true on success, false otherwise

tBoolean SDHostDataNonBlockingRead(unsigned long ulBase, unsigned long *pulData)

- **Description**: This function reads a data word from the SD host read buffer. The function returns true if there was data available in the buffer; else returns false.
- **Parameters**:
  - *ulBase* – Base address of the SD host module
  - *pulData* – Pointer to data word to be transferred
- **Return**: Return true on success, false otherwise

void SDHostDataWrite(unsigned long ulBase, unsigned long ulData)

- **Description**: This function writes \e ulData into the SD host write buffer. If there is no space in the write buffer, this function waits until there is a space available before returning.
- **Parameters**:
  - *ulBase* – Base address of the SD host module
  - *ulData* – Data word to be transferred
- **Return**: None

void SDHostDataRead(unsigned long ulBase, unsigned long *ulData)

- **Description**: This function reads a single data word from the SD host read buffer. If there is no data available in the buffer, the function waits until a data word is received before returning.
- **Parameters**:
  - *ulBase* – Base address of the SD host module
  - *pulData* – Pointer to data word to be transferred
- **Return**: None

Copyright © 2017, Texas Instruments Incorporated

11.7 SD-HOST Registers

Table 11-4 lists the memory-mapped registers for the SD-HOST. All register offset addresses not listed in Table 11-4 should be considered as reserved locations and the register contents should not be modified.

Table 11-3. Base Address of SD-Host (also referred as MMCHS)

Module Name	Base Address
MMCHS1	0x4401 0000

Table 11-4. SD-HOST Registers

Offset	Acronym	Register Name	Section
124h	MMCHS_CSRE	Card Status Response Error register	Section 11.7.1
12Ch	MMCHS_CON	Configuration register	Section 11.7.2
204h	MMCHS_BLK	Transfer Length Configuration register	Section 11.7.3
208h	MMCHS_ARG	Command Argument register	Section 11.7.4
20Ch	MMCHS_CMD	Command and Transfer Mode register	Section 11.7.5
210h	MMCHS_RSP10	Command Response[31:0] register	Section 11.7.6
214h	MMCHS_RSP32	Command Response[63:32] register	Section 11.7.7
218h	MMCHS_RSP54	Command Response[95:64] register	Section 11.7.8
21Ch	MMCHS_RSP76	Command Response[127:96] register	Section 11.7.9
220h	MMCHS_DATA	Data register	Section 11.7.10
224h	MMCHS_PSTATE	Present State register	Section 11.7.11
228h	MMCHS_HCTL	Control register	Section 11.7.12
22Ch	MMCHS_SYSCTL	SD System Control register	Section 11.7.13
230h	MMCHS_STAT	Interrupt Status register	Section 11.7.14
234h	MMCHS_IE	Interrupt SD Enable register	Section 11.7.15
238h	MMCHS_ISE	Interrupt Signal Enable register	Section 11.7.16

Copyright © 2017, Texas Instruments Incorporated

11.7.1 MMCHS_CSRE Register (Offset = 124h) [reset = 0h]

Card Status Response Error register

MMCHS_CSRE is shown in Figure 11-2 and described in Table 11-5.

Return to Summary Table.

This register enables the host controller to detect card status errors of response type R1, R1b for all cards and of R5, R5b and R6 response for cards types SD or SDIO.

When a bit MMCi.MMCHS_CSRE[I] is set to 1, if the corresponding bit at the same position in the response MMCi.MMCHS_RSP10[I] is set to 1, the host controller indicates a card error (MMCi.MMCHS_STAT[28] CERR bit) interrupt status to avoid the host driver reading the response register (MMCi.MMCHS_RSP10). Note: No automatic card error detection for autoCMD12 is implemented; the host system must check autoCMD12 response register (MMCi.MMCHS_RSP76) for possible card errors.

Figure 11-2. MMCHS_CSRE Register

31	30	29	28	27	26	25	24	23	22	21	20	19	18	17	16	15	14	13	12	11	10	9	8	7	6	5	4	3	2	1	0
CSRE																															
R/W-0h																															

LEGEND: R/W = Read/Write; R = Read only; W1toCl = Write 1 to clear bit; *-n* = value after reset

Table 11-5. MMCHS_CSRE Register Field Descriptions

Bit	Field	Type	Reset	Description
31-0	CSRE	R/W	0h	Card status response error

Copyright © 2017, Texas Instruments Incorporated

11.7.2 MMCHS_CON Register (Offset = 12Ch) [reset = 0h]

Configuration register

MMCHS_CON is shown in Figure 11-3 and described in Table 11-6.

Return to Summary Table.

This register is used:

- To select the functional mode for any card
- To send an initialization sequence to any card
- To enable the detection on the mmci_dat[1] signal of a card interrupt for SDIO cards only
- To configure specific data and command transfers for MMC cards only
- To configure the parameters related to the card detect and write protect input signals.

Figure 11-3. MMCHS_CON Register

31	30	29	28	27	26	25	24
RESERVED							
R-0h							
23	22	21	20	19	18	17	16
RESERVED							
R-0h							
15	14	13	12	11	10	9	8
RESERVED							
R-0h							
7	6	5	4	3	2	1	0
RESERVED					HR	INIT	RESERVED
R-0h					R/W-0h	R/W-0h	R-0h

LEGEND: R/W = Read/Write; R = Read only; W1toCl = Write 1 to clear bit; *-n* = value after reset

Table 11-6. MMCHS_CON Register Field Descriptions

Bit	Field	Type	Reset	Description
31-3	RESERVED	R	0h	
2	HR	R/W	0h	Broadcast host response (only for MMC cards) This register is used to force the host to generate a 48-bit response for bc command type. It can be used to terminate the interrupt mode by generating a CMD40 response by the core. To have the host response to be generated in open drain mode, the register MMCHS_CON[OD] must be set to 1. When MMCi.MMCHS_CON[12] CEATA bit is set to 1 and MMCi.MMCHS_ARG set to 0x00000000, when writing 0x00000000 into MMCi.MMCHS_CMD register, the host controller performs a 'command completion signal disable' token (such as mmci_cmd line held to 0 during 47 cycles followed by a 1).

Copyright © 2017, Texas Instruments Incorporated

Table 11-6. MMCHS_CON Register Field Descriptions (continued)

Bit	Field	Type	Reset	Description
1	INIT	R/W	0h	Send initialization stream (all cards) When this bit is set to 1, and the card is idle, an initialization sequence is sent to the card. An initialization sequence consists of setting the mmci_cmd line to 1 during 80 clock cycles. The initialization sequence is mandatory - but it is not required to do it through this bit - this bit makes it easier. Clock divider (MMCi.MMCHS_SYSCTL[15:6] CLKD bits) should be set to ensure that 80 clock periods are greater than 1ms. Note: in this mode, there is no command sent to the card and no response is expected. A command complete interrupt will be generated once the initialization sequence is completed. MMCi.MMCHS_STAT[0] CC bit can be polled. 0h = The host does not send an initialization sequence. 1h = The host sends an initialization sequence.
0	RESERVED	R	0h	

Copyright © 2017, Texas Instruments Incorporated

11.7.3 MMCHS_BLK Register (Offset = 204h) [reset = 0h]

Transfer Length Configuration register

MMCHS_BLK is shown in Figure 11-4 and described in Table 11-7.

Return to Summary Table.

This register shall be used for any card.

Figure 11-4. MMCHS_BLK Register

31	30	29	28	27	26	25	24	23	22	21	20	19	18	17	16
NBLK															
R/W-0h															
15	14	13	12	11	10	9	8	7	6	5	4	3	2	1	0
RESERVED					BLEN										
R-0h					R/W-0h										

LEGEND: R/W = Read/Write; R = Read only; W1toCl = Write 1 to clear bit; *-n* = value after reset

Table 11-7. MMCHS_BLK Register Field Descriptions

Bit	Field	Type	Reset	Description
31-16	NBLK	R/W	0h	Blocks count for current transfer This register is enabled when the Block count Enable (MMCi.MMCHS_CMD[1] BCE bit) is set to 1 and is valid only for multiple block transfers. Setting the block count to 0 results no data blocks being transferred. Note: The host controller decrements the block count after each block transfer and stops when the count reaches zero. This register can be accessed only if no transaction is executing (such as after a transaction has stopped). Read operations during transfers may return an invalid value and write operation will be ignored. In suspend context, the number of blocks yet to be transferred can be determined by reading this register. When restoring transfer context prior to issuing a Resume command, The local host shall restore the previously saved block count. 0h = Stop count 1h = 1 block 2h = 2 blocks FFFFh = 65535 blocks
15-11	RESERVED	R	0h	
10-0	BLEN	R/W	0h	Transfer Block Size This register specifies the block size for block data transfers. Read operations during transfers may return an invalid value, and write operations are ignored. When a CMD12 command is issued to stop the transfer, a read of the BLEN field after transfer completion (MMCi.MMCHS_STAT[1] TC bit set to 1) will not return the true byte number of data length while the stop occurs but the value written in this register before transfer is launched. 0h = No data transfer 1h = 1 byte block length 2h = 2 bytes block length 3h = 3 bytes block length 1FFh = 511 bytes block length 200h = 512 bytes block length 3FFh = 1023 bytes block length 400h = 1024 bytes block length

Copyright © 2017, Texas Instruments Incorporated

11.7.4 MMCHS_ARG Register (Offset = 208h) [reset = 0h]

Command Argument register

MMCHS_ARG is shown in Figure 11-5 and described in Table 11-8.

Return to Summary Table.

This register contains a command argument specified as bit 39-8 of Command-Format.

These registers must be initialized prior to sending the command to the card (write action into the register MMCi.MMCHS_CMD register). The only exception is for a command index specifying stuff bits in arguments, making a write unnecessary.

Figure 11-5. MMCHS_ARG Register

31	30	29	28	27	26	25	24	23	22	21	20	19	18	17	16	15	14	13	12	11	10	9	8	7	6	5	4	3	2	1	0
ARG																															
R/W-0h																															

LEGEND: R/W = Read/Write; R = Read only; W1toCl = Write 1 to clear bit; *-n* = value after reset

Table 11-8. MMCHS_ARG Register Field Descriptions

Bit	Field	Type	Reset	Description
31-0	ARG	R/W	0h	Command argument bits [31:0] For CMD52, ARG must be programmed with IO_RW_DIRECT[39:8]. Refer to SDIO specification.

Copyright © 2017, Texas Instruments Incorporated

11.7.5 MMCHS_CMD Register (Offset = 20Ch) [reset = 0h]

Command and Transfer Mode register

MMCHS_CMD is shown in Figure 11-6 and described in Table 11-9.

Return to Summary Table.

MMCi.MMCHS_CMD[31:16] = the command register

MMCi.MMCHS_CMD[15:0] = the transfer mode.

This register configures the data and command transfers. A write into the most significant byte send the command. A write into MMCi.MMCHS_CMD[15:0] registers during data transfer has no effect. This register shall be used for any card.

Figure 11-6. MMCHS_CMD Register

31	30	29	28	27	26	25	24
RESERVED		INDX					
R-0h		R/W-0h					
23	22	21	20	19	18	17	16
CMD_TYPE		DP	CICE	CCCE	RESERVED	RSP_TYPE	
R/W-0h		R/W-0h	R/W-0h	R/W-0h	R-0h	R/W-0h	
15	14	13	12	11	10	9	8
RESERVED							
R-0h							
7	6	5	4	3	2	1	0
RESERVED		MSBS	DDIR	RESERVED		BCE	DE
R-0h		R/W-0h	R/W-0h	R-0h		R/W-0h	R/W-0h

LEGEND: R/W = Read/Write; R = Read only; W1toCl = Write 1 to clear bit; *-n* = value after reset

Table 11-9. MMCHS_CMD Register Field Descriptions

Bit	Field	Type	Reset	Description
31-30	RESERVED	R	0h	
29-24	INDX	R/W	0h	Command index Binary-encoded value from 0 to 63, specifying the command number send to card. 0h = CMD0 or ACMD0 1h = CMD1 or ACMD1 3Fh = CMD63 or ACMD63
23-22	CMD_TYPE	R/W	0h	Command type This register specifies three types of special commands: Suspend, Resume, and Abort. These bits shall be set to 0b00 for all other commands. 0h = Other commands 1h = Upon CMD52 Bus Suspend operation 2h = Upon CMD52 Function Select operation 3h = Upon CMD12 or CMD52 I/O Abort command
21	DP	R/W	0h	Data present select This register indicates that data is present, and mmci_dat line shall be used. It must be set to 0 in the following conditions: Command using only mmci_cmd line Command with no data transfer, but using busy signal on mmci_dat[0] Resume command 0h = Command with no data transfer 1h = Command with data transfer

Copyright © 2017, Texas Instruments Incorporated

Table 11-9. MMCHS_CMD Register Field Descriptions (continued)

Bit	Field	Type	Reset	Description
20	CICE	R/W	0h	Command Index check enable This bit must be set to 1 to enable index check on command response to compare the index field in the response against the index of the command. If the index is not the same in the response as in the command, it is reported as a command index error (MMCi.MMCHS_STAT[19] CIE bit set to1) Note: The CICE bit cannot be configured for an Auto CMD12, then index check is automatically checked when this command is issued. 0h = Index check disable 1h = Index check enable
19	CCCE	R/W	0h	Command CRC check enable This bit must be set to 1 to enable CRC7 check on command response to protect the response against transmission errors on the bus. If an error is detected, it is reported as a command CRC error (MMCi.MMCHS_STAT[17] CCRC bit set to 1). Note: The CCCE bit cannot be configured for an Auto CMD12, and then CRC check is automatically checked when this command is issued. 0h = CRC7 check disable 1h = CRC7 check enable
18	RESERVED	R	0h	
17-16	RSP_TYPE	R/W	0h	Response type These bits define the response type of the command. 0h = No response 1h = Response Length 136 bits 2h = Response Length 48 bits 3h = Response Length 48 bits with busy after response
15-6	RESERVED	R	0h	
5	MSBS	R/W	0h	Multi/Single block select This bit must be set to 1 for data transfer in case of multi-block command. For any others command, this bit is set to 0. 0h = Single block. If this bit is 0, it is not necessary to set the register MMCi.MMCHS_BLK[31:16] NBLK bits. 1h = Multi-block. When Block Count is disabled (MMCi.MMCHS_CMD[1] BCE bit is set to 0) in Multiple block transfers (MMCi.MMCHS_CMD[5] MSBS bit is set to 1), the module can perform infinite transfer.
4	DDIR	R/W	0h	Data transfer direction This bit defines whether either data transfer is a read or a write. 0h = Data Write (host to card) 1h = Data Read (card to host)
3-2	RESERVED	R	0h	
1	BCE	R/W	0h	Block Count Enable (multiple block transfers only) This bit is used to enable the block count register (MMCHS_BLK[31:16] NBLK bits). When Block Count is disabled (MMCHS_CMD[1] BCE bit is set to 0) in multiple block transfers (MMCHS_CMD[5] MSBS bits is set to 1), the module can perform infinite transfer. 0h = Block count disabled for infinite transfer 1h = Block count enabled for multiple block transfer with known number of blocks
0	DE	R/W	0h	DMA enable This bit is used to enable DMA mode for host data access. 0h = DMA mode disable 1h = DMA mode enable

Copyright © 2017, Texas Instruments Incorporated

11.7.6 MMCHS_RSP10 Register (Offset = 210h) [reset = 0h]

Command Response[31:0] register

MMCHS_RSP10 is shown in Figure 11-7 and described in Table 11-10.

Return to Summary Table.

This 32-bit register holds bits positions [31:0] of command response type R1/R1b/R2/R3/R4/R5/R5b/R6.

Figure 11-7. MMCHS_RSP10 Register

31	30	29	28	27	26	25	24	23	22	21	20	19	18	17	16	15	14	13	12	11	10	9	8	7	6	5	4	3	2	1	0
RSP1																RSP0															
R-0h																R-0h															

LEGEND: R/W = Read/Write; R = Read only; W1toCl = Write 1 to clear bit; *-n* = value after reset

Table 11-10. MMCHS_RSP10 Register Field Descriptions

Bit	Field	Type	Reset	Description
31-16	RSP1	R	0h	R1/R1b (normal response) /R3/R4/R5/R5b/R6 : Command Response [39:24] R2: Command Response [31:16]
15-0	RSP0	R	0h	R1/R1b (normal response) /R3/R4/R5/R5b/R6 : Command Response [23:8] R2: Command Response [15:0]

Copyright © 2017, Texas Instruments Incorporated

11.7.7 MMCHS_RSP32 Register (Offset = 214h) [reset = 0h]

Command Response[63:32] register

MMCHS_RSP32 is shown in Figure 11-8 and described in Table 11-11.

Return to Summary Table.

This 32-bit register holds bits positions [63:32] of command response type R2.

Figure 11-8. MMCHS_RSP32 Register

31	30	29	28	27	26	25	24	23	22	21	20	19	18	17	16	15	14	13	12	11	10	9	8	7	6	5	4	3	2	1	0
RSP3																RSP2															
R-0h																R-0h															

LEGEND: R/W = Read/Write; R = Read only; W1toCl = Write 1 to clear bit; *-n* = value after reset

Table 11-11. MMCHS_RSP32 Register Field Descriptions

Bit	Field	Type	Reset	Description
31-16	RSP3	R	0h	R2: Command Response [63:48]
15-0	RSP2	R	0h	R2: Command Response [47:32]

Copyright © 2017, Texas Instruments Incorporated

11.7.8 MMCHS_RSP54 Register (Offset = 218h) [reset = 0h]

Command Response[95:64] register

MMCHS_RSP54 is shown in Figure 11-9 and described in Table 11-12.

Return to Summary Table.

This 32-bit register holds bits positions [95:64] of command response type R2.

Figure 11-9. MMCHS_RSP54 Register

31	30	29	28	27	26	25	24	23	22	21	20	19	18	17	16	15	14	13	12	11	10	9	8	7	6	5	4	3	2	1	0
RSP5																RSP4															
R-0h																R-0h															

LEGEND: R/W = Read/Write; R = Read only; W1toCl = Write 1 to clear bit; *-n* = value after reset

Table 11-12. MMCHS_RSP54 Register Field Descriptions

Bit	Field	Type	Reset	Description
31-16	RSP5	R	0h	R2: Command Response [95:80]
15-0	RSP4	R	0h	R2: Command Response [79:64]

Copyright © 2017, Texas Instruments Incorporated

11.7.9 MMCHS_RSP76 Register (Offset = 21Ch) [reset = 0h]

Command Response[127:96] register

MMCHS_RSP76 is shown in Figure 11-10 and described in Table 11-13.

Return to Summary Table.

This 32-bit register holds bits positions [127:96] of command response type R2.

Figure 11-10. MMCHS_RSP76 Register

31	30	29	28	27	26	25	24	23	22	21	20	19	18	17	16	15	14	13	12	11	10	9	8	7	6	5	4	3	2	1	0
RSP7																RSP6															
R-0h																R-0h															

LEGEND: R/W = Read/Write; R = Read only; W1toCl = Write 1 to clear bit; *-n* = value after reset

Table 11-13. MMCHS_RSP76 Register Field Descriptions

Bit	Field	Type	Reset	Description
31-16	RSP7	R	0h	R1b (Auto CMD12 response): Command Response [39:24] R2: Command Response [127:112]
15-0	RSP6	R	0h	R1b (Auto CMD12 response): Command Response [23:8] R2: Command Response [111:96]

Copyright © 2017, Texas Instruments Incorporated

11.7.10 MMCHS_DATA Register (Offset = 220h) [reset = 0h]

Data register

MMCHS_DATA is shown in Figure 11-11 and described in Table 11-14.

Return to Summary Table.

This register is the 32-bit entry point of the buffer for read or write data transfers.

The buffer size is 32 bits × 256 (1024 bytes). Bytes within a word are stored and read in little endian format. This buffer can be used as two 512-byte buffers to transfer data efficiently without reducing the throughput. Sequential and contiguous access is necessary to increment the pointer correctly. Random or skipped access is not allowed. In little endian, if the local host accesses this register byte-wise or 16-bit-wise, the least significant byte (bits [7:0]) must always be written or read first. The update of the buffer address is done on the most significant byte write for full 32-bit DATA register, or on the most significant byte of the last word of block transfer.

Example 1: Byte or 16-bit access

Mbyteen[3:0]=0001 (1-byte) => Mbyteen[3:0]=0010 (1-byte) => Mbyteen[3:0]=1100 (2-bytes) OK

Mbyteen[3:0]=0001 (1-byte) => Mbyteen[3:0]=0010 (1-byte) => Mbyteen[3:0]=0100 (1-byte) OK

Mbyteen[3:0]=0001 (1-byte) => Mbyteen[3:0]=0010 (1-byte) => Mbyteen[3:0]=1000 (1-byte) Bad

Figure 11-11. MMCHS_DATA Register

31	30	29	28	27	26	25	24	23	22	21	20	19	18	17	16	15	14	13	12	11	10	9	8	7	6	5	4	3	2	1	0
DATA																															
R/W-0h																															

LEGEND: R/W = Read/Write; R = Read only; W1toCl = Write 1 to clear bit; *-n* = value after reset

Table 11-14. MMCHS_DATA Register Field Descriptions

Bit	Field	Type	Reset	Description
31-0	DATA	R/W	0h	Data Register [31:0] In functional mode (MMCI.MMCHS_CON[4] MODE bit set to the default value 0): A read access to this register is allowed only when the buffer read enable status is set to 1 (MMCi.MMCHS_PSTATE[11] BRE bit), otherwise a bad access (MMCi.MMCHS_STAT[29] BADA bit) is signaled. A write access to this register is allowed only when the buffer write enable status is set to 1 (MMCi.MMCHS_PSTATE[10] BWE bit), otherwise a bad access (MMCi.MMCHS_STAT[29] BADA bit) is signaled and the data is not written.

Copyright © 2017, Texas Instruments Incorporated

11.7.11 MMCHS_PSTATE Register (Offset = 224h) [reset = 0h]

Present State register

MMCHS_PSTATE is shown in Figure 11-12 and described in Table 11-15.

Return to Summary Table.

The host can get status of the host controller from this 32-bit read-only register.

Figure 11-12. MMCHS_PSTATE Register

31	30	29	28	27	26	25	24
RESERVED							
R-0h							
23	22	21	20	19	18	17	16
RESERVED							
R-0h							
15	14	13	12	11	10	9	8
RESERVED				BRE	BWE	RTA	WTA
R-0h				R-0h	R-0h	R-0h	R-0h
7	6	5	4	3	2	1	0
RESERVED					DLA	DAT1	CMDI
R-0h					R-0h	R-0h	R-0h

LEGEND: R/W = Read/Write; R = Read only; W1toCl = Write 1 to clear bit; -*n* = value after reset

Table 11-15. MMCHS_PSTATE Register Field Descriptions

Bit	Field	Type	Reset	Description
31-12	RESERVED	R	0h	
11	BRE	R	0h	Buffer read enable This bit is used for non-DMA read transfers. It indicates that a complete block specified by MMCi.MMCHS_BLK[10:0] BLEN bits has been written in the buffer and is ready to be read. It is set to 0 when the entire block is read from the buffer. It is set to 1 when a block data is ready in the buffer and generates the Buffer read ready status of interrupt (MMCi.MMCHS_STAT[5] BRR bit). 0h = Read BLEN bytes disable 1h = Read BLEN bytes enable. Readable data exists in the buffer.
10	BWE	R	0h	Buffer Write enable This status is used for non-DMA write transfers. It indicates if space is available for write data. 0h = There is no room left in the buffer to write BLEN bytes of data. 1h = There is enough space in the buffer to write BLEN bytes of data.
9	RTA	R	0h	Read transfer active This status is used for detecting completion of a read transfer. It is set to 1 after the end bit of read command or by activating a continue request (MMCi.MMCHS_HCTL[17] CR bit) following a stop at block gap request. This bit is set to 0 when all data have been read by the local host after last block or after a stop at block gap request. 0h = No valid data on the mmci_dat lines 1h = Read data transfer ongoing

Copyright © 2017, Texas Instruments Incorporated

Table 11-15. MMCHS_PSTATE Register Field Descriptions (continued)

Bit	Field	Type	Reset	Description
8	WTA	R	0h	Write transfer active This status indicates a write transfer active. It is set to 1 after the end bit of write command or by activating a continue request (MMCi.MMCHS_HCTL[17] CR bit) following a stop at block gap request. This bit is set to 0 when CRC status has been received after last block or after a stop at block gap request. 0h = No valid data on the mmci_dat lines 1h = Write data transfer ongoing
7-3	RESERVED	R	0h	
2	DLA	R	0h	mmci_dat line active This status bit indicates whether one of the mmci_dat line is in use. In the case of read transactions (card to host): This bit is set to 1 after the end bit of read command or by activating continue request MMCi.MMCHS_HCTL[17] CR bit. This bit is set to 0 when the host controller received the end bit of the last data block or at the beginning of the read wait mode. In the case of write transactions (host to card): This bit is set to 1 after the end bit of write command or by activating continue request MMCi.MMCHS_HCTL[17] CR bit. This bit is set to 0 on the end of busy event for the last block; host controller must wait 8 clock cycles with line not busy to really consider not "busy state" or after the busy block as a result of a stop at gap request. 0h = mmci_dat Line inactive 1h = mmci_dat Line active
1	DAT1	R	0h	Command inhibit (mmci_dat) This status bit is generated if either mmci_dat line is active (MMCi.MMCHS_PSTATE[2] DLA bit) or Read transfer is active (MMCi.MMCHS_PSTATE[9] RTA bit) or when a command with busy is issued. This bit prevents the local host to issue a command. A change of this bit from 1 to 0 generates a transfer complete interrupt (MMCi.MMCHS_STAT[1] TC bit). 0h = Issuing of command using the mmci_dat lines is allowed 1h = Issuing of command using the mmci_dat lines is not allowed
0	CMDI	R	0h	Command inhibit(mmci_cmd) This status bit indicates that the mmci_cmd line is in use. This bit is set to 0 when the most significant byte is written into the command register. This bit is not set when Auto CMD12 is transmitted. This bit is set to 0 in either the following cases: After the end bit of the command response, excepted if there is a command conflict error (MMCi.MMCHS_STAT[17] CCRC bit or MMCi.MMCHS_STAT[18] CEB bit set to 1) or a Auto CMD12 is not executed (MMCi.MMCHS_AC12[0] ACNE bit). After the end bit of the command without response (MMCi.MMCHS_CMD[17:16] RSP_TYPE bits set to "00"). In case of a command data error is detected (MMCi.MMCHS_STAT[19] CTO bit set to 1), this register is not automatically cleared. 0h = Issuing of command using mmci_cmd line is allowed 1h = Issuing of command using mmci_cmd line is not allowed

Copyright © 2017, Texas Instruments Incorporated

11.7.12 MMCHS_HCTL Register (Offset = 228h) [reset = 0h]

Control register

MMCHS_HCTL is shown in Figure 11-13 and described in Table 11-16.

Return to Summary Table.

This register defines the host controls to set power, wakeup, and transfer parameters.

MMCi.MMCHS_HCTL[31:24] = Wakeup control

MMCi.MMCHS_HCTL[23:16] = Block gap control

MMCi.MMCHS_HCTL[15:8] = Power control

MMCi.MMCHS_HCTL[7:0] = Host control

Figure 11-13. MMCHS_HCTL Register

31	30	29	28	27	26	25	24	23	22	21	20	19	18	17	16
RESERVED															
R-0h															
15	14	13	12	11	10	9	8	7	6	5	4	3	2	1	0
RESERVED				SDVS			RESERVED								
R-0h				R/W-0h			R-0h								

LEGEND: R/W = Read/Write; R = Read only; W1toCl = Write 1 to clear bit; *-n* = value after reset

Table 11-16. MMCHS_HCTL Register Field Descriptions

Bit	Field	Type	Reset	Description
31-12	RESERVED	R	0h	
11-9	SDVS	R/W	0h	SD bus voltage select (all cards) The host driver should set these bits to select the voltage level for the card, according to the voltage supported by the system (MMCi.MMCHS_CAPA[26] VS18 bit, MMCi.MMCHS_CAPA[25] VS30 bit, MMCi.MMCHS_CAPA[24] VS33 bit) before starting a transfer. 5h = 1.8 V (typical) 6h = 3.0 V (typical) 7h = 3.3 V (typical) MMCHS2: This field must be set to 0x5 MMCHS3: This field must be set to 0x5
8-0	RESERVED	R	0h	

Copyright © 2017, Texas Instruments Incorporated

11.7.13 MMCHS_SYSCTL Register (Offset = 22Ch) [reset = 0h]

SD System Control register

MMCHS_SYSCTL is shown in Figure 11-14 and described in Table 11-17.

Return to Summary Table.

This register defines the system controls to set software resets, clock frequency management, and data timeout.

MMCHS_SYSCTL[31:24] = Software resets

MMCHS_SYSCTL[23:16] = Timeout control

MMCHS_SYSCTL[15:0] = Clock control

Figure 11-14. MMCHS_SYSCTL Register

31	30	29	28	27	26	25	24	23	22	21	20	19	18	17	16
RESERVED					SRD	SRC	SRA	RESERVED				DTO			
R-0h					R/W-0h	R/W-0h	R/W-0h	R-0h				R/W-0h			
15	14	13	12	11	10	9	8	7	6	5	4	3	2	1	0
CLKD										RESERVED			CEN	ICS	ICE
R/W-0h										R-0h			R/W-0h	R-0h	R/W-0h

LEGEND: R/W = Read/Write; R = Read only; W1toCl = Write 1 to clear bit; *-n* = value after reset

Table 11-17. MMCHS_SYSCTL Register Field Descriptions

Bit	Field	Type	Reset	Description
31-27	RESERVED	R	0h	
26	SRD	R/W	0h	Software reset for mmci_dat line This bit is set to 1 for reset and released to 0 when completed .mmci_dat finite state machine in both clock domain are also reset. These registers are cleared by the MMCHS_SYSCTL[26] SRD bit: MMCi.MMCHS_DATA MMCi.MMCHS_PSTATE: BRE, BWE, RTA, WTA, DLA and DATI MMCi.MMCHS_HCTL: SBGR and CR MMCi.MMCHS_STAT: BRR, BWR, BGE and TC Interconnect and MMC buffer data management is reinitialized. 0h = Reset completed 1h = Software reset for mmci_dat line
25	SRC	R/W	0h	Software reset for mmci_cmd line This bit is set to 1 for reset and released to 0 when completed. mmci_cmd finite state machine in both clock domain are also reset. These are the registers cleared by the MMCi.MMCHS_SYSCTL[25] SRC bit: MMCi.MMCHS_PSTATE: CMDI MMCi.MMCHS_STAT: CC Interconnect and MMC command status management is reinitialized. 0h = Reset completed 1h = Software reset for mmci_dat line
24	SRA	R/W	0h	Software reset for all This bit is set to 1 for reset , and released to 0 when RW 0 completed. This reset affects the entire host controller except for the card detection circuit and capabilities registers. 0h = Reset completed 1h = Software reset for all the designs
23-20	RESERVED	R	0h	

Copyright © 2017, Texas Instruments Incorporated

Table 11-17. MMCHS_SYSCTL Register Field Descriptions (continued)

Bit	Field	Type	Reset	Description
19-16	DTO	R/W	0h	Data timeout counter value and busy timeout The host driver needs to set this bit field based on • the maximum read access time (NAC) (refer to the SD Specification Part1 Physical Layer) • the data read access time values (TAAC and NSAC) in the card-specific data register (CSD) of the card • the timeout clock base frequency (MMCi.MMCHS_CAPA[5:0] TCF bits) If the card does not respond within the specified number of cycles, a data timeout error occurs (MMCi.MMCHS_STAT[20] DTO bit). The MMCi.MMCHS_SYSCTL[19,16] DTO bitfield is also used to check busy duration, to generate busy timeout for commands with busy response or for busy programming during a write command. Timeout on CRC status is generated if no CRC token is present after a block write. 0h = TCF × 2^{13} 1h = TCF × 2^{14} Eh = TCF × 2^{27} Fh = Reserved
15-6	CLKD	R/W	0h	Clock frequency select These bits define the ratio between a reference RW 0x000 clock frequency (system-dependant) and the output clock frequency on the mmci_clk pin of either the memory card (MMC, SD or SDIO). 0h = Clock Ref bypass 1h = Clock Ref bypass 2h = Clock Ref / 2 3h = Clock Ref / 3 3FFh = Clock Ref / 1023
5-3	RESERVED	R	0h	
2	CEN	R/W	0h	Clock enable This bit controls whether the clock is provided to the card or not. 0h = The clock is not provided to the card. Clock frequency can be changed. 1h = The clock is provided to the card and can be automatically gated when MMCi.MMCHS_SYSCONFIG[0] AUTOIDLE bit is set to 1 (default value). The host driver waits to set this bit to 1 until the internal clock is stable (MMCi.MMCHS_SYSCTL[1] ICS bit).
1	ICS	R	0h	Internal clock stable (status) This bit indicates either the internal clock is stable or not. 0h = The internal clock is not stable 1h = The internal clock is stable after enabling the clock (MMCi.MMCHS_SYSCTL[0] ICE bit) or after changing the clock ratio (MMCi.MMCHS_SYSCTL[15:6] CLKD bits).
0	ICE	R/W	0h	Internal clock enable This register controls the internal clock activity. In a very low-power state, the internal clock is stopped. Note: The activity of the debounce clock (used for wakeup events) and the interface clock (used for reads and writes to the module register map) are not affected by this register. 0h = The internal clock is stopped (very low power state). 1h = The internal clock oscillates and can be automatically gated when MMCi.MMCHS_SYSCONFIG[0] AUTOIDLE bit is set to 1 (default value).

Copyright © 2017, Texas Instruments Incorporated

11.7.14 MMCHS_STAT Register (Offset = 230h) [reset = 0h]

Interrupt Status register

MMCHS_STAT is shown in Figure 11-15 and described in Table 11-18.

Return to Summary Table.

The interrupt status regroups all the status of the module internal events that can generate an interrupt.

MMCHS_STAT[31:16] = Error Interrupt Status

MMCHS_STAT[15:0] = Normal Interrupt Status

Figure 11-15. MMCHS_STAT Register

31	30	29	28	27	26	25	24
RESERVED		BADA	CERR	RESERVED			
R-0h		R/W-0h	R/W-0h	R-0h			
23	22	21	20	19	18	17	16
RESERVED	DEB	DCRC	DTO	RESERVED	CEB	CCRC	CTO
R-0h	R/W-0h	R/W-0h	R/W-0h	R-0h	R/W-0h	R/W-0h	R/W-0h
15	14	13	12	11	10	9	8
ERRI	RESERVED						
R-0h	R-0h						
7	6	5	4	3	2	1	0
RESERVED		BRR	BWR	RESERVED		TC	CC
R-0h		R/W-0h	R/W-0h	R-0h		R/W-0h	R/W-0h

LEGEND: R/W = Read/Write; R = Read only; W1toCl = Write 1 to clear bit; *-n* = value after reset

Table 11-18. MMCHS_STAT Register Field Descriptions

Bit	Field	Type	Reset	Description
31-30	RESERVED	R	0h	
29	BADA	R/W	0h	Bad access to data space This bit is set automatically to indicate a bad access to buffer when not allowed: During a read access to the data register (MMCi.MMCHS_DATA) while buffer reads are not allowed (MMCi.MMCHS_PSTATE[11] BRE bit =0) During a write access to the data register (MMCi.MMCHS_DATA) while buffer writes are not allowed (MMCi.MMCHS_PSTATE[10] BWE bit=0) Read 0h = No interrupt Write 0h = Status bit unchanged Read 1h = Bad access Write 1h = Status is cleared
28	CERR	R/W	0h	Card error This bit is set automatically when there is at least one error in a response of type R1, R1b, R6, R5, or R5b. Only bits referenced as type E (error) in the status field in the response can set a card status error. An error bit in the response is flagged only if corresponding bit in card status response error MMCi.MMCHS_CSRE in set. There is no card error detection for the autoCMD12 command. The host driver reads MMCi.MMCHS_RSP76 register to detect error bits in the command response. Read 0h = No error Write 0h = Status bit unchanged Read 1h = Card error Write 1h = Status is cleared
27-23	RESERVED	R	0h	

Copyright © 2017, Texas Instruments Incorporated

Table 11-18. MMCHS_STAT Register Field Descriptions (continued)

Bit	Field	Type	Reset	Description
22	DEB	R/W	0h	Data End Bit error This bit is set automatically when detecting a 0 at the end bit position of read data on mmci_dat line, or at the end position of the CRC status in write mode. Read 0h = No error Write 0h = Status bit unchanged Read 1h = Data end bit error Write 1h = Status is cleared
21	DCRC	R/W	0h	Data CRC error This bit is set automatically when there is a CRC16 error in the data phase response following a block read command, or if there is a 3-bit CRC status different of a position 010 token during a block write command. Read 0h = No error Write 0h = Status bit unchanged Read 1h = Data CRC error Write 1h = Status is cleared
20	DTO	R/W	0h	Data timeout error This bit is set automatically according to the following conditions: • Busy timeout for R1b, R5b response type • Busy timeout after write CRC status • Write CRC status timeout • Read data timeout Read 0h = No error Write 0h = Status bit unchanged Read 1h = Time-out Write 1h = Status is cleared
19	RESERVED	R	0h	
18	CEB	R/W	0h	Command end bit error This bit is set automatically when detecting a 0 at the end bit position of a command response. Read 0h = No error Write 0h = Status bit unchanged Read 1h = Command end bit error Write 1h = Status is cleared
17	CCRC	R/W	0h	Command CRC error This bit is set automatically when there is a CRC7 error in the command response, depending on the enable bit (MMCi.MMCHS_CMD[19] CCCE). Read 0h = No error Write 0h = Status bit unchanged Read 1h = Command CRC error Write 1h = Status is cleared
16	CTO	R/W	0h	Command time-out error This bit is set automatically when no response is received within 64 clock cycles from the end bit of the command. For commands that reply within 5 clock cycles, the time-out is still detected at 64 clock cycles. Read 0h = No error Write 0h = Status bit unchanged Read 1h = Time-out Write 1h = Status is cleared

Copyright © 2017, Texas Instruments Incorporated

Table 11-18. MMCHS_STAT Register Field Descriptions (continued)

Bit	Field	Type	Reset	Description
15	ERRI	R	0h	Error Interrupt If any of the bits in the Error Interrupt Status register (MMCi.MMCHS_STAT[31:16]) are set, then this bit is set to 1. Therefore, the host driver can efficiently test for an error by checking this bit first. Writes to this bit are ignored. 0h = No interrupt 1h = Error interrupt events occurred
14-6	RESERVED	R	0h	
5	BRR	R/W	0h	Buffer read ready This bit is set automatically during a read operation to the card (see class 2 - block oriented read commands) when one block specified by the MMCi.MMCHS_BLK[10:0] BLEN bitfield is completely written in the buffer. It indicates that the memory card has filled out the buffer and that the local host needs to empty the buffer by reading it. Note: If the DMA receive-mode is enabled, this bit is never set; instead, a DMA receive request to the main DMA controller of the system is generated. Read 0h = No error Write 0h = Status bit unchanged Read 1h = Ready to read buffer Write 1h = Status is cleared
4	BWR	R/W	0h	Buffer write ready This bit is set automatically during a write operation to the card (see class 4 - block oriented write command) when the host can write a complete block as specified by MMCi.MMCHS_BLK[10:0] BLEN. It indicates that the memory card has emptied one block from the buffer and that the local host is able to write one block of data into the buffer. Note: If the DMA transmit mode is enabled, this bit is never set; instead, a DMA transmit request to the main DMA controller of the system is generated. Read 0h = No error Write 0h = Status bit unchanged Read 1h = Ready to write buffer Write 1h = Status is cleared
3-2	RESERVED	R	0h	
1	TC	R/W	0h	Transfer completed This bit is always set when a read/write transfer is completed or between two blocks when the transfer is stopped due to a stop at block gap request (MMCi.MMCHS_HCTL[16] SBGR bit). This bit is also set when exiting a command in a busy state (if the command has a busy notification capability). In read mode: This bit is automatically set on completion of a read transfer (MMCi.MMCHS_PSTATE[9] RTA bit). In write mode: This bit is set automatically on completion of the mmci_dat line use (MMCi.MMCHS_PSTATE[2] DLA bit). Read 0h = No transfer complete Write 0h = Status bit unchanged Read 1h = Data transfer complete Write 1h = Status is cleared

Copyright © 2017, Texas Instruments Incorporated

Table 11-18. MMCHS_STAT Register Field Descriptions (continued)

Bit	Field	Type	Reset	Description
0	CC	R/W	0h	Command complete This bit is set when a 1-to-0 transition occurs in the register command inhibit (MMCi.MMCHS_PSTATE[0] CMDI bit) If the command is a type for which no response is expected, then the command complete interrupt is generated at the end of the command. A command timeout error (MMCi.MMCHS_STAT[16] CTO bit) has higher priority than command complete (MMCi.MMCHS_STAT[0] CC bit). If a response is expected but none is received, then a command time-out error is detected and signaled instead of the command complete interrupt. Read 0h = No command complete Write 0h = Status bit unchanged Read 1h = Command complete Write 1h = Status is cleared

Copyright © 2017, Texas Instruments Incorporated

11.7.15 MMCHS_IE Register (Offset = 234h) [reset = 0h]

Interrupt SD Enable register

MMCHS_IE is shown in Figure 11-16 and described in Table 11-19.

Return to Summary Table.

This register allows to enable or disable the module to set status bits, on an event-by-event basis.

MMCHS_IE[31:16] = Error Interrupt Status Enable

MMCHS_IE[15:0] = Normal Interrupt Status Enable

Figure 11-16. MMCHS_IE Register

31	30	29	28	27	26	25	24
RESERVED		BADA_ENABLE	CERR_ENABLE	RESERVED			
R-0h		R/W-0h	R/W-0h	R-0h			
23	22	21	20	19	18	17	16
RESERVED	DEB_ENABLE	DCRC_ENABLE	DTO_ENABLE	RESERVED	CEB_ENABLE	RESERVED	CTO_ENABLE
R-0h	R/W-0h	R/W-0h	R/W-0h	R-0h	R/W-0h	R-0h	R/W-0h
15	14	13	12	11	10	9	8
NULL	RESERVED						
R-0h	R-0h						
7	6	5	4	3	2	1	0
RESERVED		BRR_ENABLE	BWR_ENABLE	RESERVED		TC_ENABLE	CC_ENABLE
R-0h		R/W-0h	R/W-0h	R-0h		R/W-0h	R/W-0h

LEGEND: R/W = Read/Write; R = Read only; W1toCl = Write 1 to clear bit; *-n* = value after reset

Table 11-19. MMCHS_IE Register Field Descriptions

Bit	Field	Type	Reset	Description
31-30	RESERVED	R	0h	
29	BADA_ENABLE	R/W	0h	Bad access to data space interrupt enable 0h = Masked 1h = Enabled
28	CERR_ENABLE	R/W	0h	Card error interrupt enable 0h = Masked 1h = Enabled
27-23	RESERVED	R	0h	
22	DEB_ENABLE	R/W	0h	Data end bit error interrupt enable 0h = Masked 1h = Enabled
21	DCRC_ENABLE	R/W	0h	Data CRC error interrupt enable 0h = Masked 1h = Enabled
20	DTO_ENABLE	R/W	0h	Data time-out error interrupt enable 0h = The data time-out detection is deactivated. The host controller provides the clock to the card until the card sends the data or the transfer is aborted. 1h = The data time-out detection is enabled.
19	RESERVED	R	0h	
18	CEB_ENABLE	R/W	0h	Command end bit error interrupt enable 0h = Masked 1h = Enabled

Copyright © 2017, Texas Instruments Incorporated

Table 11-19. MMCHS_IE Register Field Descriptions (continued)

Bit	Field	Type	Reset	Description
17	RESERVED	R	0h	
16	CTO_ENABLE	R/W	0h	Command timeout error interrupt enable 0h = Masked 1h = Enabled
15	NULL	R	0h	Fixed to 0 The host driver controls the error interrupts using the Error Interrupt Signal Enable register. Writes to this bit are ignored.
14-6	RESERVED	R	0h	
5	BRR_ENABLE	R/W	0h	Buffer read ready interrupt enable 0h = Masked 1h = Enabled
4	BWR_ENABLE	R/W	0h	Buffer write ready interrupt enable 0h = Masked 1h = Enabled
3-2	RESERVED	R	0h	
1	TC_ENABLE	R/W	0h	Transfer completed interrupt enable 0h = Masked 1h = Enabled
0	CC_ENABLE	R/W	0h	Command completed interrupt enable 0h = Masked 1h = Enabled

Copyright © 2017, Texas Instruments Incorporated

11.7.16 MMCHS_ISE Register (Offset = 238h) [reset = 0h]

Interrupt Signal Enable register

MMCHS_ISE is shown in Figure 11-17 and described in Table 11-20.

Return to Summary Table.

This register allows to enable or disable the module internal sources of status, on an event-by-event basis.

MMCHS_ISE[31:16] = Error Interrupt Signal Enable

MMCHS_ISE[15:0] = Normal Interrupt Signal Enable

Figure 11-17. MMCHS_ISE Register

31	30	29	28	27	26	25	24
RESERVED		BADA_SIGEN	CERR_SIGEN	RESERVED			
R-0h		R/W-0h	R/W-0h	R-0h			
23	22	21	20	19	18	17	16
RESERVED	DEB_SIGEN	DCRC_SIGEN	DTO_SIGEN	RESERVED	CEB_SIGEN	RESERVED	CTO_SIGEN
R-0h	R/W-0h	R/W-0h	R/W-0h	R-0h	R/W-0h	R-0h	R/W-0h
15	14	13	12	11	10	9	8
NULL	RESERVED						
R-0h	R-0h						
7	6	5	4	3	2	1	0
RESERVED		BRR_SIGEN	BWR_SIGEN	RESERVED		TC_SIGEN	CC_SIGEN
R-0h		R/W-0h	R/W-0h	R-0h		R/W-0h	R/W-0h

LEGEND: R/W = Read/Write; R = Read only; W1toCl = Write 1 to clear bit; *-n* = value after reset

Table 11-20. MMCHS_ISE Register Field Descriptions

Bit	Field	Type	Reset	Description
31-30	RESERVED	R	0h	
29	BADA_SIGEN	R/W	0h	Bad access to data space signal status enable 0h = Masked 1h = Enabled
28	CERR_SIGEN	R/W	0h	Card error interrupt signal status enable 0h = Masked 1h = Enabled
27-23	RESERVED	R	0h	
22	DEB_SIGEN	R/W	0h	Data end bit error signal status enable 0h = Masked 1h = Enabled
21	DCRC_SIGEN	R/W	0h	Data CRC error signal status enable 0h = Masked 1h = Enabled
20	DTO_SIGEN	R/W	0h	Data time-out error signal status enable 0h = Masked 1h = Enabled
19	RESERVED	R	0h	
18	CEB_SIGEN	R/W	0h	Command end bit error signal status enable 0h = Masked 1h = Enabled
17	RESERVED	R	0h	

Copyright © 2017, Texas Instruments Incorporated

Table 11-20. MMCHS_ISE Register Field Descriptions (continued)

Bit	Field	Type	Reset	Description
16	CTO_SIGEN	R/W	0h	Command time-out error signal status enable 0h = Masked 1h = Enabled
15	NULL	R	0h	Fixed to 0 The host driver controls the error interrupts using the Error Interrupt Signal Enable register. Writes to this bit are ignored.
14-6	RESERVED	R	0h	
5	BRR_SIGEN	R/W	0h	Buffer read ready signal status enable 0h = Masked 1h = Enabled
4	BWR_SIGEN	R/W	0h	Buffer write ready signal status enable 0h = Masked 1h = Enabled
3-2	RESERVED	R	0h	
1	TC_SIGEN	R/W	0h	Transfer completed signal status enable 0h = Masked 1h = Enabled
0	CC_SIGEN	R/W	0h	Command completed signal status enable 0h = Masked 1h = Enabled

Copyright © 2017, Texas Instruments Incorporated

Inter-Integrated Sound (I2S) Multi-Channel Audio Serial Port

Topic **Page**

12.1 Overview 376
12.2 Functional Description 377
12.3 Programming Model 377
12.4 Peripheral Library APIs for I2S Configuration 380
12.5 I2S Registers 389

Copyright © 2017, Texas Instruments Incorporated

12.1 Overview

The CC32xx hosts a multi-channel audio serial port. In this version of the device, only the Inter-Integrated Sound (I2S) bit stream format is supported. Given the nature of integration of this peripheral on the CC32xx platform, developers should use peripheral library APIs to control and operate the I2S block. These APIs are tested to ensure I2S operation in master mode (CC32xx sources the I2S bit clock and frame synchronization signals), while interfacing with external audio codecs.

This section describes the I2S APIs provided in the CC32xx Software Development Kit [Peripheral Library]. This document uses a reference audio application to illustrate the usage of the I2S APIs.

12.1.1 I2S Format

The I2S format is used in audio interfaces. I2S format is realized by configuring the internal TDM transfer mode to 2 slots per frame.

I2S format is designed to transfer a stereo channel (left and right) over a single data pin. Slots are also commonly referred to as channels. The frame width duration in the I2S format is the same as the slot size. The frame signal is also referred to as 'word select' in the I2S format.

Figure 12-1 shows the I2S protocol.

Figure 12-1. I2S Protocol

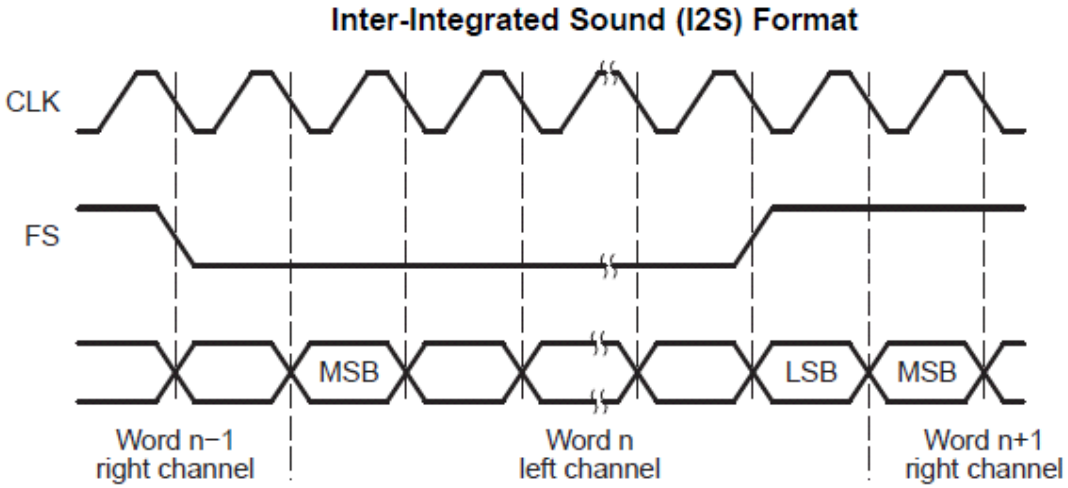

Figure 12-2 is a functional diagram of the I2S module.

Copyright © 2017, Texas Instruments Incorporated

Figure 12-2. I2S Module

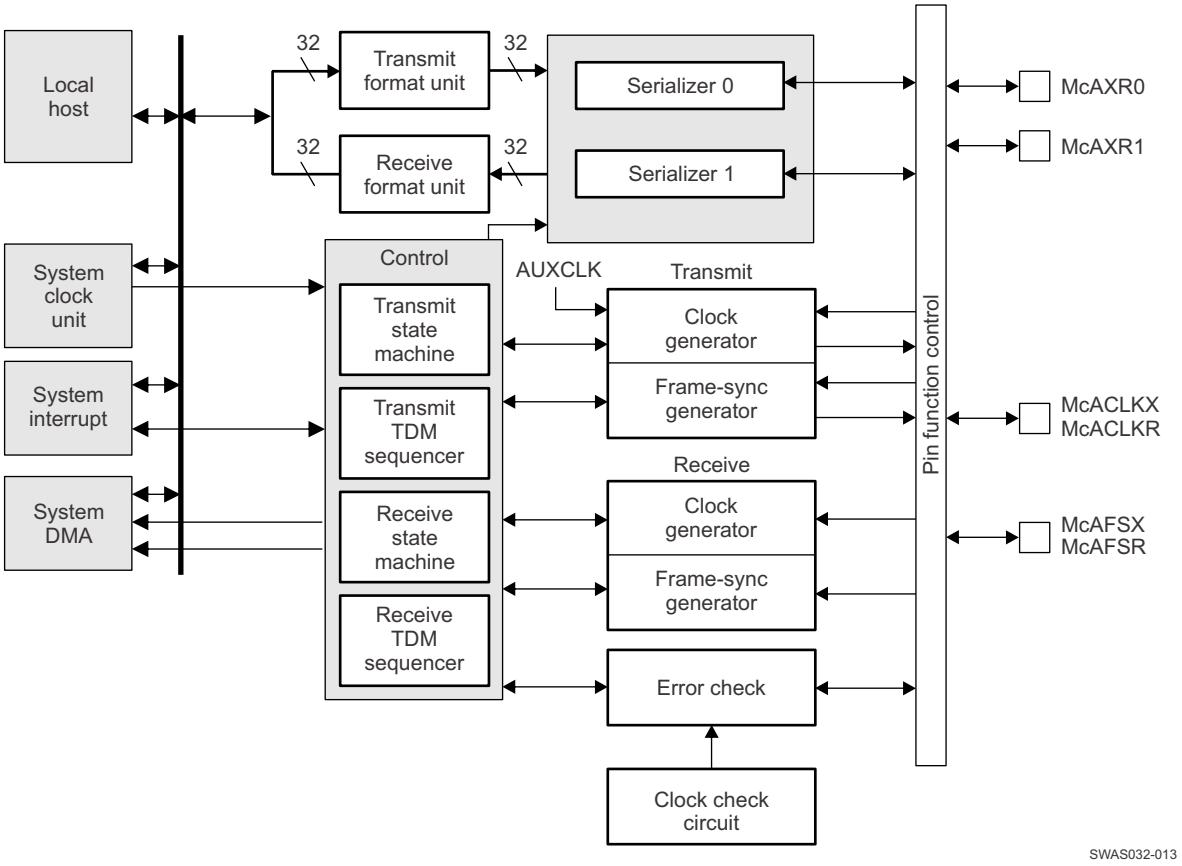

12.2 Functional Description

The following lists the configuration options:

- Interface
  - Bit clock configuration (generated internally in the device) – speed, polarity, and so forth
  - Frame sync configuration – speed, polarity, width, and so forth.
- Data Format
  - Alignment (left or right)
  - Order (MSB first or LSB first)
  - Pad
  - Slot size
- Data transfer (CPU or DMA)

For details on the APIs used for I2S configuration, see Section 12.4.

12.3 Programming Model

12.3.1 Clock and Reset Management

The Power, Reset and Clock Module (PRCM) manages the clock and reset. The I2S master module is sourced by a 240-MHz clock through a fractional clock divider. By default, this divider is set to output 24-MHz clock to the I2S module. The minimum frequency obtained by configuring this divider is (240000 KHz/1023.99) = 234.377 KHz.

Copyright © 2017, Texas Instruments Incorporated

This divider can be configured using the PRCMI2SClockFreqSet(unsigned long ulI2CClkFreq) API from the PRCM module driver.

The module also has two internal dividers supporting a wide range of bit clock frequency. The following block diagram shows the logical clock path.

Figure 12-3. Logical Clock Path

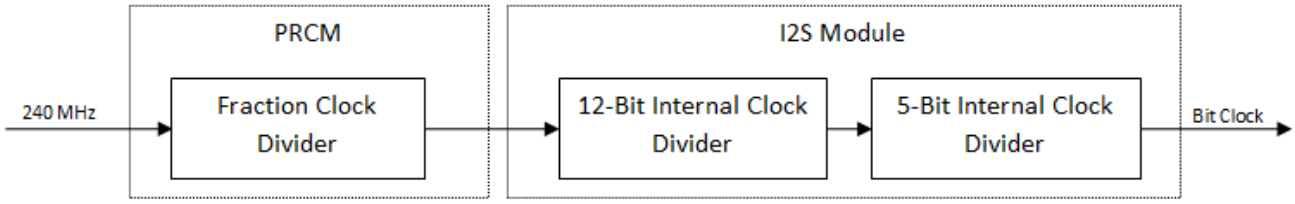

The user resets the module to return the internal registers to their default state by calling the PRCM reset API with the appropriate parameters.

12.3.2 I2S Data Port Interface

The I2S module has two data interfaces: CPU port and DMA port. Either can be used to feed transmit data into the I2S transmit buffer, or read received data from the receive buffer.

CPU Port: This port exposes the I2S buffers as 32-bit registers with one register per serializer (or data line), and can be written or read using the following APIs:

- I2SDataPutNonBlocking(unsigned long ulBase, unsigned long ulDataLine, long ulData)
- I2SDataPut(unsigned long ulBase, unsigned long ulDataLine, long ulData)
- I2SDataGetNonBlocking(unsigned long ulBase, unsigned long ulDataLine, long &ulData)
- I2SDataGet(unsigned long ulBase, unsigned long ulDataLine, long &ulData)

DMA Port: This port exposes the I2S buffers as two 32 bit registers, one each for transmit and receive. The transmit port services each serializer configured as transmit in a cyclic order, if multiple serializers are configured as a transmitter.

Similarly, the receive port services each serializer configured as receiver in a cyclic order if multiple serializers are configured as a transmitter.

The ports can be assessed using following macros:

- I2S_TX_DMA_PORT 0x4401E200
- I2S_RX_DMA_PORT 0x4401E280

12.3.3 Initialization and Configuration

I2S on the CC32xx acts as master providing frame sync and bit clock to slave and can operate in two modes: transmit-only mode and synchronous transmit – receive mode.

In transmit-only mode, the device is only configured to transmit data. In synchronous transmit – receive mode, the device is configured to transmit and receive in a synchronous manner. In both cases the data transmitted and received is in sync with the frame sync and bit clock signals generated internally by the I2S module.

This section shows a module initialization and configuration example for each mode supported to transmit and receive 16-bit, 44.1-KHz audio.

1. Computing bit clock from sampling frequency and bits/sample:

```
BitClock = (Sampling_Frequency * 2 * bits/sample)
BitClock = (44100 * 2 * 16) = 1411200 Hz
```

2. Basic initialization

   (a) Enable the I2S module clock by invoking

Copyright © 2017, Texas Instruments Incorporated

PRCMPeripheralClkEnable(PRCM_I2S,PRCM_RUN_MODE_CLK).

(b) Reset the module using PRCMPeripheralReset(PRCM_I2S).

(c) Set fractional clock divider to generate module input clock of BitRate * 10:

```
PRCMI2SClockFreqSet(14112000)
```

(d) Configure the internal divider of the module to generate the required bit clock frequency:

```
I2SConfigSetExpClk(I2S_BASE, 14112000, 1411200, I2S_SLOT_SIZE_16|I2S_PORT_CPU).
```

The second parameter “I2S_SLOT_SIZE_16|I2S_PORT_CPU” sets the slot size and chooses the port interface on which the I2C module should expect the data.

(e) Register the interrupt handler and enable the transmit data interrupt:

```
I2SIntRegister(I2S_BASE, I2SIntHandler)

I2SIntEnable(I2S_BASE,I2S_INT_XDATA)
```

3. Transmit-only mode with interrupts

(a) Configure the serializer 0 for transmit:

```
I2SSerializerConfig(I2S_BASE, I2S_DATA_LINE_0,I2S_SER_MODE_TX, I2S_INACT_LOW_LEVEL)
```

(b) Enable I2S module in transmit-only mode:

```
I2SEnable(I2S_BASE, I2S_MODE_TX_ONLY)
```

4. Synchronous transmit – receive with interrupts

(a) Enable receive data Interrupt:

```
I2SIntEnable(I2S_BASE,I2S_INT_XDATA)
```

(b) Configure the serializer 0 for transmit and serializer 1 for receive:

```
I2SSerializerConfig(I2S_BASE, I2S_DATA_LINE_0, I2S_SER_MODE_TX, I2S_INACT_LOW_LEVEL)

I2SSerializerConfig(I2S_BASE, I2S_DATA_LINE_1, I2S_SER_MODE_RX, I2S_INACT_LOW_LEVEL)
```

(c) Enable I2S module in synchronous transmit – receive mode:

```
I2SEnable(I2S_BASE, I2S_MODE_TX_RX_SYNC)
```

5. Generic I2S interrupt handler

```
void I2SIntHandler()
{
unsigned long ulStatus;
unsigned long ulDummy;

// Get the interrupt status
ulStatus = I2SIntStatus(I2S_BASE);

// Check if there was a Transmit interrupt; if so write next data into the tx buffer and
acknowledge
// the interrupt
if(ulStatus
&I2S_STS_XDATA)
{
     I2SDataPutNonBlocking(I2S_BASE,I2S_DATA_LINE_0,0xA5)
     I2SIntClear(I2S_BASE,I2S_STS_XDATA);
}

// Check if there was a receive interrupt; if so read the data from the rx buffer and
acknowledge
// the interrupt
if(ulStatus
&I2S_STS_RDATA)
{
     I2SDataGetNonBlocking( I2S_BASE, I2S_DATA_LINE_1,
&ulDummy);
                                     I2SIntClear(I2S_BASE,I2S_STS_RDATA);
}
}
```


Copyright © 2017, Texas Instruments Incorporated

12.4 Peripheral Library APIs for I2S Configuration

This section describes the APIs hosted in the CC32xx SDK (Peripheral Library) necessary for I2S configuration.

12.4.1 Basic APIs for Enabling and Configuring the Interface

void I2SDisable (unsigned long ulBase)

Disables transmit and/or receive.

Parameters:

`ulBase` — the base address of the I2S module.

This function disables transmit, receive, or both from the I2S module.

Returns:

None.

12.4.1.1 void I2SEnable (unsigned long ulBase, unsigned long ulMode)

Enables transmit and/or receive.

Parameters:

`ulBase` — is the base address of the I2S module.

`ulMode` — is one of the valid modes.

This function enables the I2S module in specified mode.

The parameter `ulMode` should be one of the following:

```
-I2S_MODE_TX_ONLY -I2S_MODE_TX_RX_SYNC
```

Returns:

None.

Reference:

`ulMode`parameter

```
#define I2S_MODE_TX_ONLY 0x00000001 #define
        I2S_MODE_TX_RX_SYNC 0x00000003
```

12.4.1.2 void I2SSerializerConfig (unsigned long ulBase, unsigned long ulDataLine, unsigned long ulSerMode, unsigned long ulInActState)

Configure the serializer in a specified mode.

Parameters:

`ulBase` — is the base address of the I2S module.

`ulDataLine` — is the data line (serilizer) to be configured.

`ulSerMode` — is the required serializer mode.

`ulInActState` — sets the inactive state of the data line.

This function configures and enables the serializer associated with the given data line in specified mode.

Copyright © 2017, Texas Instruments Incorporated

The parameter ulDataLine selects the data line to be configured, and can be one of the following:

```
-I2S_DATA_LINE_0 -I2S_DATA_LINE_1
```

The parameter ulSerMode can be one of the following:

```
-I2S_SER_MODE_TX -I2S_SER_MODE_RX
        -I2S_SER_MODE_DISABLE
```

The parameter ulInActState can be one of the following:

```
-I2S_INACT_TRI_STATE -I2S_INACT_LOW_LEVEL
        -I2S_INACT_LOW_HIGH
```

Returns:

Returns receive FIFO status.

References:

ulDataLine parameter

```
#define I2S_DATA_LINE_0 0x00000001 #define
        I2S_DATA_LINE_1 0x00000002
```

ulSerMode parameter

```
#define I2S_SER_MODE_TX 0x00000001 #define
        I2S_SER_MODE_RX 0x00000002 #define I2S_SER_MODE_DISABLE
        0x00000000
```

ulInActState parameter

```
#define I2S_INACT_TRI_STATE 0x00000000 #define
        I2S_INACT_LOW_LEVEL 0x00000008 #define I2S_INACT_HIGH_LEVEL
        0x0000000C
```

12.4.1.3 void I2SConfigSetExpClk (unsigned long ulBase, unsigned long ulI2SClk, unsigned long ulBitClk, unsigned long ulConfig)

Sets the configuration of the I2S module.

Parameters:

ulBase — is the base address of the I2S module.

ulI2SClk — is the rate of the clock supplied to the I2S module.

ulBitClk — is the desired bit rate.

ulConfig — is the data format.

This function configures the I2S for operation in the specified data format. The bit rate is provided in the ulBitClk parameter and the data format in the ulConfig parameter.

The ulConfig parameter is the logical OR of two values: the slot size and the data read/write port select.

The following parameters select the slot size:

```
-I2S_SLOT_SIZE_24 -I2S_SLOT_SIZE_16
```

The following parameters select the data read/write port:

```
-I2S_PORT_DMA -I2S_PORT_CPU
```

Returns:

Copyright © 2017, Texas Instruments Incorporated

None.

Reference:

```
#define I2S_SLOT_SIZE_24 0x00B200B4 #define
        I2S_SLOT_SIZE_16 0x00700074 #define I2S_PORT_CPU 0x00000008 #define
        I2S_PORT_DMA 0x00000000
```

12.4.2 APIs for Data Access if DMA is Not Used

12.4.2.1 void I2SDataGet (unsigned long ulBase, unsigned long ulDataLine, unsigned long * pulData)

Waits for data from the specified data line.

Parameters:

`ulBase` **—** is the base address of the I2S module.

`ulDataLine` **—** is one of the valid data lines.

`pulData` **—** is a pointer to the receive data variable.

This function gets data from the receive register for the specified data line. If there is no data available, this function waits until a receive before returning.

Returns:

None.

12.4.2.2 long I2SDataGetNonBlocking (unsigned long ulBase, unsigned long ulDataLine, unsigned long * pulData)

Receives data from the specified data line.

Parameters:

`ulBase` **—** is the base address of the I2S module.

`ulDataLine` **—** is one of the valid data lines.

`pulData` **—** is a pointer to the receive data variable.

This function gets data from the receive register for the specified data line.

Returns:

Returns 0 on success, -1 otherwise.

12.4.2.3 void I2SDataPut (unsigned long ulBase, unsigned long ulDataLine, unsigned long ulData)

Waits to send data over the specified data line.

Parameters:

`ulBase` **—** is the base address of the I2S module.

`ulDataLine` **—** is one of the valid data lines.

`ulData` **—** is the data to be transmitted.

This function sends the `ucData` to the transmit register for the specified data line. If there is no space available, this function waits until there is space available before returning.

Copyright © 2017, Texas Instruments Incorporated

Returns:

None.

12.4.2.4 void I2SDataPut (unsigned long ulBase, unsigned long ulDataLine, unsigned long ulData)

Waits to send data over the specified data line.

Parameters:

`ulBase` — is the base address of the I2S module.

`ulDataLine` — is one of the valid data lines.

`ulData` — is the data to be transmitted.

This function writes the `ucData` to the transmit register for the specified data line. This function does not block, so if there is no space available, then –1 is returned, and the application must retry the function later.

Returns:

Returns 0 on success, -1 otherwise.

12.4.3 APIs for Setting Up, Handling Interrupts, or Getting Status from I2S Peripheral

12.4.3.1 void I2SIntRegister (unsigned long ulBase, void(*)(void) pfnHandler)

Registers an interrupt handler for an I2S interrupt.

Parameters:

`ulBase` — is the base address of the I2S module.

`pfnHandler` — is a pointer to the function to be called when the I2S interrupt occurs.

This function registers the interrupt handler. This function enables the global interrupt in the interrupt controller; specific I2S interrupts must be enabled using `I2SIntEnable()`. The interrupt handler must clear the interrupt source.

See `IntRegister()` for information about registering interrupt handlers.

Returns:

None.

12.4.3.2 void I2SIntEnable (unsigned long ulBase, unsigned long ulIntFlags)

Enables individual I2S interrupt sources.

Parameters:

`ulBase` — is the base address of the I2S module.

`ulIntFlags` — is the bit mask of the interrupt sources to be enabled.

This function enables the indicated I2S interrupt sources. Only enabled sources can be reflected to the processor interrupt; disabled sources have no effect on the processor.

The `ulIntFlags` parameter is the logical OR for any of the following:

```
-I2S_INT_XUNDRN -I2S_INT_XSYNCERR -I2S_INT_XLAST -I2S_INT_XDATA
        -I2S_INT_XSTAFRM -I2S_INT_XDMA -I2S_INT_ROVRN -I2S_INT_RSYNCERR
        -I2S_INT_RLAST -I2S_INT_RDATA -I2S_INT_RSTAFRM -I2S_INT_RDMA
```


Copyright © 2017, Texas Instruments Incorporated

Returns:

None.

12.4.3.3 void I2SIntDisable (unsigned long ulBase, unsigned long ulIntFlags)

Disables individual I2S interrupt sources.

Parameters:

`ulBase` **—** is the base address of the I2S module.

`ulIntFlags` **—** is the bit mask of the interrupt sources to be disabled.

This function disables the indicated I2S interrupt sources. Only enabled sources can be reflected to the processor interrupt; disabled sources have no effect on the processor.

The `ulIntFlags` parameter has the same definition as the `ulIntFlags` parameter to `I2SIntEnable()`.

Returns:

None.

12.4.3.4 unsigned long I2SIntStatus (unsigned long ulBase)

Gets the current interrupt status.

Parameters:

`ulBase` **—** is the base address of the I2S module.

This function returns the raw interrupt status for I2S enumerated as a bit field of values:

```
-I2S_STS_XERR -I2S_STS_XDMAERR -I2S_STS_XSTAFRM -I2S_STS_XDATA
        -I2S_STS_XLAST -I2S_STS_XSYNCERR -I2S_STS_XUNDRN -I2S_STS_XDMA
        -I2S_STS_RERR -I2S_STS_RDMAERR -I2S_STS_RSTAFRM -I2S_STS_RDATA
        -I2S_STS_RLAST -I2S_STS_RSYNCERR -I2S_STS_ROVERN -I2S_STS_RDMA
```

Returns:

Returns the current interrupt status, enumerated as a bit field of the values described above.

12.4.3.5 void I2SIntUnregister (unsigned long ulBase)

Unregisters an interrupt handler for a I2S interrupt.

Parameters:

`ulBase` **—** is the base address of the I2S module.

This function unregisters the interrupt handler. The function clears the handler to be called when a I2S interrupt occurs. This function also masks off the interrupt in the interrupt controller so that the interrupt handler no longer is called.

See `IntRegister()` for information about registering interrupt handlers.

Returns:

None.

Copyright © 2017, Texas Instruments Incorporated

12.4.3.6 void I2SIntClear (unsigned long ulBase, unsigned long ulStatFlags)

Clears I2S interrupt sources.

Parameters:

`ulBase` — is the base address of the I2S module.

`ulStatFlags` — is a bit mask of the interrupt sources to be cleared.

The specified I2S interrupt sources are cleared, so that they no longer assert. This function must be called in the interrupt handler to keep the interrupt from being recognized again immediately upon exit.

The `ulIntFlags` parameter is the logical OR of any of the value described in `I2SIntStatus()`.

Returns:

None.

12.4.3.7 Values that can be passed to I2SIntEnable() and I2SIntDisable() as the ulIntFlags parameter

Table 12-1 lists the values that can be passed to `I2SIntEnable()` and `I2SIntDisable()` as the `ulIntFlags` parameter.

Table 12-1. ulIntFlags Parameter

Tag	Value	Description
I2S_INT_XUNDR	0x00000001	Transmit underrun interrupt enable bit
I2S_INT_XSYNCERR	0x00000002	Unexpected transmit frame sync interrupt enable bit
I2S_INT_XLAST	0x00000010	Transmit last slot interrupt enable bit
I2S_INT_XDATA	0x00000020	Transmit data ready interrupt enable bit
I2S_INT_XSTAFRM	0x00000080	Transmit start of frame interrupt enable bit
I2S_INT_XDMA	0x80000000	
I2S_INT_ROVRN	0x00010000	Receiver overrun interrupt enable bit
I2S_INT_RSYNCERR	0x00020000	Unexpected receive frame sync interrupt enable bit
I2S_INT_RLAST	0x00100000	Receive start of frame interrupt enable bit
I2S_INT_RDATA	0x00200000	Receive data ready interrupt enable bit
I2S_INT_RSTAFRM	0x00800000	Receive start of frame interrupt enable bit
I2S_INT_RDMA	0x40000000	

12.4.3.8 Values that can be passed to I2SIntClear() as the ulStatFlags parameter and returned from I2SIntStatus()

Table 12-2 lists the values that can be passed to `I2SIntClear()` as the `ulStatFlags` parameter and returned from `I2SIntStatus()`.

Table 12-2. ulStatFlags Parameter

Tag	Value	Description
I2S_STS_XERR	0x00000100	XERR bit always returns a logic-OR of: XUNDRN | XSYNCERR | XCKFAIL | XDMAERR
I2S_STS_XDMAERR	0x00000080	Transmit DMA error flag. XDMAERR is set when the CPU or DMA writes more serializers through the data port in a given time slot than were programmed as transmitters
I2S_STS_XSTAFRM	0x00000040	Transmit start of frame flag

Copyright © 2017, Texas Instruments Incorporated

Table 12-2. ulStatFlags Parameter (continued)

Tag	Value	Description
I2S_STS_XDATA	0x00000020	Transmit data ready flag. 1 indicates that data is copied from Tx Buffer to shift register. Tx Buffer is EMPTY and ready to be written. 0 indicates Tx Buffer is FULL
I2S_STS_XLAST	0x00000010	Transmit last slot flag. XLAST is set along with XDATA, if the current slot is the last slot in a frame.
I2S_STS_XSYNCERR	0x00000002	Unexpected transmit frame sync flag. XSYNCERR is set when a new transmit frame sync (AFSX) occurs before it is expected.
I2S_STS_XUNDRN	0x00000001	Transmitter underrun flag. XUNDRN is set when the transmit serializer is instructed to transfer data from Tx Buffer, but Tx Buffer has not yet been serviced with new data since the last transfer.
I2S_STS_XDMA	0x80000000	
I2S_STS_RERR	0x01000000	RERR bit always returns a logic-OR of: ROVRN | RSYNCERR | RCKFAIL | RDMAERR. Allows a single bit to be checked to determine if a receiver error interrupt has occurred.
I2S_STS_RDMAERR	0x00800000	Receive DMA error. Receive DMA error flag. RDMAERR is set when the CPU or DMA reads more serializers through the data port in a given time slot than were programmed as receivers
I2S_STS_RSTAFRM	0x00400000	Receive start of frame flag. Indicates A new receive frame sync is detected
I2S_STS_RDATA	0x00200000	Receive data ready flag. Indicates data is transferred from shift register to Rx buffer and ready to be serviced by the CPU or DMA. When RDATA is set, it always causes a DMA event.
I2S_STS_RLAST	0x00100000	Receive last slot flag. RLAST is set along with RDATA, if the current slot is the last slot in a frame.
I2S_STS_RSYNCERR	0x00020000	Unexpected receive frame sync. Unexpected receive frame sync flag. RSYNCERR is set when a new receive frame sync occurs before it is expected.
I2S_STS_ROVERN	0x00010000	Receive clock failure. Receiver overrun flag. ROVRN is set when the receive serializer is instructed to transfer data from XRSR to RBUF, but the former data in RBUF has not yet been read by the CPU or DMA.
I2S_STS_RDMA	0x40000000	

12.4.4 APIs to Control FIFO Structures Associated with I2S Peripheral

12.4.4.1 void I2SRxFIFODisable (unsigned long ulBase)

Disables receive FIFO.

Parameters:

`ulBase` **—** is the base address of the I2S module.

This function disables the I2S receive FIFO.

Returns:

None.

12.4.4.2 void I2SRxFIFOEnable (unsigned long ulBase, unsigned long ulRxLevel, unsigned long ulWordsPerTransfer)

Configures and enables receive FIFO.

Copyright © 2017, Texas Instruments Incorporated

Parameters:

`ulBase` — is the base address of the I2S module.

`ulRxLevel` — is the receive FIFO DMA request level.

`ulWordsPerTransfer` — is the nuber of words transferred from the FIFO.

This function configures and enables I2S receive FIFO.

The parameter `ulRxLevel` sets the level at which receive DMA requests are generated. This should be non-zero integer multiple of number of serializers enabled as receivers.

The parameter `ulWordsPerTransfer` sets the number of words transferred to the receive FIFO from the data lines. This value must equal the number of serializers used as receivers.

Returns:

None.

12.4.4.3 unsigned long I2SRxFIFOStatusGet (unsigned long ulBase)

Get the receive FIFO status.

Parameters:

`ulBase` — is the base address of the I2S module.

This function gets the number of 32-bit words currently in the receive FIFO.

Returns:

Returns receive FIFO status.

12.4.4.4 void I2STxFIFODisable (unsigned long ulBase)

Disables transmit FIFO.

Parameters:

`ulBase` — is the base address of the I2S module.

This function disables the I2S transmit FIFO.

Returns:

None.

12.4.4.5 void I2STxFIFOEnable (unsigned long ulBase, unsigned long ulTxLevel, unsigned long ulWordsPerTransfer)

Configures and enables transmit FIFO.

Parameters:

`ulBase` — is the base address of the I2S module.

`ulTxLevel` — is the transmit FIFO DMA request level.

`ulWordsPerTransfer` — is the number of words transferred from the FIFO.

Copyright © 2017, Texas Instruments Incorporated

This function configures and enables I2S transmit FIFO.

The parameter `ulTxLevel` sets the level at which transmit DMA requests are generated. This should be non-zero integer multiple of number of serializers enabled as transmitters.

The parameter `ulWordsPerTransfer` sets the number of words that are transferred from the transmit FIFO to the data lines. This value must equal the number of serializers used as transmitters.

Returns:

None.

12.4.4.6 unsigned long I2STxFIFOStatusGet (unsigned long ulBase)

Gets the transmit FIFO status.

Parameters:

`ulBase` **—** is the base address of the I2S module.

This function gets the number of 32-bit words currently in the transmit FIFO.

Returns:

Returns transmit FIFO status.

Copyright © 2017, Texas Instruments Incorporated

12.5 I2S Registers

Control registers for the McASP are summarized in Table 12-3. The control registers are accessed through the peripheral configuration port. The receive buffer registers (RBUF) and transmit buffer registers (XBUF) can also be accessed through the DMA port, as listed in Table 12-4. See the device-specific data manual for the memory address of these registers.

Control registers for the McASP Audio FIFO (AFIFO) are summarized in Table 12-5. The AFIFO Write FIFO (WFIFO) and Read FIFO (RFIFO) have independent control and status registers. The AFIFO control registers are accessed through the peripheral configuration port. See the device-specific data manual for the memory address of these registers.

Table 12-3 lists the memory-mapped registers for the I2S. All register offset addresses not listed in Table 12-3 should be considered as reserved locations and the register contents should not be modified.

Base address is 0x4401C000.

Table 12-3. I2S Registers Accessed Through Peripheral Configuration Port

Offset	Acronym	Register Name	Section
14h	PDIR	Pin direction register	Section 12.5.3
44h	GBLCTL	Global control register	Section 12.5.6
60h	RGBLCTL	Receiver global control register: Alias of GBLCTL, only receive bits are affected - allows receiver to be reset independently from transmitter	Section 12.5.7
64h	RMASK	Receive format unit bit mask register	Section 12.5.8
68h	RFMT	Receive bit stream format register	Section 12.5.9
6Ch	AFSRCTL	Receive frame sync control register	Section 12.5.10
78h	RTDM	Receive TDM time slot 0-31 register	Section 12.5.11
7Ch	RINTCTL	Receiver interrupt control register	Section 12.5.12
80h	RSTAT	Receiver status register	Section 12.5.13
84h	RSLOT	Current receive TDM time slot register	Section 12.5.14
8Ch	REVTCTL	Receiver DMA event control register	Section 12.5.15
A0h	XGBLCTL	Transmitter global control register. Alias of GBLCTL, only transmit bits are affected - allows transmitter to be reset independently from receiver	Section 12.5.16
A4h	XMASK	Transmit format unit bit mask register	Section 12.5.17
A8h	XFMT	Transmit bit stream format register	Section 12.5.18
ACh	AFSXCTL	Transmit frame sync control register	Section 12.5.19
B0h	ACLKXCTL	Transmit clock control register	Section 12.5.20
B4h	AHCLKXCTL	Transmit high-frequency clock control register	Section 12.5.21
B8h	XTDM	Transmit TDM time slot 0-31 register	Section 12.5.22
BCh	XINTCTL	Transmitter interrupt control register	Section 12.5.23
C0h	XSTAT	Transmitter status register	Section 12.5.24
C4h	XSLOT	Current transmit TDM time slot register	Section 12.5.25
C8h	XCLKCHK	Transmit clock check control register	
CCh	XEVTCTL	Transmitter DMA event control register	Section 12.5.26
180h	SRCTL0	Serializer control register 0	Section 12.5.27
184h	SRCTL1	Serializer control register 1	Section 12.5.27
200h	XBUF0 (1)	Transmit buffer register for serializer 0	Section 12.5.28
204h	XBUF1 (1)	Transmit buffer register for serializer 1	Section 12.5.28
280h	RBUF0 (2)	Receive buffer register for serializer 0	Section 12.5.29
284h	RBUF1 (2)	Receive buffer register for serializer 1	Section 12.5.29

(1) Writes to XRBUF originate from peripheral configuration port only when XBUSEL = 1 in XFMT.
(2) Reads from XRBUF originate on peripheral configuration port only when RBUSEL = 1 in RFMT.

Copyright © 2017, Texas Instruments Incorporated

Table 12-4. I2S Registers Accessed Through DMA Port

Hex Address	Register Name	Register Description
Read Accesses	RBUF	Receive buffer DMA port address. Cycles through receive serializers, skipping over transmit serializers and inactive serializers. Starts at the lowest serializer at the beginning of each time slot. Reads from DMA port only if XBUSEL = 0 in XFMT.
Write Accesses	XBUF	Transmit buffer DMA port address. Cycles through transmit serializers, skipping over receive and inactive serializers. Starts at the lowest serializer at the beginning of each time slot. Writes to DMA port only if RBUSEL = 0 in RFMT.

Table 12-5. I2S AFIFO Registers Accessed Through Peripheral Configuration Port

Offset	Acronym	Register	Section
0h	AFIFOREV	AFIFO revision identification register	Section 12.5.1
10h	WFIFOCTL	Write FIFO control register	Section 12.5.2
14h	WFIFOSTS	Write FIFO status register	
18h	RFIFOCTL	Read FIFO control register	Section 12.5.4
1Ch	RFIFOSTS	Read FIFO status register	Section 12.5.5

Copyright © 2017, Texas Instruments Incorporated

12.5.1 AFIFOREV Register (Offset = 0h) [reset = 0h]

AFIFOREV is shown in Figure 12-4 and described in Table 12-6.

Return to Summary Table.

Figure 12-4. AFIFOREV Register

31	30	29	28	27	26	25	24	23	22	21	20	19	18	17	16	15	14	13	12	11	10	9	8	7	6	5	4	3	2	1	0
REV																															
R-0h																															

LEGEND: R/W = Read/Write; R = Read only; W1toCl = Write 1 to clear bit; *-n* = value after reset

Table 12-6. AFIFOREV Register Field Descriptions

Bit	Field	Type	Reset	Description
31-0	REV	R	0h	Identifies revision of peripheral.

Copyright © 2017, Texas Instruments Incorporated

12.5.2 WFIFOCTL Register (Offset = 10h) [reset = 1004h]

WFIFOCTL is shown in Figure 12-5 and described in Table 12-7.

Return to Summary Table.

The WNUMEVT and WNUMDMA values must be set prior to enabling the Write FIFO. If the Write FIFO is to be enabled, it must be enabled prior to taking the I2S out of reset.

Figure 12-5. WFIFOCTL Register

31	30	29	28	27	26	25	24
RESERVED							
R-0h							
23	22	21	20	19	18	17	16
RESERVED							WENA
R-0h							R/W-0h
15	14	13	12	11	10	9	8
WNUMEVT							
R/W-10h							
7	6	5	4	3	2	1	0
WNUMDMA							
R/W-4h							

LEGEND: R/W = Read/Write; R = Read only; W1toCl = Write 1 to clear bit; *-n* = value after reset

Table 12-7. WFIFOCTL Register Field Descriptions

Bit	Field	Type	Reset	Description
31-17	RESERVED	R	0h	Reserved. The reserved bit location always returns the default value. A value written to this field has no effect. If writing to this field, always write the default value for future device compatibility.
16	WENA	R/W	0h	Write FIFO enable bit. 0h = Write FIFO is disabled. The WLVL bit in the Write FIFO status register (WFIFOSTS) is reset to 0 and pointers are initialized, that is, the Write FIFO is “flushed.” 1h = Write FIFO is enabled. If Write FIFO is to be enabled, it must be enabled prior to taking I2S out of reset.
15-8	WNUMEVT	R/W	10h	Write word count per DMA event (32-bit). When the Write FIFO has space for at least WNUMEVT words of data, then an AXEVT (transmit DMA event) is generated to the host/DMA controller. This value should be set to a non-zero integer multiple of the number of serializers enabled as transmitters. This value must be set prior to enabling the Write FIFO. 0h = 0 words 1h = 1 word 2h = 2 words 3h - 40h = 3 to 16 words 41h - FFh = Reserved
7-0	WNUMDMA	R/W	4h	Write word count per transfer (32-bit words). Upon a transmit DMA event from the McASP, WNUMDMA words are transferred from the Write FIFO to the I2S. This value must equal the number of McASP serializers used as transmitters. This value must be set prior to enabling the Write FIFO. 0h = 0 words 1h = 1 word 2h = 2 words 3h - 10h = 3 to 16 words 11h - FFh = Reserved

Copyright © 2017, Texas Instruments Incorporated

12.5.3 PDIR Register (Offset = 14h) [reset = 0h]

PDIR is shown in Figure 12-6 and described in Table 12-8.

Return to Summary Table.

The pin direction register (PDIR) specifies the direction of AXR[n], ACLKX, AHCLKX, AFSX, ACLKR, AHCLKR, and AFSR pins as either input or output pins.

Regardless of the pin function register (PFUNC) setting, each PDIR bit must be set to 1 for the specified pin to be enabled as an output, and each PDIR bit must be cleared to 0 for the specified pin to be an input.

For example, if the I2S is configured to use an internally-generated bit clock and the clock is to be driven out to the system, the PFUNC bit must be cleared to 0 (McASP function) and the PDIR bit must be set to 1 (an output).

When AXR[n] is configured to transmit, the PFUNC bit must be cleared to 0 (McASP function) and the PDIR bit must be set to 1 (an output). Similarly, when AXR[n] is configured to receive, the PFUNC bit must be cleared to 0 (McASP function) and the PDIR bit must be cleared to 0 (an input).

CAUTION

Writing to Reserved Bits: Writing a value other than 0 to reserved bits in this register may cause improper device operation. This includes bits that are not implemented on a particular DSP.

Figure 12-6. PDIR Register

31	30	29	28	27	26	25	24
AFSR	AHCLKR	ACLKR	AFSX	AHCLKX	ACLKX	AMUTE	RESERVED
R/W-0h	R/W-0h	R/W-0h	R/W-0h	R/W-0h	R/W-0h	R/W-0h	R-0h
23	22	21	20	19	18	17	16
RESERVED							
R-0h							
15	14	13	12	11	10	9	8
AXR[15-0]							
R/W-0h							
7	6	5	4	3	2	1	0
AXR[15-0]							
R/W-0h							

LEGEND: R/W = Read/Write; R = Read only; W1toCl = Write 1 to clear bit; *-n* = value after reset

Table 12-8. PDIR Register Field Descriptions

Bit	Field	Type	Reset	Description
31	AFSR	R/W	0h	Determines if AFSR pin functions as an input or output. 0h = Pin functions as input. 1h = Pin functions as output.
30	AHCLKR	R/W	0h	Determines if AHCLKR pin functions as an input or output. 0h = Pin functions as input. 1h = Pin functions as output.
29	ACLKR	R/W	0h	Determines if ACLKR pin functions as an input or output. 0h = Pin functions as input. 1h = Pin functions as output.

Copyright © 2017, Texas Instruments Incorporated

Table 12-8. PDIR Register Field Descriptions (continued)

Bit	Field	Type	Reset	Description
28	AFSX	R/W	0h	Determines if AFSX pin functions as an input or output. 0h = Pin functions as input. 1h = Pin functions as output.
27	AHCLKX	R/W	0h	Determines if AHCLKX pin functions as an input or output. 0h = Pin functions as input. 1h = Pin functions as output.
26	ACLKX	R/W	0h	Determines if ACLKX pin functions as an input or output. 0h = Pin functions as input. 1h = Pin functions as output.
25	AMUTE	R/W	0h	Determines if AMUTE pin functions as an input or output. 0h = Pin functions as input. 1h = Pin functions as output.
24-16	RESERVED	R	0h	Reserved. The reserved bit location always returns the default value. A value written to this field has no effect. If writing to this field, always write the default value for future device compatibility.
15-0	AXR[15-0]	R/W	0h	Determines if AXR[n] pin functions as an input or output. 0h = Pin functions as input. 1h = Pin functions as output.

Copyright © 2017, Texas Instruments Incorporated

12.5.4 RFIFOCTL Register (Offset = 18h) [reset = 1004h]

RFIFOCTL is shown in Figure 12-7 and described in Table 12-9.

Return to Summary Table.

The RNUMEVT and RNUMDMA values must be set prior to enabling the Read FIFO. If the Read FIFO is to be enabled, it must be enabled prior to taking the McASP out of reset.

Figure 12-7. RFIFOCTL Register

31	30	29	28	27	26	25	24
RESERVED							
R-0h							
23	22	21	20	19	18	17	16
RESERVED							RENA
R-0h							R/W-0h
15	14	13	12	11	10	9	8
RNUMEVT							
R/W-10h							
7	6	5	4	3	2	1	0
RNUMDMA							
R/W-4h							

LEGEND: R/W = Read/Write; R = Read only; W1toCl = Write 1 to clear bit; *-n* = value after reset

Table 12-9. RFIFOCTL Register Field Descriptions

Bit	Field	Type	Reset	Description
31-17	RESERVED	R	0h	Reserved. The reserved bit location always returns the default value. A value written to this field has no effect. If writing to this field, always write the default value for future device compatibility.
16	RENA	R/W	0h	Read FIFO enable bit. 0h = Read FIFO is disabled. The RLVL bit in the Read FIFO status register (RFIFOSTS) is reset to 0 and pointers are initialized, that is, the Read FIFO is “flushed.” 1h = Read FIFO is enabled. If Read FIFO is to be enabled, it must be enabled prior to taking McASP out of reset.
15-8	RNUMEVT	R/W	10h	Read word count per DMA event (32-bit). When the Read FIFO has space for at least RNUMEVT words of data, then an AREVT (receive DMA event) is generated to the host/DMA controller. This value should be set to a non-zero integer multiple of the number of serializers enabled as receivers. This value must be set prior to enabling the Read FIFO. 0h = 0 words 1h = 1 word 2h = 2 words 3h - 40h = 3 to 16 words 41h - FFh = Reserved
7-0	RNUMDMA	R/W	4h	Read word count per transfer (32-bit words). Upon a receive DMA event from the McASP, RNUMDMA words are transferred from the Read FIFO to the McASP. This value must equal the number of McASP serializers used as receivers. This value must be set prior to enabling the Read FIFO. 0h = 0 words 1h = 1 word 2h = 2 words 3h - 10h = 3 to 16 words 11h - FFh = Reserved

Copyright © 2017, Texas Instruments Incorporated

12.5.5 RFIFOSTS Register (Offset = 1Ch) [reset = 0h]

RFIFOSTS is shown in Figure 12-8 and described in Table 12-10.

Return to Summary Table.

Figure 12-8. RFIFOSTS Register

31	30	29	28	27	26	25	24	23	22	21	20	19	18	17	16	15	14	13	12	11	10	9	8	7	6	5	4	3	2	1	0
RESERVED																								RLVL							
R-0h																								R-0h							

LEGEND: R/W = Read/Write; R = Read only; W1toCl = Write 1 to clear bit; *-n* = value after reset

Table 12-10. RFIFOSTS Register Field Descriptions

Bit	Field	Type	Reset	Description
31-8	RESERVED	R	0h	Reserved. The reserved bit location always returns the default value. A value written to this field has no effect. If writing to this field, always write the default value for future device compatibility.
7-0	RLVL	R	0h	Read level (read-only). Number of 32-bit words currently in the Read FIFO. 0h = 0 words currently in Read FIFO. 1h = 1 word currently in Read FIFO. 2h = 2 words currently in Read FIFO. 3h - 40h = 3 to 64 words currently in Read FIFO. 41h - FFh = Reserved

Copyright © 2017, Texas Instruments Incorporated

12.5.6 GBLCTL Register (Offset = 44h) [reset = 0h]

GBLCTL is shown in Figure 12-9 and described in Table 12-11.

Return to Summary Table.

The global control register (GBLCTL) provides initialization of the transmit and receive sections.

The bit fields in GBLCTL are synchronized and latched by the corresponding clocks (ACLKX for bits 12-8 and ACLKR for bits 4-0). Before GBLCTL is programmed, ensure that serial clocks are running. If the corresponding external serial clocks, ACLKX and ACLKR, are not yet running, select the internal serial clock source in AHCLKXCTL, AHCLKRCTL, ACLKXCTL, and ACLKRCTL before GBLCTL is programmed. Also, after programming any bits in GBLCTL do not proceed until you have read back from GBLCTL and verified that the bits are latched in GBLCTL.

Figure 12-9. GBLCTL Register

31	30	29	28	27	26	25	24
RESERVED							
R-0h							
23	22	21	20	19	18	17	16
RESERVED							
R-0h							
15	14	13	12	11	10	9	8
RESERVED			XFRST	XSMRST	XSRCLR	XHCLKRST	XCLKRST
R-0h			R/W-0h	R/W-0h	R/W-0h	R/W-0h	R/W-0h
7	6	5	4	3	2	1	0
RESERVED			RFRST	RSMRST	RSRCLR	RHCLKRST	RCLKRST
R-0h			R/W-0h	R/W-0h	R/W-0h	R/W-0h	R/W-0h

LEGEND: R/W = Read/Write; R = Read only; W1toCl = Write 1 to clear bit; *-n* = value after reset

Table 12-11. GBLCTL Register Field Descriptions

Bit	Field	Type	Reset	Description
31-13	RESERVED	R	0h	Reserved. The reserved bit location always returns the default value. A value written to this field has no effect. If writing to this field, always write the default value for future device compatibility.
12	XFRST	R/W	0h	Transmit frame sync generator reset enable bit. 0h = Transmit frame sync generator is reset. 1h = Transmit frame sync generator is active. When released from reset, the transmit frame sync generator begins counting serial clocks and generating frame sync as programmed.
11	XSMRST	R/W	0h	Transmit state machine reset enable bit. 0h = Transmit state machine is held in reset. AXR[n] pin state: If PFUNC[n] = 0 and PDIR[n] = 1; then the serializer drives the AXR[n] pin to the state specified for inactive time slot (as determined by DISMOD bits in SRCTL). 1h = Transmit state machine is released from reset. When released from reset, the transmit state machine immediately transfers data from XRBUF[n] to XRSR[n]. The transmit state machine sets the underrun flag (XUNDRN) in XSTAT, if XRBUF[n] have not been preloaded with data before reset is released. The transmit state machine also immediately begins detecting frame sync and is ready to transmit. Transmit TDM time slot begins at slot 0 after reset is released.

Copyright © 2017, Texas Instruments Incorporated

Table 12-11. GBLCTL Register Field Descriptions (continued)

Bit	Field	Type	Reset	Description
10	XSRCLR	R/W	0h	Transmit serializer clear enable bit. By clearing then setting this bit, the transmit buffer is flushed to an empty state (XDATA = 1). If XSMRST = 1, XSRCLR = 1, XDATA = 1, and XBUF is not loaded with new data before the start of the next active time slot, an underrun will occur. 0h = Transmit serializers are cleared. 1h = Transmit serializers are active. When the transmit serializers are first taken out of reset (XSRCLR changes from 0 to 1), the transmit data ready bit (XDATA) in XSTAT is set to indicate XBUF is ready to be written.
9	XHCLKRST	R/W	0h	Transmit high-frequency clock divider reset enable bit. 0h = Transmit high-frequency clock divider is held in reset. 1h = Transmit high-frequency clock divider is running.
8	XCLKRST	R/W	0h	Transmit clock divider reset enable bit. 0h = Transmit clock divider is held in reset. When the clock divider is in reset, it passes through a divide-by-1 of its input. 1h = Transmit clock divider is running.
7-5	RESERVED	R	0h	Reserved. The reserved bit location always returns the default value. A value written to this field has no effect. If writing to this field, always write the default value for future device compatibility.
4	RFRST	R/W	0h	Receive frame sync generator reset enable bit. 0h = Receive frame sync generator is reset. 1h = Receive frame sync generator is active. When released from reset, the receive frame sync generator begins counting serial clocks and generating frame sync as programmed.
3	RSMRST	R/W	0h	Receive state machine reset enable bit. 0h = Receive state machine is held in reset. 1h = Receive state machine is released from reset. When released from reset, the receive state machine immediately begins detecting frame sync and is ready to receive. Receive TDM time slot begins at slot 0 after reset is released.
2	RSRCLR	R/W	0h	Receive serializer clear enable bit. By clearing then setting this bit, the receive buffer is flushed. 0h = Receive serializers are cleared. 1h = Receive serializers are active.
1	RHCLKRST	R/W	0h	Receive high-frequency clock divider reset enable bit. 0h = Receive high-frequency clock divider is held in reset. 1h = Receive high-frequency clock divider is running.
0	RCLKRST	R/W	0h	Receive high-frequency clock divider reset enable bit. 0h = Receive clock divider is held in reset. When the clock divider is in reset, it passes through a divide-by-1 of its input. 1h = Receive clock divider is running.

Copyright © 2017, Texas Instruments Incorporated

12.5.7 RGBLCTL Register (Offset = 60h) [reset = 0h]

RGBLCTL is shown in Figure 12-10 and described in Table 12-12.

Return to Summary Table.

Alias of the global control register (GBLCTL). Writing to the receiver global control register (RGBLCTL) affects only the receive bits of GBLCTL (bits 4-0). Reads from RGBLCTL return the value of GBLCTL. RGBLCTL allows the receiver to be reset independently from the transmitter. See Section 3.8 for a detailed description of GBLCTL.

Figure 12-10. RGBLCTL Register

31	30	29	28	27	26	25	24
RESERVED							
R-0h							
23	22	21	20	19	18	17	16
RESERVED							
R-0h							
15	14	13	12	11	10	9	8
RESERVED			XFRST	XSMRST	XSRCLR	XHCLKRST	XCLKRST
R-0h			R-0h	R-0h	R-0h	R-0h	R-0h
7	6	5	4	3	2	1	0
RESERVED			RFRST	RSMRST	RSRCLR	RHCLKRST	RCLKRST
R-0h			R/W-0h	R/W-0h	R/W-0h	R/W-0h	R/W-0h

LEGEND: R/W = Read/Write; R = Read only; W1toCl = Write 1 to clear bit; *-n* = value after reset

Table 12-12. RGBLCTL Register Field Descriptions

Bit	Field	Type	Reset	Description
31-13	RESERVED	R	0h	Reserved. The reserved bit location always returns the default value. A value written to this field has no effect. If writing to this field, always write the default value for future device compatibility.
12	XFRST	R	0h	Transmit frame sync generator reset enable bit. A read of this bit returns the XFRST bit value of GBLCTL. Writes have no effect.
11	XSMRST	R	0h	Transmit state machine reset enable bit. A read of this bit returns the XSMRST bit value of GBLCTL. Writes have no effect.
10	XSRCLR	R	0h	Transmit serializer clear enable bit. A read of this bit returns the XSRCLR bit value of GBLCTL. Writes have no effect.
9	XHCLKRST	R	0h	Transmit high-frequency clock divider reset enable bit. A read of this bit returns the XHCLKRST bit value of GBLCTL. Writes have no effect.
8	XCLKRST	R	0h	Transmit clock divider reset enable bit. a read of this bit returns the XCLKRST bit value of GBLCTL. Writes have no effect.
7-5	RESERVED	R	0h	Reserved. The reserved bit location always returns the default value. A value written to this field has no effect. If writing to this field, always write the default value for future device compatibility.
4	RFRST	R/W	0h	Receive frame sync generator reset enable bit. A write to this bit affects the RFRST bit of GBLCTL. 0h = Receive frame sync generator is reset. 1h = Receive frame sync generator is active.
3	RSMRST	R/W	0h	Receive state machine reset enable bit. A write to this bit affects the RSMRST bit of GBLCTL. 0h = Receive state machine is held in reset. 1h = Receive state machine is released from reset.

Copyright © 2017, Texas Instruments Incorporated

Table 12-12. RGBLCTL Register Field Descriptions (continued)

Bit	Field	Type	Reset	Description
2	RSRCLR	R/W	0h	Receive serializer clear enable bit. A write to this bit affects the RSRCLR bit of GBLCTL. 0h = Receive serializers are cleared. 1h = Receive serializers are active.
1	RHCLKRST	R/W	0h	Receive high-frequency clock divider reset enable bit. A write to this bit affects the RHCLKRST bit of GBLCTL. 0h = Receive high-frequency clock divider is held in reset. 1h = Receive high-frequency clock divider is running.
0	RCLKRST	R/W	0h	Receive clock divider reset enable bit. A write to this bit affects the RCLKRST bit of GBLCTL. 0h = Receive clock divider is held in reset. 1h = Receive clock divider is running.

Copyright © 2017, Texas Instruments Incorporated

12.5.8 RMASK Register (Offset = 64h) [reset = 0h]

RMASK is shown in Figure 12-11 and described in Table 12-13.

Return to Summary Table.

The receive format unit bit mask register (RMASK) determines which bits of the received data are masked off and padded with a known value before being read by the CPU or DMA.

Figure 12-11. RMASK Register

31	30	29	28	27	26	25	24	23	22	21	20	19	18	17	16	15	14	13	12	11	10	9	8	7	6	5	4	3	2	1	0
RMASK[31-0]																															
R/W-0h																															

LEGEND: R/W = Read/Write; R = Read only; W1toCl = Write 1 to clear bit; *-n* = value after reset

Table 12-13. RMASK Register Field Descriptions

Bit	Field	Type	Reset	Description
31-0	RMASK[31-0]	R/W	0h	Receive data mask enable bit. 0h = Corresponding bit of receive data (after passing through reverse and rotate units) is masked out and then padded with the selected bit pad value (RPAD and RPBIT bits in RFMT). 1h = Corresponding bit of receive data (after passing through reverse and rotate units) is returned to CPU or DMA.

Copyright © 2017, Texas Instruments Incorporated

12.5.9 RFMT Register (Offset = 68h) [reset = 0h]

RFMT is shown in Figure 12-12 and described in Table 12-14.

Return to Summary Table.

The receive bit stream format register (RFMT) configures the receive data format.

Figure 12-12. RFMT Register

31	30	29	28	27	26	25	24
RESERVED							
R-0h							
23	22	21	20	19	18	17	16
RESERVED						RDATDLY	
R-0h						R/W-0h	
15	14	13	12	11	10	9	8
RRVRS	RESERVED			RPBIT			
R/W-0h	R-0h			R/W-0h			
7	6	5	4	3	2	1	0
RSSZ				RBUSEL	RESERVED		
R/W-0h				R/W-0h	R-0h		

LEGEND: R/W = Read/Write; R = Read only; W1toCl = Write 1 to clear bit; *-n* = value after reset

Table 12-14. RFMT Register Field Descriptions

Bit	Field	Type	Reset	Description
31-18	RESERVED	R	0h	Reserved. The reserved bit location always returns the default value. A value written to this field has no effect. If writing to this field, always write the default value for future device compatibility.
17-16	RDATDLY	R/W	0h	Receive bit delay. 0h = Reserved 1h = 2-bit delay. The first receive data bit, AXR[n], occurs one ACLKR cycle after the receive frame sync (AFSR). 2h = Reserved 3h = Reserved
15	RRVRS	R/W	0h	Receive serial bitstream order. 0h = Reserved 1h = Bitstream is MSB first. Bit reversal is performed in receive format bit reverse unit.
14-13	RESERVED	R	0h	Reserved. The reserved bit location always returns the default value. A value written to this field has no effect. If writing to this field, always write the default value for future device compatibility.
12-8	RPBIT	R/W	0h	RPBIT value determines which bit (as read by the CPU or DMA from RBUF[n]) is used to pad the extra bits. This field only applies when RPAD = 2h. 0h - 1Fh = Reserved

Copyright © 2017, Texas Instruments Incorporated

Table 12-14. RFMT Register Field Descriptions (continued)

Bit	Field	Type	Reset	Description
7-4	RSSZ	R/W	0h	Receive slot size. 0-2h = Reserved 3h = Slot size is 8 bits. 4h = Reserved 5h = Reserved 6h = Reserved 7h = Slot size is 16 bits. 8h = Reserved 9h = Reserved Ah = Reserved Bh = Slot size is 24 bits Ch = Reserved Dh = Reserved Eh = Reserved Fh = Reserved
3	RBUSEL	R/W	0h	Selects whether reads from serializer buffer XRBUF[n] originate from the peripheral configuration port or the DMA port. 0h = Reads from XRBUF[n] originate on DMA port. Reads from XRBUF[n] on the peripheral configuration port are ignored. 1h = Reads from XRBUF[n] originate on peripheral configuration port. Reads from XRBUF[n] on the DMA port are ignored.
2-0	RESERVED	R	0h	Reserved. The reserved bit location always returns the default value. A value written to this field has no effect. If writing to this field, always write the default value for future device compatibility.

Copyright © 2017, Texas Instruments Incorporated

12.5.10 AFSRCTL Register (Offset = 6Ch) [reset = 0h]

AFSRCTL is shown in Figure 12-13 and described in Table 12-15.

Return to Summary Table.

The receive frame sync control register (AFSRCTL) configures the receive frame sync (AFSR).

Figure 12-13. AFSRCTL Register

31	30	29	28	27	26	25	24
RESERVED							
R-0h							
23	22	21	20	19	18	17	16
RESERVED							
R-0h							
15	14	13	12	11	10	9	8
RMOD							
R/W-0h							
7	6	5	4	3	2	1	0
RMOD	RESERVED		FRWID	RESERVED		FSRM	FSRP
R/W-0h	R-0h		R/W-0h	R-0h		R/W-0h	R/W-0h

LEGEND: R/W = Read/Write; R = Read only; W1toCl = Write 1 to clear bit; *-n* = value after reset

Table 12-15. AFSRCTL Register Field Descriptions

Bit	Field	Type	Reset	Description
31-16	RESERVED	R	0h	Reserved. The reserved bit location always returns the default value. A value written to this field has no effect. If writing to this field, always write the default value for future device compatibility.
15-7	RMOD	R/W	0h	Receive frame sync mode select bits. 0h = Reserved 1h = Reserved 2h = 2-slot TDM (I2S mode)
6-5	RESERVED	R	0h	Reserved. The reserved bit location always returns the default value. A value written to this field has no effect. If writing to this field, always write the default value for future device compatibility.
4	FRWID	R/W	0h	Receive frame sync width select bit indicates the width of the receive frame sync (AFSR) during its active period. 0h = Reserved 1h = Single word
3-2	RESERVED	R	0h	Reserved. The reserved bit location always returns the default value. A value written to this field has no effect. If writing to this field, always write the default value for future device compatibility.
1	FSRM	R/W	0h	Receive frame sync generation select bit. 0h = Externally-generated receive frame sync 1h = Internally-generated receive frame sync
0	FSRP	R/W	0h	Receive frame sync polarity select bit. 0h = Reserved 1h = A falling edge on receive frame sync (AFSR) indicates the beginning of a frame.

Copyright © 2017, Texas Instruments Incorporated

12.5.11 RTDM Register (Offset = 78h) [reset = 0h]

RTDM is shown in Figure 12-14 and described in Table 12-16.

Return to Summary Table.

The receive TDM time slot register (RTDM) specifies which TDM time slot the receiver is active.

Figure 12-14. RTDM Register

31	30	29	28	27	26	25	24
RESERVED							
R/W-0h							
23	22	21	20	19	18	17	16
RESERVED							
R/W-0h							
15	14	13	12	11	10	9	8
RESERVED							
R/W-0h							
7	6	5	4	3	2	1	0
RESERVED						RTDMS1	RTDMS0
R/W-0h						R/W-0h	R/W-0h

LEGEND: R/W = Read/Write; R = Read only; W1toCl = Write 1 to clear bit; *-n* = value after reset

Table 12-16. RTDM Register Field Descriptions

Bit	Field	Type	Reset	Description
31-2	RESERVED	R/W	0h	Reserved. The reserved bit location always returns the default value. A value written to this field has no effect. If writing to this field, always write the default value for future device compatibility.
1	RTDMS1	R/W	0h	Receiver mode enable for TDM slot 1. 0h = Receive TDM time slot 1 is inactive. The receive serializer does not shift in data during this slot. 1h = Receive TDM time slot 1 is active. The receive serializer shifts in data during this slot.
0	RTDMS0	R/W	0h	Receiver mode enable for TDM slot 0. 0h = Receive TDM time slot 0 is inactive. The receive serializer does not shift in data during this slot. 1h = Receive TDM time slot 0 is active. The receive serializer shifts in data during this slot.

Copyright © 2017, Texas Instruments Incorporated

12.5.12 RINTCTL Register (Offset = 7Ch) [reset = 0h]

RINTCTL is shown in Figure 12-15 and described in Table 12-17.

Return to Summary Table.

The receiver interrupt control register (RINTCTL) controls generation of the McASP receive interrupt (RINT). When the register bit(s) is set to 1, the occurrence of the enabled McASP condition(s) generates RINT. See Section 12.5.23 for a description of the interrupt conditions.

Figure 12-15. RINTCTL Register

31	30	29	28	27	26	25	24
RESERVED							
R-0h							
23	22	21	20	19	18	17	16
RESERVED							
R-0h							
15	14	13	12	11	10	9	8
RESERVED							
R-0h							
7	6	5	4	3	2	1	0
RSTAFRM	RESERVED	RDATA	RLAST	RESERVED		RSYNCERR	ROVRN
R/W-0h	R-0h	R/W-0h	R/W-0h	R-0h		R/W-0h	R/W-0h

LEGEND: R/W = Read/Write; R = Read only; W1toCl = Write 1 to clear bit; -*n* = value after reset

Table 12-17. RINTCTL Register Field Descriptions

Bit	Field	Type	Reset	Description
31-8	RESERVED	R	0h	Reserved. The reserved bit location always returns the default value. A value written to this field has no effect. If writing to this field, always write the default value for future device compatibility.
7	RSTAFRM	R/W	0h	Receive start of frame interrupt enable bit. 0h = Interrupt is disabled. A receive start of frame interrupt does not generate a McASP receive interrupt (RINT). 1h = Interrupt is enabled. A receive start of frame interrupt generates a McASP receive interrupt (RINT).
6	RESERVED	R	0h	Reserved. The reserved bit location always returns the default value. A value written to this field has no effect. If writing to this field, always write the default value for future device compatibility.
5	RDATA	R/W	0h	Receive data ready interrupt enable bit. 0h = Interrupt is disabled. A receive data ready interrupt does not generate a McASP receive interrupt (RINT). 1h = Interrupt is enabled. A receive data ready interrupt generates a McASP receive interrupt (RINT).
4	RLAST	R/W	0h	Receive last slot interrupt enable bit. 0h = Interrupt is disabled. A receive last slot interrupt does not generate a McASP receive interrupt (RINT). 1h = Interrupt is enabled. A receive last slot interrupt generates a McASP receive interrupt (RINT).
3-2	RESERVED	R	0h	Reserved. The reserved bit location always returns the default value. A value written to this field has no effect. If writing to this field, always write the default value for future device compatibility.
1	RSYNCERR	R/W	0h	Unexpected receive frame sync interrupt enable bit. 0h = Interrupt is disabled. An unexpected receive frame sync interrupt does not generate a McASP receive interrupt (RINT). 1h = Interrupt is enabled. An unexpected receive frame sync interrupt generates a McASP receive interrupt (RINT).

Copyright © 2017, Texas Instruments Incorporated

Table 12-17. RINTCTL Register Field Descriptions (continued)

Bit	Field	Type	Reset	Description
0	ROVRN	R/W	0h	Receiver overrun interrupt enable bit. 0h = Interrupt is disabled. A receiver overrun interrupt does not generate a McASP receive interrupt (RINT). 1h = Interrupt is enabled. A receiver overrun interrupt generates a McASP receive interrupt (RINT).

Copyright © 2017, Texas Instruments Incorporated

12.5.13 RSTAT Register (Offset = 80h) [reset = 0h]

RSTAT is shown in Figure 12-16 and described in Table 12-18.

Return to Summary Table.

The receiver status register (RSTAT) provides the receiver status and receive TDM time slot number. If the McASP logic attempts to set an interrupt flag in the same cycle that the CPU writes to the flag to clear it, the McASP logic has priority and the flag remains set. This also causes a new interrupt request to be generated.

Figure 12-16. RSTAT Register

31	30	29	28	27	26	25	24
RESERVED							
R-0h							
23	22	21	20	19	18	17	16
RESERVED							
R-0h							
15	14	13	12	11	10	9	8
RESERVED							RERR
R-0h							R/W-0h
7	6	5	4	3	2	1	0
RDMAERR	RSTAFRM	RDATA	RLAST	RTDMSLOT	RESERVED	RSYNCERR	ROVRN
R/W-0h	R/W-0h	R/W-0h	R/W-0h	R-0h	R-0h	R/W-0h	R/W-0h

LEGEND: R/W = Read/Write; R = Read only; W1toCl = Write 1 to clear bit; -*n* = value after reset

Table 12-18. RSTAT Register Field Descriptions

Bit	Field	Type	Reset	Description
31-9	RESERVED	R	0h	Reserved. The reserved bit location always returns the default value. A value written to this field has no effect. If writing to this field, always write the default value for future device compatibility.
8	RERR	R/W	0h	RERR bit always returns a logic-OR of: ROVRN | RSYNCERR | RCKFAIL | RDMAERR Allows a single bit to be checked to determine if a receiver error interrupt has occurred. 0h = No errors have occurred. 1h = An error has occurred.
7	RDMAERR	R/W	0h	Receive DMA error flag. RDMAERR is set when the CPU or DMA reads more serializers through the DMA port in a given time slot than were programmed as receivers. Causes a receive interrupt (RINT), if this bit is set and RDMAERR in RINTCTL is set. This bit is cleared by writing a 1 to this bit. Writing a 0 to this bit has no effect. 0h = Receive DMA error did not occur. 1h = Receive DMA error did occur.
6	RSTAFRM	R/W	0h	Receive start of frame flag. Causes a receive interrupt (RINT), if this bit is set and RSTAFRM in RINTCTL is set. This bit is cleared by writing a 1 to this bit. Writing a 0 to this bit has no effect. 0h = No new receive frame sync (AFSR) is detected. 1h = A new receive frame sync (AFSR) is detected.
5	RDATA	R/W	0h	Receive data ready flag. Causes a receive interrupt (RINT), if this bit is set and RDATA in RINTCTL is set. This bit is cleared by writing a 1 to this bit. Writing a 0 to this bit has no effect. 0h = No new data in RBUF. 1h = Data is transferred from XRSR to RBUF and ready to be serviced by the CPU or DMA. When RDATA is set, it always causes a DMA event (AREVT).

Copyright © 2017, Texas Instruments Incorporated

Table 12-18. RSTAT Register Field Descriptions (continued)

Bit	Field	Type	Reset	Description
4	RLAST	R/W	0h	Receive last slot flag. RLAST is set along with RDATA, if the current slot is the last slot in a frame. Causes a receive interrupt (RINT), if this bit is set and RLAST in RINTCTL is set. This bit is cleared by writing a 1 to this bit. Writing a 0 to this bit has no effect. 0h = Current slot is not the last slot in a frame. 1h = Current slot is the last slot in a frame. RDATA is also set.
3	RTDMSLOT	R	0h	Returns the LSB of RSLOT. Allows a single read of RSTAT to determine whether the current TDM time slot is even or odd. 0h = Current TDM time slot is odd. 1h = Current TDM time slot is even.
2	RESERVED	R	0h	Reserved. The reserved bit location always returns the default value. A value written to this field has no effect. If writing to this field, always write the default value for future device compatibility.
1	RSYNCERR	R/W	0h	Unexpected receive frame sync flag. RSYNCERR is set when a new receive frame sync (AFSR) occurs before it is expected. Causes a receive interrupt (RINT), if this bit is set and RSYNCERR in RINTCTL is set. This bit is cleared by writing a 1 to this bit. Writing a 0 to this bit has no effect. 0h = Unexpected receive frame sync did not occur. 1h = Unexpected receive frame sync did occur.
0	ROVRN	R/W	0h	Receiver overrun flag. ROVRN is set when the receive serializer is instructed to transfer data from XRSR to RBUF, but the former data in RBUF has not yet been read by the CPU or DMA. Causes a receive interrupt (RINT), if this bit is set and ROVRN in RINTCTL is set. This bit is cleared by writing a 1 to this bit. Writing a 0 to this bit has no effect. 0h = Receiver overrun did not occur. 1h = Receiver overrun did occur.

Copyright © 2017, Texas Instruments Incorporated

12.5.14 RSLOT Register (Offset = 84h) [reset = 0h]

RSLOT is shown in Figure 12-17 and described in Table 12-19.

Return to Summary Table.

The current receive TDM time slot register (RSLOT) indicates the current time slot for the receive data frame.

Figure 12-17. RSLOT Register

31	30	29	28	27	26	25	24	23	22	21	20	19	18	17	16	15	14	13	12	11	10	9	8	7	6	5	4	3	2	1	0
RESERVED																							RSLOTCNT								
R-0h																							R-0h								

LEGEND: R/W = Read/Write; R = Read only; W1toCl = Write 1 to clear bit; *-n* = value after reset

Table 12-19. RSLOT Register Field Descriptions

Bit	Field	Type	Reset	Description
31-9	RESERVED	R	0h	Reserved. The reserved bit location always returns the default value. A value written to this field has no effect. If writing to this field, always write the default value for future device compatibility.
8-0	RSLOTCNT	R	0h	Current receive time slot count. Legal values: 0 or 1

Copyright © 2017, Texas Instruments Incorporated

12.5.15 REVTCTL Register (Offset = 8Ch) [reset = 0h]

REVTCTL is shown in Figure 12-18 and described in Table 12-20.

Return to Summary Table.

CAUTION

Accessing REVTCTL when not implemented on a specific DSP may cause improper device operation.

Figure 12-18. REVTCTL Register

31	30	29	28	27	26	25	24
RESERVED							
R-0h							
23	22	21	20	19	18	17	16
RESERVED							
R-0h							
15	14	13	12	11	10	9	8
RESERVED							
R-0h							
7	6	5	4	3	2	1	0
RESERVED							RDATDMA
R-0h							R/W-0h

LEGEND: R/W = Read/Write; R = Read only; W1toCl = Write 1 to clear bit; *-n* = value after reset

Table 12-20. REVTCTL Register Field Descriptions

Bit	Field	Type	Reset	Description
31-1	RESERVED	R	0h	Reserved. The reserved bit location always returns the default value. A value written to this field has no effect. If writing to this field, always write the default value for future device compatibility.
0	RDATDMA	R/W	0h	Receive data DMA request enable bit. If writing to this field, always write the default value of 0. 0h = Receive data DMA request is enabled. 1h = Reserved.

Copyright © 2017, Texas Instruments Incorporated

12.5.16 XGBLCTL Register (Offset = A0h) [reset = 0h]

XGBLCTL is shown in Figure 12-19 and described in Table 12-21.

Return to Summary Table.

Alias of the global control register (GBLCTL). Writing to the transmitter global control register (XGBLCTL) affects only the transmit bits of GBLCTL (bits 12-8). Reads from XGBLCTL return the value of GBLCTL. XGBLCTL allows the transmitter to be reset independently from the receiver.

Figure 12-19. XGBLCTL Register

31	30	29	28	27	26	25	24
RESERVED							
R-0h							
23	22	21	20	19	18	17	16
RESERVED							
R-0h							
15	14	13	12	11	10	9	8
RESERVED			XFRST	XSMRST	XSRCLR	XHCLKRST	XCLKRST
R-0h			R/W-0h	R/W-0h	R/W-0h	R/W-0h	R/W-0h
7	6	5	4	3	2	1	0
RESERVED			RFRST	RSMRST	RSRCLR	RHCLKRST	RCLKRST
R-0h			R-0h	R-0h	R-0h	R-0h	R-0h

LEGEND: R/W = Read/Write; R = Read only; W1toCl = Write 1 to clear bit; *-n* = value after reset

Table 12-21. XGBLCTL Register Field Descriptions

Bit	Field	Type	Reset	Description
31-13	RESERVED	R	0h	Reserved. The reserved bit location always returns the default value. A value written to this field has no effect. If writing to this field, always write the default value for future device compatibility.
12	XFRST	R/W	0h	Transmit frame sync generator reset enable bit. A write to this bit affects the XFRST bit of GBLCTL. 0h = Transmit frame sync generator is reset. 1h = Transmit frame sync generator is active.
11	XSMRST	R/W	0h	Transmit state machine reset enable bit. A write to this bit affects the XSMRST bit of GBLCTL. 0h = Transmit state machine is held in reset. 1h = Transmit state machine is released from reset.
10	XSRCLR	R/W	0h	Transmit serializer clear enable bit. A write to this bit affects the XSRCLR bit of GBLCTL. 0h = Transmit serializers are cleared. 1h = Transmit serializers are active.
9	XHCLKRST	R/W	0h	Transmit high-frequency clock divider reset enable bit. A write to this bit affects the XHCLKRST bit of GBLCTL. 0h = Transmit high-frequency clock divider is held in reset. 1h = Transmit high-frequency clock divider is running.
8	XCLKRST	R/W	0h	Transmit clock divider reset enable bit. A write to this bit affects the XCLKRST bit of GBLCTL. 0h = Transmit clock divider is held in reset. 1h = Transmit clock divider is running.
7-5	RESERVED	R	0h	Reserved. The reserved bit location always returns the default value. A value written to this field has no effect. If writing to this field, always write the default value for future device compatibility.
4	RFRST	R	0h	Receive frame sync generator reset enable bit. A read of this bit returns the RFRST bit value of GBLCTL. Writes have no effect.

Copyright © 2017, Texas Instruments Incorporated

Table 12-21. XGBLCTL Register Field Descriptions (continued)

Bit	Field	Type	Reset	Description
3	RSMRST	R	0h	Receive state machine reset enable bit. A read of this bit returns the RSMRST bit value of GBLCTL. Writes have no effect.
2	RSRCLR	R	0h	Receive serializer clear enable bit. A read of this bit returns the RSRSCLR bit value of GBLCTL. Writes have no effect.
1	RHCLKRST	R	0h	Receive high-frequency clock divider reset enable bit. A read of this bit returns the RHCLKRST bit value of GBLCTL. Writes have no effect.
0	RCLKRST	R	0h	Receive clock divider reset enable bit. A read of this bit returns the RCLKRST bit value of GBLCTL. Writes have no effect.

Copyright © 2017, Texas Instruments Incorporated

12.5.17 XMASK Register (Offset = A4h) [reset = 0h]

XMASK is shown in Figure 12-20 and described in Table 12-22.

Return to Summary Table.

The transmit format unit bit mask register (XMASK) determines which bits of the transmitted data are masked off and padded with a known value before being shifted out the McASP.

Figure 12-20. XMASK Register

31	30	29	28	27	26	25	24	23	22	21	20	19	18	17	16	15	14	13	12	11	10	9	8	7	6	5	4	3	2	1	0
XMASK[31-0]																															
R/W-0h																															

LEGEND: R/W = Read/Write; R = Read only; W1toCl = Write 1 to clear bit; *-n* = value after reset

Table 12-22. XMASK Register Field Descriptions

Bit	Field	Type	Reset	Description
31-0	XMASK[31-0]	R/W	0h	Transmit data mask enable bit. 0h = Corresponding bit of transmit data (before passing through reverse and rotate units) is masked out and then padded with the selected bit pad value (XPAD and XPBIT bits in XFMT), which is transmitted out the McASP in place of the original bit. 1h = Corresponding bit of transmit data (before passing through reverse and rotate units) is transmitted out the McASP.

Copyright © 2017, Texas Instruments Incorporated

12.5.18 XFMT Register (Offset = A8h) [reset = 0h]

XFMT is shown in Figure 12-21 and described in Table 12-23.

Return to Summary Table.

The transmit bit stream format register (XFMT) configures the transmit data format.

Figure 12-21. XFMT Register

31	30	29	28	27	26	25	24
RESERVED							
R-0h							
23	22	21	20	19	18	17	16
RESERVED						XDATDLY	
R-0h						R/W-0h	
15	14	13	12	11	10	9	8
XRVRS	RESERVED						
R/W-0h	R-0h						
7	6	5	4	3	2	1	0
XSSZ				XBUSEL		XROT	
R/W-0h				R/W-0h		R/W-0h	

LEGEND: R/W = Read/Write; R = Read only; W1toCl = Write 1 to clear bit; *-n* = value after reset

Table 12-23. XFMT Register Field Descriptions

Bit	Field	Type	Reset	Description
31-18	RESERVED	R	0h	Reserved. The reserved bit location always returns the default value. A value written to this field has no effect. If writing to this field, always write the default value for future device compatibility.
17-16	XDATDLY	R/W	0h	Transmit sync bit delay.
15	XRVRS	R/W	0h	Transmit serial bitstream order. 0h = Reserved 1h = Bitstream is MSB first. Bit reversal is performed in receive format bit reverse unit.
14-8	RESERVED	R	0h	Reserved. The reserved bit location always returns the default value. A value written to this field has no effect. If writing to this field, always write the default value for future device compatibility.
7-4	XSSZ	R/W	0h	Transmit slot size. 0-2h = Reserved 3h = Slot size is 8 bits. 4h = Reserved 5h = Reserved 6h = Reserved 7h = Slot size is 16 bits. 8h = Reserved 9h = Reserved Ah = Reserved Bh = Slot size is 24 bits Ch = Reserved Dh = Reserved Eh = Reserved Fh = Reserved

Copyright © 2017, Texas Instruments Incorporated

Table 12-23. XFMT Register Field Descriptions (continued)

Bit	Field	Type	Reset	Description
3	XBUSEL	R/W	0h	Selects whether writes to serializer buffer XRBUF[n] originate from the peripheral configuration port or the DMA port. 0h = Writes to XRBUF[n] originate on DMA port. Writes to XRBUF[n] on the peripheral configuration port are ignored with no effect to the McASP. 1h = Writes to XRBUF[n] originate on peripheral configuration port. Writes to XRBUF[n] on the DMA port are ignored with no effect to the McASP.
2-0	XROT	R/W	0h	Right-rotation value for transmit rotate right format unit. 0h = Reserved 1h = Reserved 2h = Rotate right by 8 bit positions. 3h = Reserved 4h = Rotate right by 16 bit positions. 5h = Reserved 6h = Rotate right by 24 bit positions. 7h = Reserved

Copyright © 2017, Texas Instruments Incorporated

12.5.19 AFSXCTL Register (Offset = ACh) [reset = 0h]

AFSXCTL is shown in Figure 12-22 and described in Table 12-24.

Return to Summary Table.

The transmit frame sync control register (AFSXCTL) configures the transmit frame sync (AFSX).

Figure 12-22. AFSXCTL Register

31	30	29	28	27	26	25	24
RESERVED							
R-0h							
23	22	21	20	19	18	17	16
RESERVED							
R-0h							
15	14	13	12	11	10	9	8
XMOD							
R/W-0h							
7	6	5	4	3	2	1	0
XMOD	RESERVED		FXWID	RESERVED		FSXM	FSXP
R/W-0h	R-0h		R/W-0h	R-0h		R/W-0h	R/W-0h

LEGEND: R/W = Read/Write; R = Read only; W1toCl = Write 1 to clear bit; *-n* = value after reset

Table 12-24. AFSXCTL Register Field Descriptions

Bit	Field	Type	Reset	Description
31-16	RESERVED	R	0h	Reserved. The reserved bit location always returns the default value. A value written to this field has no effect. If writing to this field, always write the default value for future device compatibility.
15-7	XMOD	R/W	0h	Transmit frame sync mode select bits. 0h = Reserved 1h = Reserved 2h-20h = 2-slot TDM (I2S mode) 180h - 1FFh = Reserved
6-5	RESERVED	R	0h	Reserved. The reserved bit location always returns the default value. A value written to this field has no effect. If writing to this field, always write the default value for future device compatibility.
4	FXWID	R/W	0h	Transmit frame sync width select bit indicates the width of the transmit frame sync (AFSX) during its active period. 0h = Reserved 1h = Single word
3-2	RESERVED	R	0h	Reserved. The reserved bit location always returns the default value. A value written to this field has no effect. If writing to this field, always write the default value for future device compatibility.
1	FSXM	R/W	0h	Transmit frame sync generation select bit. 0h = Externally-generated transmit frame sync 1h = Internally-generated transmit frame sync
0	FSXP	R/W	0h	Transmit frame sync polarity select bit. 0h = Reserved 1h = A falling edge on transmit frame sync (AFSX) indicates the beginning of a frame.

Copyright © 2017, Texas Instruments Incorporated

12.5.20 ACLKXCTL Register (Offset = B0h) [reset = 60h]

ACLKXCTL is shown in Figure 12-23 and described in Table 12-25.

Return to Summary Table.

The transmit clock control register (ACLKXCTL) configures the transmit bit clock (ACLKX) and the transmit clock generator.

Figure 12-23. ACLKXCTL Register

31	30	29	28	27	26	25	24
RESERVED							
R-0h							
23	22	21	20	19	18	17	16
RESERVED							
R-0h							
15	14	13	12	11	10	9	8
RESERVED							
R-0h							
7	6	5	4	3	2	1	0
CLKXP	ASYNC	CLKXM	CLKXDIV				
R/W-0h	R/W-1h	R/W-1h	R/W-0h				

LEGEND: R/W = Read/Write; R = Read only; W1toCl = Write 1 to clear bit; *-n* = value after reset

Table 12-25. ACLKXCTL Register Field Descriptions

Bit	Field	Type	Reset	Description
31-8	RESERVED	R	0h	Reserved. The reserved bit location always returns the default value. A value written to this field has no effect. If writing to this field, always write the default value for future device compatibility.
7	CLKXP	R/W	0h	Transmit bitstream clock polarity select bit. 0h = Reserved 1h = Falling edge. External receiver samples data on the rising edge of the serial clock, so the transmitter must shift data out on the falling edge of the serial clock.
6	ASYNC	R/W	1h	Transmit/receive operation asynchronous enable bit. 0h = Synchronous. Transmit clock and frame sync provides the source for both the transmit and receive sections. Note that in this mode, the receive bit clock is an inverted version of the transmit bit clock. 1h = Reserved
5	CLKXM	R/W	1h	Transmit bit clock source bit. 0h = External transmit clock source from ACLKX pin. 1h = Internal transmit clock source from output of programmable bit clock divider.
4-0	CLKXDIV	R/W	0h	Transmit bit clock divide ratio bits determine the divide-down ratio from AHCLKX to ACLKX. 0h = Divide-by-1 1h = Divide-by-2 2h - 1Fh = Divide-by-3 to divide-by-32

Copyright © 2017, Texas Instruments Incorporated

12.5.21 AHCLKXCTL Register (Offset = B4h) [reset = 8000h]

AHCLKXCTL is shown in Figure 12-24 and described in Table 12-26.

Return to Summary Table.

The transmit high-frequency clock control register (AHCLKXCTL) configures the transmit high-frequency master clock (AHCLKX) and the transmit clock generator.

Figure 12-24. AHCLKXCTL Register

31	30	29	28	27	26	25	24
RESERVED							
R-0h							
23	22	21	20	19	18	17	16
RESERVED							
R-0h							
15	14	13	12	11	10	9	8
HCLKXM	RESERVED			HCLKXDIV			
R/W-1h	R-0h			R/W-0h			
7	6	5	4	3	2	1	0
HCLKXDIV							
R/W-0h							

LEGEND: R/W = Read/Write; R = Read only; W1toCl = Write 1 to clear bit; *-n* = value after reset

Table 12-26. AHCLKXCTL Register Field Descriptions

Bit	Field	Type	Reset	Description
31-16	RESERVED	R	0h	Reserved. The reserved bit location always returns the default value. A value written to this field has no effect. If writing to this field, always write the default value for future device compatibility.
15	HCLKXM	R/W	1h	Transmit high-frequency clock source bit. 0h = Reserved 1h = Internal transmit high-frequency clock source from output of programmable high clock divider.
14-12	RESERVED	R	0h	Reserved. The reserved bit location always returns the default value. A value written to this field has no effect. If writing to this field, always write the default value for future device compatibility.
11-0	HCLKXDIV	R/W	0h	Transmit high-frequency clock divide ratio bits determine the divide-down ratio from AUXCLK to AHCLKX. 0h = Divide-by-1 1h = Divide-by-2 2h - FFFh = Divide-by-3 to divide-by-4096

Copyright © 2017, Texas Instruments Incorporated

12.5.22 XTDM Register (Offset = B8h) [reset = 0h]

XTDM is shown in Figure 12-25 and described in Table 12-27.

Return to Summary Table.

The transmit TDM time slot register (XTDM) specifies in which TDM time slot the transmitter is active. TDM time slot counter range is extended to 384 slots (to support SPDIF blocks of 384 subframes). XTDM operates modulo 32, that is, XTDMS specifies the TDM activity for time slots 0, 32, 64, 96, 128, and so forth.

Figure 12-25. XTDM Register

31	30	29	28	27	26	25	24	23	22	21	20	19	18	17	16	15	14	13	12	11	10	9	8	7	6	5	4	3	2	1	0
XTDMS[31-0]																															
R/W-0h																															

LEGEND: R/W = Read/Write; R = Read only; W1toCl = Write 1 to clear bit; *-n* = value after reset

Table 12-27. XTDM Register Field Descriptions

Bit	Field	Type	Reset	Description
31-0	XTDMS[31-0]	R/W	0h	Transmitter mode during TDM time slot n. 0h = Transmit TDM time slot n is inactive. The transmit serializer does not shift out data during this slot. 1h = Transmit TDM time slot n is active. The transmit serializer shifts out data during this slot according to the serializer control register (SRCTL).

Copyright © 2017, Texas Instruments Incorporated

12.5.23 XINTCTL Register (Offset = BCh) [reset = 0h]

XINTCTL is shown in Figure 12-26 and described in Table 12-28.

Return to Summary Table.

The transmitter interrupt control register (XINTCTL) controls generation of the McASP transmit interrupt (XINT). When the register bit(s) is set to 1, the occurrence of the enabled McASP conditions generates XINT.

Figure 12-26. XINTCTL Register

31	30	29	28	27	26	25	24
RESERVED							
R-0h							
23	22	21	20	19	18	17	16
RESERVED							
R-0h							
15	14	13	12	11	10	9	8
RESERVED							
R-0h							
7	6	5	4	3	2	1	0
XSTAFRM	RESERVED	XDATA	XLAST	RESERVED		XSYNCERR	XUNDRN
R/W-0h	R-0h	R/W-0h	R/W-0h	R-0h		R/W-0h	R/W-0h

LEGEND: R/W = Read/Write; R = Read only; W1toCl = Write 1 to clear bit; *-n* = value after reset

Table 12-28. XINTCTL Register Field Descriptions

Bit	Field	Type	Reset	Description
31-8	RESERVED	R	0h	Reserved. The reserved bit location always returns the default value. A value written to this field has no effect. If writing to this field, always write the default value for future device compatibility.
7	XSTAFRM	R/W	0h	Transmit start of frame interrupt enable bit. 0h = Interrupt is disabled. A transmit start of frame interrupt does not generate a McASP transmit interrupt (XINT). 1h = Interrupt is enabled. A transmit start of frame interrupt generates a McASP transmit interrupt (XINT).
6	RESERVED	R	0h	Reserved. The reserved bit location always returns the default value. A value written to this field has no effect. If writing to this field, always write the default value for future device compatibility.
5	XDATA	R/W	0h	Transmit data ready interrupt enable bit. 0h = Interrupt is disabled. A transmit data ready interrupt does not generate a McASP transmit interrupt (XINT). 1h = Interrupt is enabled. A transmit data ready interrupt generates a McASP transmit interrupt (XINT).
4	XLAST	R/W	0h	Transmit last slot interrupt enable bit. 0h = Interrupt is disabled. A transmit last slot interrupt does not generate a McASP transmit interrupt (XINT). 1h = Interrupt is enabled. A transmit last slot interrupt generates a McASP transmit interrupt (XINT).
3-2	RESERVED	R	0h	Reserved. The reserved bit location always returns the default value. A value written to this field has no effect. If writing to this field, always write the default value for future device compatibility.
1	XSYNCERR	R/W	0h	Unexpected transmit frame sync interrupt enable bit. 0h = Interrupt is disabled. An unexpected transmit frame sync interrupt does not generate a McASP transmit interrupt (XINT). 1h = Interrupt is enabled. An unexpected transmit frame sync interrupt generates a McASP transmit interrupt (XINT).

Copyright © 2017, Texas Instruments Incorporated

Table 12-28. XINTCTL Register Field Descriptions (continued)

Bit	Field	Type	Reset	Description
0	XUNDRN	R/W	0h	Transmitter underrun interrupt enable bit. 0h = Interrupt is disabled. A transmitter underrun interrupt does not generate a McASP transmit interrupt (XINT). 1h = Interrupt is enabled. A transmitter underrun interrupt generates a McASP transmit interrupt (XINT).

Copyright © 2017, Texas Instruments Incorporated

12.5.24 XSTAT Register (Offset = C0h) [reset = 0h]

XSTAT is shown in Figure 12-27 and described in Table 12-29.

Return to Summary Table.

The transmitter status register (XSTAT) provides the transmitter status and transmit TDM time slot number. If the McASP logic attempts to set an interrupt flag in the same cycle that the CPU writes to the flag to clear it, the McASP logic has priority and the flag remains set. This also causes a new interrupt request to be generated.

Figure 12-27. XSTAT Register

31	30	29	28	27	26	25	24
RESERVED							
R-0h							
23	22	21	20	19	18	17	16
RESERVED							
R-0h							
15	14	13	12	11	10	9	8
RESERVED							XERR
R-0h							R/W-0h
7	6	5	4	3	2	1	0
RESERVED	XSTAFRM	XDATA	XLAST	XTDMSLOT	RESERVED	XSYNCERR	XUNDRN
R-0h	R/W-0h	R/W-0h	R/W-0h	R-0h	R-0h	R/W-0h	R/W-0h

LEGEND: R/W = Read/Write; R = Read only; W1toCl = Write 1 to clear bit; *-n* = value after reset

Table 12-29. XSTAT Register Field Descriptions

Bit	Field	Type	Reset	Description
31-9	RESERVED	R	0h	Reserved. The reserved bit location always returns the default value. A value written to this field has no effect. If writing to this field, always write the default value for future device compatibility.
8	XERR	R/W	0h	XERR bit always returns a logic-OR of: XUNDRN | XSYNCERR | XCKFAIL | XDMAERR Allows a single bit to be checked to determine if a transmitter error interrupt has occurred. 0h = No errors have occurred. 1h = An error has occurred.
7	RESERVED	R	0h	Reserved. The reserved bit location always returns the default value. A value written to this field has no effect. If writing to this field, always write the default value for future device compatibility.
6	XSTAFRM	R/W	0h	Transmit start of frame flag. Causes a transmit interrupt (XINT), if this bit is set and XSTAFRM in XINTCTL is set. This bit is cleared by writing a 1 to this bit. Writing a 0 has no effect. 0h = No new transmit frame sync (AFSX) is detected. 1h = A new transmit frame sync (AFSX) is detected.
5	XDATA	R/W	0h	Transmit data ready flag. Causes a transmit interrupt (XINT), if this bit is set and XDATA in XINTCTL is set. This bit is cleared by writing a 1 to this bit. Writing a 0 has no effect. 0h = XBUF is written and is full. 1h = Data is copied from XBUF to XRSR. XBUF is empty and ready to be written. XDATA is also set when the transmit serializers are taken out of reset. When XDATA is set, it always causes a DMA event (AXEVT).
4	XLAST	R/W	0h	Transmit last slot flag. XLAST is set along with XDATA, if the current slot is the last slot in a frame. Causes a transmit interrupt (XINT), if this bit is set and XLAST in XINTCTL is set. This bit is cleared by writing a 1 to this bit. Writing a 0 has no effect. 0h = Current slot is not the last slot in a frame. 1h = Current slot is the last slot in a frame. XDATA is also set.

Copyright © 2017, Texas Instruments Incorporated

Table 12-29. XSTAT Register Field Descriptions (continued)

Bit	Field	Type	Reset	Description
3	XTDMSLOT	R	0h	Returns the LSB of XSLOT. Allows a single read of XSTAT to determine whether the current TDM time slot is even or odd. 0h = Current TDM time slot is odd. 1h = Current TDM time slot is even.
2	RESERVED	R	0h	Reserved. The reserved bit location always returns the default value. A value written to this field has no effect. If writing to this field, always write the default value for future device compatibility.
1	XSYNCERR	R/W	0h	Unexpected transmit frame sync flag. XSYNCERR is set when a new transmit frame sync (AFSX) occurs before it is expected. Causes a transmit interrupt (XINT), if this bit is set and XSYNCERR in XINTCTL is set. This bit is cleared by writing a 1 to this bit. Writing a 0 has no effect. 0h = Unexpected transmit frame sync did not occur. 1h = Unexpected transmit frame sync did occur.
0	XUNDRN	R/W	0h	Transmitter underrun flag. XUNDRN is set when the transmit serializer is instructed to transfer data from XBUF to XRSR, but XBUF has not yet been serviced with new data since the last transfer. Causes a transmit interrupt (XINT), if this bit is set and XUNDRN in XINTCTL is set. This bit is cleared by writing a 1 to this bit. Writing a 0 has no effect. 0h = Transmitter underrun did not occur. 1h = Transmitter underrun did occur.

Copyright © 2017, Texas Instruments Incorporated

12.5.25 XSLOT Register (Offset = C4h) [reset = 17Fh]

XSLOT is shown in Figure 12-28 and described in Table 12-30.

Return to Summary Table.

The current transmit TDM time slot register (XSLOT) indicates the current time slot for the transmit data frame.

Figure 12-28. XSLOT Register

31	30	29	28	27	26	25	24	23	22	21	20	19	18	17	16	15	14	13	12	11	10	9	8	7	6	5	4	3	2	1	0
RESERVED																							XSLOTCNT								
R-0h																							R-17Fh								

LEGEND: R/W = Read/Write; R = Read only; W1toCl = Write 1 to clear bit; *-n* = value after reset

Table 12-30. XSLOT Register Field Descriptions

Bit	Field	Type	Reset	Description
31-9	RESERVED	R	0h	Reserved. The reserved bit location always returns the default value. A value written to this field has no effect. If writing to this field, always write the default value for future device compatibility.
8-0	XSLOTCNT	R	17Fh	Current transmit time slot count. Legal values: 0 to 1

Copyright © 2017, Texas Instruments Incorporated

12.5.26 XEVTCTL Register (Offset = CCh) [reset = 0h]

XEVTCTL is shown in Figure 12-29 and described in Table 12-31.

Return to Summary Table.

CAUTION

Accessing XEVTCTL when not implemented on a specific DSP may cause improper device operation.

Figure 12-29. XEVTCTL Register

31	30	29	28	27	26	25	24
RESERVED							
R-0h							
23	22	21	20	19	18	17	16
RESERVED							
R-0h							
15	14	13	12	11	10	9	8
RESERVED							
R-0h							
7	6	5	4	3	2	1	0
RESERVED							XDATDMA
R-0h							R/W-0h

LEGEND: R/W = Read/Write; R = Read only; W1toCl = Write 1 to clear bit; *-n* = value after reset

Table 12-31. XEVTCTL Register Field Descriptions

Bit	Field	Type	Reset	Description
31-1	RESERVED	R	0h	Reserved. The reserved bit location always returns the default value. A value written to this field has no effect. If writing to this field, always write the default value for future device compatibility.
0	XDATDMA	R/W	0h	Transmit data DMA request enable bit. If writing to this field, always write the default value of 0. 0h = Transmit data DMA request is enabled. 1h = Reserved.

Copyright © 2017, Texas Instruments Incorporated

12.5.27 SRCTLn Register (Offset = 180h) [reset = 0h]

SRCTLn is shown in Figure 12-30 and described in Table 12-32.

Return to Summary Table.

Each serializer on the McASP has a serializer control register (SRCTL). There are up to 16 serializers per McASP.

CAUTION

Accessing SRCTLn when not implemented on a specific DSP may cause improper device operation.

Figure 12-30. SRCTLn Registers

31	30	29	28	27	26	25	24
RESERVED							
R-0h							
23	22	21	20	19	18	17	16
RESERVED							
R-0h							
15	14	13	12	11	10	9	8
RESERVED							
R-0h							
7	6	5	4	3	2	1	0
RESERVED		RRDY	XRDY	DISMOD		SRMOD	
R-0h		R-0h	R-0h	R/W-0h		R/W-0h	

LEGEND: R/W = Read/Write; R = Read only; W1toCl = Write 1 to clear bit; *-n* = value after reset

Table 12-32. SRCTLn Register Field Descriptions

Bit	Field	Type	Reset	Description
31-6	RESERVED	R	0h	Reserved. The reserved bit location always returns the default value. A value written to this field has no effect. If writing to this field, always write the default value for future device compatibility.
5	RRDY	R	0h	Receive buffer ready bit. RRDY indicates the current receive buffer state. Always reads 0 when programmed as a transmitter or as inactive. If SRMOD bit is set to receive (2h), RRDY switches from 0 to 1 whenever data is transferred from XRSR to RBUF. 0h = Receive buffer (RBUF) is empty. 1h = Receive buffer (RBUF) contains data and must be read before the start of the next time slot or a receiver overrun occurs.
4	XRDY	R	0h	Transmit buffer ready bit. XRDY indicates the current transmit buffer state. Always reads 0 when programmed as a receiver or as inactive. If SRMOD bit is set to transmit (1h), XRDY switches from 0 to 1 when XSRCLR in GBLCTL is switched from 0 to 1 to indicate an empty transmitter. XRDY remains set until XSRCLR is forced to 0, data is written to the corresponding transmit buffer, or SRMOD bit is changed to receive (2h) or inactive (0). 0h = Transmit buffer (XBUF) contains data. 1h = Transmit buffer (XBUF) is empty and must be written before the start of the next time slot or a transmit underrun occurs.

Copyright © 2017, Texas Instruments Incorporated

Table 12-32. SRCTLn Register Field Descriptions (continued)

Bit	Field	Type	Reset	Description
3-2	DISMOD	R/W	0h	Serializer pin drive mode bit. Drive on pin when in inactive TDM slot of transmit mode or when serializer is inactive. This field only applies if the pin is configured as a McASP pin (PFUNC = 0). 0h = Drive on pin is 3-state. 1h = Reserved 2h = Drive on pin is logic low. 3h = Drive on pin is logic high.
1-0	SRMOD	R/W	0h	Serializer mode bit. 0h = Serializer is inactive. 1h = Serializer is transmitter. 2h = Serializer is receiver. 3h = Reserved

Copyright © 2017, Texas Instruments Incorporated

12.5.28 XBUFn Register (Offset = 200h) [reset = 0h]

XBUFn is shown in Figure 12-31 and described in Table 12-33.

Return to Summary Table.

The transmit buffers for the serializers (XBUF) hold data from the transmit format unit.

CAUTION

Accessing XBUF registers that are not implemented on a specific DSP may cause improper device operation.

Figure 12-31. XBUFn Registers

31	30	29	28	27	26	25	24	23	22	21	20	19	18	17	16	15	14	13	12	11	10	9	8	7	6	5	4	3	2	1	0
XBUFn																															
R/W-0h																															

LEGEND: R/W = Read/Write; R = Read only; W1toCl = Write 1 to clear bit; *-n* = value after reset

Table 12-33. XBUFn Register Field Descriptions

Bit	Field	Type	Reset	Description
31-0	XBUFn	R/W	0h	For transmit operations, the XBUF is an alias of the XRBUF in the serializer. The XBUF can be accessed through the peripheral configuration port (see) or through the DMA port (see).

Copyright © 2017, Texas Instruments Incorporated

12.5.29 RBUFn Register (Offset = 280h) [reset = 0h]

RBUFn is shown in Figure 12-32 and described in Table 12-34.

Return to Summary Table.

The receive buffers for the serializers (RBUF) hold data from the serializer before the data goes to the receive format unit.

CAUTION

Accessing RBUF registers that are not implemented on a specific DSP may cause improper device operation.

Figure 12-32. RBUFn Registers

31	30	29	28	27	26	25	24	23	22	21	20	19	18	17	16	15	14	13	12	11	10	9	8	7	6	5	4	3	2	1	0
RBUFn																															
R/W-0h																															

LEGEND: R/W = Read/Write; R = Read only; W1toCl = Write 1 to clear bit; -*n* = value after reset

Table 12-34. RBUFn Register Field Descriptions

Bit	Field	Type	Reset	Description
31-0	RBUFn	R/W	0h	For receive operations, the RBUF is an alias of the XRBUF in the serializer. The RBUF can be accessed through the peripheral configuration port (see) or through the DMA port (see).

Copyright © 2017, Texas Instruments Incorporated

Analog-to-Digital Converter [ADC]

Topic **Page**

13.1 Overview 432
13.2 Key Features 432
13.3 ADC Register Mapping 433
13.4 ADC_MODULE Registers 434
13.5 Initialization and Configuration 456
13.6 Peripheral Library APIs for ADC Operation 456

Copyright © 2017, Texas Instruments Incorporated

13.1 Overview

The CC32xx provides a general purpose, multi-channel Analog-to-Digital Converter (ADC). Each of the ADC channels supports 12-bit conversion resolution with sampling periodicity of 16 uS (62.5 Ksps/channel). Each channel has an associated FIFO and DMA. For detailed electrical characteristics of the ADC, refer to the CC3200 data sheet (SWAS032).

13.2 Key Features

- Total of 8 channels
  - 4 external analog input channels for user applications
  - 4 internal channels reserved for SimpleLink subsystem (network and Wi-Fi).
- 12-bit resolution
- Fixed sampling rate of 16 μs per channel. Equivalent to 62.5K samples/sec per channel
- Fixed round-robin sampling across all channels
- Samples are uniformly spaced and interleaved. Multiple user channels can be combined together to realize higher sampling rate. For example, all four channels can be shorted together to get an aggregate sampling rate of 250K samples/sec.
- DMA interface to transfer data to the application RAM; dedicated DMA channel for each channel
- Capability to timestamp ADC samples using 17-bit timer running on a 40-MHz clock. The user can read the timestamp along with the sample from the FIFO registers. Each sample in the FIFO contains actual data and a timestamp.

Figure 13-1 shows the architecture of the ADC module in the CC32xx.

Figure 13-1. Architecture of the ADC Module in CC32xx

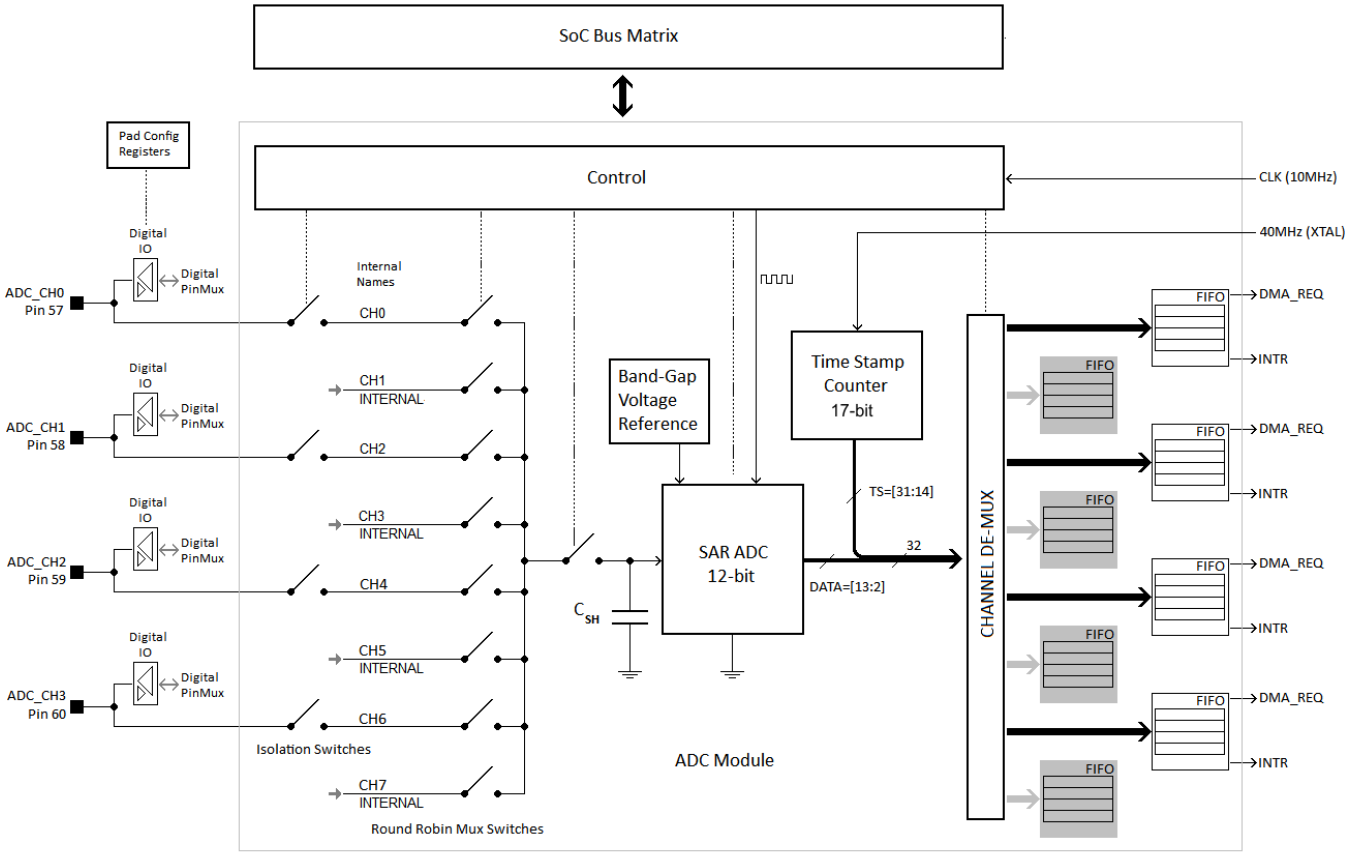

Copyright © 2017, Texas Instruments Incorporated

Figure 13-2 shows the round-robin operation of the ADC.

Figure 13-2. Operation of the ADC

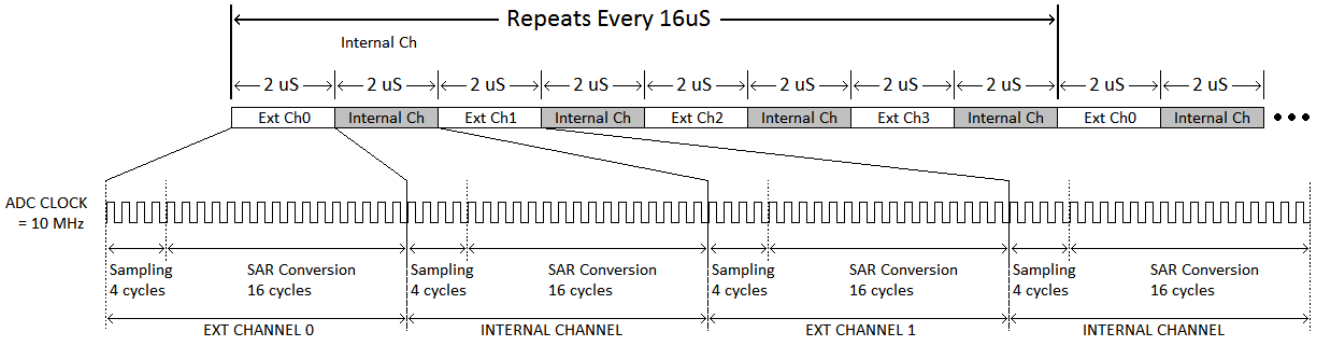

13.3 ADC Register Mapping

Naming convention for ADC registers: The CC32xx ADC module supports a total of 8 analog input channels: CH0 to CH7. Each of these channels are sampled at a fixed rate of 16 uS in a fixed round-robin fashion. See Figure 13-2.

Out of these, the four channels (even) are available for application processor: CH0, CH2, CH4, CH6.

In the chip pin-mux description, these are referred to as ADC_CH0 to ADC_CH3. Table 13-1 shows the name aliasing and the convention followed in register description in the following section of this chapter.

Table 13-1. ADC Registers

Pin Number	ADC Channel Name Alias in Pin Mux	Channel Name Used In ADC Module Register Description
57	ADC_CH0	CH0
58	ADC_CH1	CH2
59	ADC_CH2	CH4
60	ADC_CH3	CH6
N/A	N/A (Used internal to SoC)	CH1
N/A	N/A (Used internal to SoC)	CH3
N/A	N/A (Used internal to SoC)	CH5
N/A	N/A (Used internal to SoC)	CH7

The remaining channels (odd) are used for monitoring various internal levels by the SimpleLink subsystem in CC32xx SoC. Register bits and functions related to these internal channels are marked as reserved in the register description. These bits must not be modified by application code to ensure proper functioning of the system.

Copyright © 2017, Texas Instruments Incorporated

13.4 ADC_MODULE Registers

Table 13-2 lists the memory-mapped registers for the ADC_MODULE. All register offset addresses not listed in Table 13-2 should be considered as reserved locations and the register contents should not be modified. Base address for ADC_MODULE = 0x4402E800.

Table 13-2. ADC_MODULE Registers

Offset	Acronym	Register Name	Section
0h	ADC_CTRL	ADC control register	Section 13.4.1.1
24h	ADC_CH0_IRQ_EN	Channel 0 interrupt enable register	Section 13.4.1.2
2Ch	ADC_CH2_IRQ_EN	Channel 2 interrupt enable register	Section 13.4.1.3
34h	ADC_CH4_IRQ_EN	Channel 4 interrupt enable register	Section 13.4.1.4
3Ch	ADC_CH6_IRQ_EN	Channel 6 interrupt enable register	Section 13.4.1.5
44h	ADC_CH0_IRQ_STATUS	Channel 0 interrupt status register	Section 13.4.1.6
4Ch	ADC_CH2_IRQ_STATUS	Channel 2 interrupt status register	Section 13.4.1.7
54h	ADC_CH4_IRQ_STATUS	Channel 4 interrupt status register	Section 13.4.1.8
5Ch	ADC_CH6_IRQ_STATUS	Channel 6 interrupt status register	Section 13.4.1.9
64h	ADC_DMA_MODE_EN	DMA mode enable register	Section 13.4.1.10
68h	ADC_TIMER_CONFIGURATION	ADC timer configuration register	Section 13.4.1.11
70h	ADC_TIMER_CURRENT_COUNT	ADC timer current count register	Section 13.4.1.12
74h	CHANNEL0FIFODATA	CH0 FIFO DATA register	Section 13.4.1.13
7Ch	CHANNEL2FIFODATA	CH2 FIFO DATA register	Section 13.4.1.14
84h	CHANNEL4FIFODATA	CH4 FIFO DATA register	Section 13.4.1.15
8Ch	CHANNEL6FIFODATA	CH6 FIFO DATA register	Section 13.4.1.16
94h	ADC_CH0_FIFO_LVL	Channel 0 interrupt status register	Section 13.4.1.17
9Ch	ADC_CH2_FIFO_LVL	Channel 2 interrupt status register	Section 13.4.1.18
A4h	ADC_CH4_FIFO_LVL	Channel 4 interrupt status register	Section 13.4.1.19
ACh	ADC_CH6_FIFO_LVL	Channel 6 interrupt status register	Section 13.4.1.20
B8h	ADC_CH_ENABLE	ADC enable register for application channels	Section 13.4.1.21

13.4.1 ADC Register Description

The remainder of this section lists and describes the ADC registers, in numerical order by address offset.

Copyright © 2017, Texas Instruments Incorporated

13.4.1.1 ADC_CTRL Register (offset = 0h) [reset = 0h]

ADC_CTRL is shown in Figure 13-3 and described in Table 13-3.

Figure 13-3. ADC_CTRL Register

31	30	29	28	27	26	25	24
RESERVED							
R-0h							
23	22	21	20	19	18	17	16
RESERVED							
R-0h							
15	14	13	12	11	10	9	8
RESERVED							
R-0h							
7	6	5	4	3	2	1	0
RESERVED							ADC_EN_APPS
R-0h							R/W-0h

Table 13-3. ADC_CTRL Register Field Descriptions

Bit	Field	Type	Reset	Description
31-1	RESERVED	R	0h	
0	ADC_EN_APPS	R/W	0h	ADC enable for application processor

Copyright © 2017, Texas Instruments Incorporated

13.4.1.2 ADC_CH0_IRQ_EN Register (offset = 24h) [reset = 0h]

ADC_CH0_IRQ_EN is shown in Figure 13-4 and described in Table 13-4.

Figure 13-4. ADC_CH0_IRQ_EN Register

31	30	29	28	27	26	25	24
RESERVED							
R-0h							
23	22	21	20	19	18	17	16
RESERVED							
R-0h							
15	14	13	12	11	10	9	8
RESERVED							
R-0h							
7	6	5	4	3	2	1	0
RESERVED				ADC_CHANNEL0_IRQ_EN			
R-0h				R/W-0h			

Table 13-4. ADC_CH0_IRQ_EN Register Field Descriptions

Bit	Field	Type	Reset	Description
31-4	RESERVED	R	0h	
3-0	ADC_CHANNEL0_IRQ_EN	R/W	0h	Interrupt enable register for ADC channel Bit 3: when 1 -> enable FIFO overflow interrupt Bit 2: when 1 -> enable FIFO underflow interrupt Bit 1: when 1 -> enable FIFO empty interrupt Bit 0: when 1 -> enable FIFO full interrupt

Copyright © 2017, Texas Instruments Incorporated

13.4.1.3 ADC_CH2_IRQ_EN Register (offset = 2Ch) [reset = 0h]

ADC_CH2_IRQ_EN is shown in Figure 13-5 and described in Table 13-5.

Figure 13-5. ADC_CH2_IRQ_EN Register

31	30	29	28	27	26	25	24
RESERVED							
R-0h							
23	22	21	20	19	18	17	16
RESERVED							
R-0h							
15	14	13	12	11	10	9	8
RESERVED							
R-0h							
7	6	5	4	3	2	1	0
RESERVED				ADC_CHANNEL2_IRQ_EN			
R-0h				R/W-0h			

Table 13-5. ADC_CH2_IRQ_EN Register Field Descriptions

Bit	Field	Type	Reset	Description
31-4	RESERVED	R	0h	
3-0	ADC_CHANNEL2_IRQ_EN	R/W	0h	Interrupt enable register for ADC channel Bit 3: when 1 -> enable FIFO overflow interrupt Bit 2: when 1 -> enable FIFO underflow interrupt Bit 1: when 1 -> enable FIFO empty interrupt Bit 0: when 1 -> enable FIFO full interrupt

Copyright © 2017, Texas Instruments Incorporated

13.4.1.4 ADC_CH4_IRQ_EN Register (offset = 34h) [reset = 0h]

ADC_CH4_IRQ_EN is shown in Figure 13-6 and described in Table 13-6.

Figure 13-6. ADC_CH4_IRQ_EN Register

31	30	29	28	27	26	25	24
RESERVED							
R-0h							
23	22	21	20	19	18	17	16
RESERVED							
R-0h							
15	14	13	12	11	10	9	8
RESERVED							
R-0h							
7	6	5	4	3	2	1	0
RESERVED				ADC_CHANNEL4_IRQ_EN			
R-0h				R/W-0h			

Table 13-6. ADC_CH4_IRQ_EN Register Field Descriptions

Bit	Field	Type	Reset	Description
31-4	RESERVED	R	0h	
3-0	ADC_CHANNEL4_IRQ_EN	R/W	0h	Interrupt enable register for ADC channel Bit 3: when 1 -> enable FIFO overflow interrupt Bit 2: when 1 -> enable FIFO underflow interrupt Bit 1: when 1 -> enable FIFO empty interrupt Bit 0: when 1 -> enable FIFO full interrupt

Copyright © 2017, Texas Instruments Incorporated

13.4.1.5 ADC_CH6_IRQ_EN Register (offset = 3Ch) [reset = 0h]

ADC_CH6_IRQ_EN is shown in Figure 13-7 and described in Table 13-7.

Figure 13-7. ADC_CH6_IRQ_EN Register

31	30	29	28	27	26	25	24
RESERVED							
R-0h							
23	22	21	20	19	18	17	16
RESERVED							
R-0h							
15	14	13	12	11	10	9	8
RESERVED							
R-0h							
7	6	5	4	3	2	1	0
RESERVED				ADC_CHANNEL6_IRQ_EN			
R-0h				R/W-0h			

Table 13-7. ADC_CH6_IRQ_EN Register Field Descriptions

Bit	Field	Type	Reset	Description
31-4	RESERVED	R	0h	
3-0	ADC_CHANNEL6_IRQ_EN	R/W	0h	Interrupt enable register for ADC channel Bit 3: when 1 -> enable FIFO overflow interrupt Bit 2: when 1 -> enable FIFO underflow interrupt Bit 1: when 1 -> enable FIFO empty interrupt Bit 0: when 1 -> enable FIFO full interrupt

Copyright © 2017, Texas Instruments Incorporated

13.4.1.6 ADC_CH0_IRQ_STATUS Register (offset = 44h) [reset = 0h]

ADC_CH0_IRQ_STATUS is shown in Figure 13-8 and described in Table 13-8.

Figure 13-8. ADC_CH0_IRQ_STATUS Register

31	30	29	28	27	26	25	24
RESERVED							
R-0h							
23	22	21	20	19	18	17	16
RESERVED							
R-0h							
15	14	13	12	11	10	9	8
RESERVED							
R-0h							
7	6	5	4	3	2	1	0
RESERVED				ADC_CHANNEL0_IRQ_STATUS			
R-0h				R/W-0h			

Table 13-8. ADC_CH0_IRQ_STATUS Register Field Descriptions

Bit	Field	Type	Reset	Description
31-4	RESERVED	R	0h	
3-0	ADC_CHANNEL0_IRQ_STATUS	R/W	0h	Interrupt status register for ADC channel. Interrupt status can be cleared on write. Bit 3: when value 1 is written -> Clears FIFO overflow interrupt status in the next cycle. If same interrupt is set in the same cycle, then the interrupt would be set and the clear command ignored. Bit 2: when value 1 is written -> Clears FIFO underflow interrupt status in the next cycle. Bit 1: when value 1 is written -> Clears FIFO empty interrupt status in the next cycle. Bit 0: when value 1 is written -> Clears FIFO full interrupt status in the next cycle.

Copyright © 2017, Texas Instruments Incorporated

13.4.1.7 ADC_CH2_IRQ_STATUS Register (offset = 4Ch) [reset = 0h]

ADC_CH2_IRQ_STATUS is shown in Figure 13-9 and described in Table 13-9.

Figure 13-9. ADC_CH2_IRQ_STATUS Register

31	30	29	28	27	26	25	24
RESERVED							
R-0h							
23	22	21	20	19	18	17	16
RESERVED							
R-0h							
15	14	13	12	11	10	9	8
RESERVED							
R-0h							
7	6	5	4	3	2	1	0
RESERVED				ADC_CHANNEL2_IRQ_STATUS			
R-0h				R/W-0h			

Table 13-9. ADC_CH2_IRQ_STATUS Register Field Descriptions

Bit	Field	Type	Reset	Description
31-4	RESERVED	R	0h	
3-0	ADC_CHANNEL2_IRQ_STATUS	R/W	0h	Interrupt status register for ADC channel. Interrupt status can be cleared on write. Bit 3: when value 1 is written -> Clears FIFO overflow interrupt status in the next cycle. If the same interrupt is set in the same cycle, then the interrupt would be set and the clear command ignored. Bit 2: when value 1 is written -> Clears FIFO underflow interrupt status in the next cycle. Bit 1: when value 1 is written -> Clears FIFO empty interrupt status in the next cycle. Bit 0: when value 1 is written -> Clears FIFO full interrupt status in the next cycle.

Copyright © 2017, Texas Instruments Incorporated

13.4.1.8 ADC_CH4_IRQ_STATUS Register (offset = 54h) [reset = 0h]

ADC_CH4_IRQ_STATUS is shown in Figure 13-10 and described in Table 13-10.

Figure 13-10. ADC_CH4_IRQ_STATUS Register

31	30	29	28	27	26	25	24
RESERVED							
R-0h							
23	22	21	20	19	18	17	16
RESERVED							
R-0h							
15	14	13	12	11	10	9	8
RESERVED							
R-0h							
7	6	5	4	3	2	1	0
RESERVED				ADC_CHANNEL4_IRQ_STATUS			
R-0h				R/W-0h			

Table 13-10. ADC_CH4_IRQ_STATUS Register Field Descriptions

Bit	Field	Type	Reset	Description
31-4	RESERVED	R	0h	
3-0	ADC_CHANNEL4_IRQ_STATUS	R/W	0h	Interrupt status register for ADC channel. Interrupt status can be cleared on write. Bit 3: when value 1 is written -> Clears FIFO overflow interrupt status in the next cycle. If the same interrupt is set in the same cycle, then the interrupt would be set and the clear command ignored. Bit 2: when value 1 is written -> Clears FIFO underflow interrupt status in the next cycle. Bit 1: when value 1 is written -> Clears FIFO empty interrupt status in the next cycle. Bit 0: when value 1 is written -> Clears FIFO full interrupt status in the next cycle.

Copyright © 2017, Texas Instruments Incorporated

13.4.1.9 ADC_CH6_IRQ_STATUS Register (offset = 5Ch) [reset = 0h]

ADC_CH6_IRQ_STATUS is shown in Figure 13-11 and described in Table 13-11.

Figure 13-11. ADC_CH6_IRQ_STATUS Register

31	30	29	28	27	26	25	24
RESERVED							
R-0h							
23	22	21	20	19	18	17	16
RESERVED							
R-0h							
15	14	13	12	11	10	9	8
RESERVED							
R-0h							
7	6	5	4	3	2	1	0
RESERVED				ADC_CHANNEL6_IRQ_STATUS			
R-0h				R/W-0h			

Table 13-11. ADC_CH6_IRQ_STATUS Register Field Descriptions

Bit	Field	Type	Reset	Description
31-4	RESERVED	R	0h	
3-0	ADC_CHANNEL6_IRQ_STATUS	R/W	0h	Interrupt status register for ADC channel. Interrupt status can be cleared on write. Bit 3: when value 1 is written -> Clears FIFO overflow interrupt status in the next cycle. If the same interrupt is set in the same cycle, then the interrupt would be set and the clear command ignored. Bit 2: when value 1 is written -> Clears FIFO underflow interrupt status in the next cycle. Bit 1: when value 1 is written -> Clears FIFO empty interrupt status in the next cycle. Bit 0: when value 1 is written -> Clears FIFO full interrupt status in the next cycle.

Copyright © 2017, Texas Instruments Incorporated

13.4.1.10 ADC_DMA_MODE_EN Register (offset = 64h) [reset = 0h]

ADC_DMA_MODE_EN is shown in Figure 13-12 and described in Table 13-12.

Figure 13-12. ADC_DMA_MODE_EN Register

31	30	29	28	27	26	25	24	23	22	21	20	19	18	17	16
RESERVED															
R-0h															
15	14	13	12	11	10	9	8	7	6	5	4	3	2	1	0
RESERVED								DMA_MODEENABLE							
R-0h								R/W-0h							

Table 13-12. ADC_DMA_MODE_EN Register Field Descriptions

Bit	Field	Type	Reset	Description
31-8	RESERVED	R	0h	
7-0	DMA_MODEENABLE	R/W	0h	This register enables DMA mode. Bit 0: channel 0 DMA mode enable. Bit 1: Reserved for internal channel Bit 2: channel 2 DMA mode enable. Bit 3: Reserved for internal channel. Bit 4: channel 4 DMA mode enable. Bit 5: Reserved for internal channel Bit 6: channel 6 DMA mode enable. Bit 7: Reserved for internal channel. 0h = Only the interrupt mode is enabled. 1h = Respective ADC channel is enabled for DMA.

Copyright © 2017, Texas Instruments Incorporated

13.4.1.11 ADC_TIMER_CONFIGURATION Register (offset = 68h) [reset = 111111h]

ADC_TIMER_CONFIGURATION is shown in Figure 13-13 and described in Table 13-13.

Figure 13-13. ADC_TIMER_CONFIGURATION Register

31	30	29	28	27	26	25	24
RESERVED						TIMEREN	TIMERRESET
R-0h						R/W-0h	R/W-0h
23	22	21	20	19	18	17	16
TIMERCOUNT							
R/W-111111h							
15	14	13	12	11	10	9	8
TIMERCOUNT							
R/W-111111h							
7	6	5	4	3	2	1	0
TIMERCOUNT							
R/W-111111h							

Table 13-13. ADC_TIMER_CONFIGURATION Register Field Descriptions

Bit	Field	Type	Reset	Description
31-26	RESERVED	R	0h	
25	TIMEREN	R/W	0h	1h = Timer is enabled
24	TIMERRESET	R/W	0h	1h = Reset timer
23-0	TIMERCOUNT	R/W	111111h	Timer count configuration. 17-bit counter is supported. Other MSBs are redundant.

Copyright © 2017, Texas Instruments Incorporated

13.4.1.12 ADC_TIMER_CURRENT_COUNT Register (offset = 70h) [reset = 0h]

ADC_TIMER_CURRENT_COUNT is shown in Figure 13-14 and described in Table 13-14.

Figure 13-14. ADC_TIMER_CURRENT_COUNT Register

31	30	29	28	27	26	25	24	23	22	21	20	19	18	17	16	15	14	13	12	11	10	9	8	7	6	5	4	3	2	1	0
RESERVED															TIMERCURRENTCOUNT																	
R-0h															R-0h																

Table 13-14. ADC_TIMER_CURRENT_COUNT Register Field Descriptions

Bit	Field	Type	Reset	Description
31-17	RESERVED	R	0h	
16-0	TIMERCURRENTCOUNT	R	0h	Timer count configuration

Copyright © 2017, Texas Instruments Incorporated

13.4.1.13 CHANNEL0FIFODATA Register (offset = 74h) [reset = 0h]

CHANNEL0FIFODATA is shown in Figure 13-15 and described in Table 13-15.

Figure 13-15. CHANNEL0FIFODATA Register

31	30	29	28	27	26	25	24	23	22	21	20	19	18	17	16	15	14	13	12	11	10	9	8	7	6	5	4	3	2	1	0
FIFO_RD_DATA																															
R-0h																															

Table 13-15. CHANNEL0FIFODATA Register Field Descriptions

Bit	Field	Type	Reset	Description
31-0	FIFO_RD_DATA	R	0h	Read to this register returns ADC data, along with timestamp information in following format: [1:0] : Reserved [13:2] : ADC sample Bits [30:14]: Timestamp per ADC sample [31] : Reserved

Copyright © 2017, Texas Instruments Incorporated

13.4.1.14 CHANNEL2FIFODATA Register (offset = 7Ch) [reset = 0h]

CHANNEL2FIFODATA is shown in Figure 13-16 and described in Table 13-16.

Figure 13-16. CHANNEL2FIFODATA Register

31	30	29	28	27	26	25	24	23	22	21	20	19	18	17	16	15	14	13	12	11	10	9	8	7	6	5	4	3	2	1	0
FIFO_RD_DATA																															
R-0h																															

Table 13-16. CHANNEL2FIFODATA Register Field Descriptions

Bit	Field	Type	Reset	Description
31-0	FIFO_RD_DATA	R	0h	Read to this register returns ADC data, along with timestamp information in following format: [1:0] : Reserved [13:2] : ADC sample Bits [30:14]: Timestamp per ADC sample [31] : Reserved

Copyright © 2017, Texas Instruments Incorporated

13.4.1.15 CHANNEL4FIFODATA Register (offset = 84h) [reset = 0h]

CHANNEL4FIFODATA is shown in Figure 13-17 and described in Table 13-17.

Figure 13-17. CHANNEL4FIFODATA Register

31	30	29	28	27	26	25	24	23	22	21	20	19	18	17	16	15	14	13	12	11	10	9	8	7	6	5	4	3	2	1	0
FIFO_RD_DATA																															
R-0h																															

Table 13-17. CHANNEL4FIFODATA Register Field Descriptions

Bit	Field	Type	Reset	Description
31-0	FIFO_RD_DATA	R	0h	Read to this register returns ADC data, along with timestamp information in following format: [1:0] : Reserved [13:2] : ADC sample Bits [30:14]: Timestamp per ADC sample [31] : Reserved

Copyright © 2017, Texas Instruments Incorporated

13.4.1.16 CHANNEL6FIFODATA Register (offset = 8Ch) [reset = 0h]

CHANNEL6FIFODATA is shown in Figure 13-18 and described in Table 13-18.

Figure 13-18. CHANNEL6FIFODATA Register

31	30	29	28	27	26	25	24	23	22	21	20	19	18	17	16	15	14	13	12	11	10	9	8	7	6	5	4	3	2	1	0
FIFO_RD_DATA																															
R-0h																															

Table 13-18. CHANNEL6FIFODATA Register Field Descriptions

Bit	Field	Type	Reset	Description
31-0	FIFO_RD_DATA	R	0h	Read to this register returns ADC data, along with time stamp information in following format: [1:0] : Reserved [13:2] : ADC sample Bits [30:14]: Timestamp per ADC sample [31] : Reserved

Copyright © 2017, Texas Instruments Incorporated

13.4.1.17 ADC_CH0_FIFO_LVL Register (offset = 94h) [reset = 0h]

ADC_CH0_FIFO_LVL is shown in Figure 13-19 and described in Table 13-19.

Figure 13-19. ADC_CH0_FIFO_LVL Register

31	30	29	28	27	26	25	24
RESERVED							
R-0h							
23	22	21	20	19	18	17	16
RESERVED							
R-0h							
15	14	13	12	11	10	9	8
RESERVED							
R-0h							
7	6	5	4	3	2	1	0
RESERVED					ADC_CHANNEL0_FIFO_LVL		
R-0h					R-0h		

Table 13-19. ADC_CH0_FIFO_LVL Register Field Descriptions

Bit	Field	Type	Reset	Description
31-3	RESERVED	R	0h	
2-0	ADC_CHANNEL0_FIFO_LVL	R	0h	This register shows the current FIFO level. FIFO is 4 words wide. Possible supported levels are : 0x0 to 0x4.

Copyright © 2017, Texas Instruments Incorporated

13.4.1.18 ADC_CH2_FIFO_LVL Register (offset = 9Ch) [reset = 0h]

ADC_CH2_FIFO_LVL is shown in Figure 13-20 and described in Table 13-20.

Figure 13-20. ADC_CH2_FIFO_LVL Register

31	30	29	28	27	26	25	24
RESERVED							
R-0h							
23	22	21	20	19	18	17	16
RESERVED							
R-0h							
15	14	13	12	11	10	9	8
RESERVED							
R-0h							
7	6	5	4	3	2	1	0
RESERVED					ADC_CHANNEL2_FIFO_LVL		
R-0h					R-0h		

Table 13-20. ADC_CH2_FIFO_LVL Register Field Descriptions

Bit	Field	Type	Reset	Description
31-3	RESERVED	R	0h	
2-0	ADC_CHANNEL2_FIFO_LVL	R	0h	This register shows the current FIFO level. FIFO is 4 words wide. Possible supported levels are : 0x0 to 0x4.

Copyright © 2017, Texas Instruments Incorporated

13.4.1.19 ADC_CH4_FIFO_LVL Register (offset = A4h) [reset = 0h]

ADC_CH4_FIFO_LVL is shown in Figure 13-21 and described in Table 13-21.

Figure 13-21. ADC_CH4_FIFO_LVL Register

31	30	29	28	27	26	25	24
RESERVED							
R-0h							
23	22	21	20	19	18	17	16
RESERVED							
R-0h							
15	14	13	12	11	10	9	8
RESERVED							
R-0h							
7	6	5	4	3	2	1	0
RESERVED					ADC_CHANNEL4_FIFO_LVL		
R-0h					R-0h		

Table 13-21. ADC_CH4_FIFO_LVL Register Field Descriptions

Bit	Field	Type	Reset	Description
31-3	RESERVED	R	0h	
2-0	ADC_CHANNEL4_FIFO_LVL	R	0h	This register shows the current FIFO level. FIFO is 4 words wide. Possible supported levels are : 0x0 to 0x4.

Copyright © 2017, Texas Instruments Incorporated

13.4.1.20 ADC_CH6_FIFO_LVL Register (offset = ACh) [reset = 0h]

ADC_CH6_FIFO_LVL is shown in Figure 13-22 and described in Table 13-22.

Figure 13-22. ADC_CH6_FIFO_LVL Register

31	30	29	28	27	26	25	24
RESERVED							
R-0h							
23	22	21	20	19	18	17	16
RESERVED							
R-0h							
15	14	13	12	11	10	9	8
RESERVED							
R-0h							
7	6	5	4	3	2	1	0
RESERVED					ADC_CHANNEL6_FIFO_LVL		
R-0h					R-0h		

Table 13-22. ADC_CH6_FIFO_LVL Register Field Descriptions

Bit	Field	Type	Reset	Description
31-3	RESERVED	R	0h	
2-0	ADC_CHANNEL6_FIFO_LVL	R	0h	This register shows the current FIFO level. FIFO is 4 words wide. Possible supported levels are : 0x0 to 0x4.

Copyright © 2017, Texas Instruments Incorporated

13.4.1.21 ADC_CH_ENABLE Register (offset = B8h) [reset = 0h]

ADC_CH_ENABLE is shown in Figure 13-23 and described in Table 13-23.

Figure 13-23. ADC_CH_ENABLE Register

31	30	29	28	27	26	25	24
RESERVED							
R-0h							
23	22	21	20	19	18	17	16
RESERVED							
R-0h							
15	14	13	12	11	10	9	8
RESERVED							
R-0h							
7	6	5	4	3	2	1	0
RESERVED			EXTERNAL_CH_GATE				RESERVED
R-0h			R/W-0h				R-0h

Table 13-23. ADC_CH_ENABLE Register Field Descriptions

Bit	Field	Type	Reset	Description
31-5	RESERVED	R	0h	
4-1	EXTERNAL_CH_GATE	R/W	0h	Bits[4:1] : to control ADC channel isolation switches. By default all channel analog inputs are isolated (value: 0). Bit1: 1 connects Channel '0' to Pin-57 (ADC_CH0) Bit2: 1 connects Channel '2' to Pin-58 (ADC_CH1) Bit3: 1 connects Channel '4' to Pin-59 (ADC_CH2) Bit4: 1 connects Channel '6' to Pin-60 (ADC_CH3)
0	RESERVED	R	0h	

Copyright © 2017, Texas Instruments Incorporated

13.5 Initialization and Configuration

This section provides a pseudo-code for the host initialization and configuration example, of the analog-to-digital converter channels.

1. Set the pin type as ADC for required pin
   PinTypeADC(PIN_58, 0xFF)
2. Enable the ADC channel ADCChannel
   Enable(ADC_BASE, ADC_CH_1)
3. Optionally configure internal timer for time stamping
   ADCTimerConfig(ADC_BASE, 2^17)
   ADCTimerEnable(ADC_BASE)
4. Enable the ADC module
   ADCEnable(ADC_BASE)
5. Read out the ADC samples using following code
   if(ADCFIFOLvlGet(ADC_BASE, ADC_CH_1))
   {
   ulSample = ADCFIFORead(ADC_BASE, ADC_CH_1)
   }

13.6 Peripheral Library APIs for ADC Operation

13.6.1 Overview

Four out of the eight channels of the ADC in the CC32xx are used internally for the SimpleLink subsystem (NWP and Wi-Fi). TI encourages applications to access the four external ADC channels through the peripheral library APIs. These APIs have been designed for optimal ADC operation of the four ADC channels available to the user, along with the internal ADC channels used for internal functionality of the device. In this section, the emphasis is on understanding the ADC APIs provided in the CC32xx Software Development Kit (Peripheral Library). This section lists the software APIs hosted in CC32xx SDK (Peripheral Library) that can be used by the user for easy access to ADC operation.

13.6.2 Configuring the ADC Channels

Configuration options for the application developer include:

- Enable the channel of interest (assuming the user has programmed the appropriate pins as mentioned in the device data sheet). Most importantly, the device pin is configured as an analog pin.
- Data transfer – CPU (FIFO Level Check and FIFO Read) or DMA
- Set up interrupts
- Set up timer for time-stamping samples

The following tables serve as a reference for values used for ulChannel and ulIntFlags:

Table 13-24. ulChannel Tags

Tag	Value
ADC_CH_0	0x00000000
ADC_CH_1	0x00000008
ADC_CH_2	0x00000010
ADC_CH_3	0x00000018

Copyright © 2017, Texas Instruments Incorporated

Table 13-25. ulIntFlags Tags

Tag	Value
ADC_DMA_DONE	0x00000010
ADC_FIFO_OVERFLOW	0x00000008
ADC_FIFO_UNDERFLOW	0x00000004
ADC_FIFO_EMPTY	0x00000002
ADC_FIFO_FULL	0x00000001

13.6.3 Basic APIs for Enabling and Configuring the Interface

13.6.3.1 void ADCEnable (unsigned long ulBase)

Enables the ADC.

Parameters:

ulBase	Base address of the ADC

This function sets the ADC global enable.

Returns:

- None

13.6.3.2 void ADCDisable (unsigned long ulBase)

Disables the ADC.

Parameters:

ulBase	Base address of the ADC

This function clears the ADC global enable.

Returns:

- None

13.6.3.3 void ADCChannelEnable (unsigned long ulBase, unsigned long ulChannel)

Enables a specified ADC channel.

Parameters:

ulBase	Base address of the ADC
ulChannel	One of the valid ADC channels

This function enables specified ADC channel and configures the pin as an analog pin.

Returns:

- None

13.6.3.4 void ADCChannelDisable (unsigned long ulBase, unsigned long ulChannel)

Disables a specified ADC channel.

Parameters:

Copyright © 2017, Texas Instruments Incorporated

ulBase	Base address of the ADC
ulChannel	One of the valid ADC channels

This function disables a specified ADC channel.

Returns:

- None

13.6.4 APIs for Data Transfer [Direct Access to FIFO and DMA Setup]

13.6.4.1 unsigned char ADCFIFOLvlGet (unsigned long ulBase, unsigned long ulChannel)

Gets the current FIFO level for a specified ADC channel.

Parameters:

ulBase	Base address of the ADC
ulChannel	One of the valid ADC channels

This function returns the current FIFO level for specified ADC channel.

The ulChannel parameter should be one of:

- ADC_CH_0 for channel 0
- ADC_CH_1 for channel 1
- ADC_CH_2 for channel 2
- ADC_CH_3 for channel 3

Returns:

- Returns the current FIFO level for a specified channel.

13.6.4.2 unsigned long ADCFIFORead (unsigned long ulBase, unsigned long ulChannel)

Reads FIFO for a specified ADC channel.

Parameters:

ulBase	Base address of the ADC
ulChannel	One of the valid ADC channels

This function returns one data sample from the channel FIFO as specified by the ulChannel parameter.

The ulChannel parameter should be one of:

- ADC_CH_0 for channel 0
- ADC_CH_1 for channel 1
- ADC_CH_2 for channel 2
- ADC_CH_3 for channel 3

Returns:

- Returns one data sample from the channel FIFO.

13.6.4.3 void ADCDMAEnable (unsigned long ulBase, unsigned long ulChannel)

Enables the ADC DMA operation for a specified channel.

Parameters:

Copyright © 2017, Texas Instruments Incorporated

ulBase	Base address of the ADC
ulChannel	One of the valid ADC channels

This function enables the DMA operation for a specified ADC channel.

The ulChannel parameter should be one of:

- ADC_CH_0 for channel 0
- ADC_CH_1 for channel 1
- ADC_CH_2 for channel 2
- ADC_CH_3 for channel 3

Returns:

- None.

13.6.4.4 void ADCDMADisable (unsigned long ulBase, unsigned long ulChannel)

Disables the ADC DMA operation for a specified channel.

Parameters:

ulBase	Base address of the ADC
ulChannel	One of the valid ADC channels

This function disables the DMA operation for a specified ADC channel.

The ulChannel parameter should be one of:

- ADC_CH_0 for channel 0
- ADC_CH_1 for channel 1
- ADC_CH_2 for channel 2
- ADC_CH_3 for channel 3

Returns:

- None.

13.6.5 APIs for Interrupt Usage

13.6.5.1 void ADCIntEnable (unsigned long ulBase, unsigned long ulChannel, unsigned long ulIntFlags)

Enables individual interrupt sources for a specified channel.

Parameters:

ulBase	Base address of the ADC
ulChannel	One of the valid ADC channels
ulIntFlags	The bit mask of the interrupt sources to be enabled

This function enables the indicated ADC interrupt sources. Only enabled sources can be reflected to the processor interrupt; disabled sources have no effect on the processor.

The ulChannel parameter should be one of:

- ADC_CH_0 for channel 0
- ADC_CH_1 for channel 1
- ADC_CH_2 for channel 2
- ADC_CH_3 for channel 3

The ulIntFlags parameter is the logical OR of any of:

Copyright © 2017, Texas Instruments Incorporated

- ADC_DMA_DONE for DMA done
- ADC_FIFO_OVERFLOW for FIFO over flow
- ADC_FIFO_UNDERFLOW for FIFO under flow
- ADC_FIFO_EMPTY for FIFO empty
- ADC_FIFO_FULL for FIFO full

Returns:

- None

13.6.5.2 void ADCIntDisable (unsigned long ulBase, unsigned long ulChannel, unsigned long ulIntFlags)

Disables individual interrupt sources for a specified channel.

Parameters:

ulBase	Base address of the ADC
ulChannel	One of the valid ADC channels
ulIntFlags	The bit mask of the interrupt sources to be enabled

This function disables the indicated ADC interrupt sources. Only enabled sources can be reflected to the processor interrupt; disabled sources have no effect on the processor.

The ulIntFlags and ulChannel parameters should be as explained in ADCIntEnable().

Returns:

- None

13.6.5.3 void ADCIntRegister (unsigned long ulBase, unsigned long ulChannel, void(*)(void) pfnHandler)

Enables and registers ADC interrupt handler for a specified channel.

Parameters:

ulBase	Base address of the ADC
ulChannel	One of the valid ADC channels
pfnHandler	A pointer to the function to be called when the ADC channel interrupt occurs

This function enables and registers ADC interrupt handler for a specified channel. An individual interrupt for each channel should be enabled using ADCIntEnable(). It is the responsibility of the interrupt handler to clear the interrupt source.

The ulChannel parameter should be one of:

- ADC_CH_0 for channel 0
- ADC_CH_1 for channel 1
- ADC_CH_2 for channel 2
- ADC_CH_3 for channel 3

Returns:

- None

13.6.5.4 void ADCIntUnregister (unsigned long ulBase, unsigned long ulChannel)

Disables and unregisters ADC interrupt handler for a specified channel.

Parameters:

Copyright © 2017, Texas Instruments Incorporated

ulBase	Base address of the ADC
ulChannel	One of the valid ADC channels

This function disables and unregisters ADC interrupt handler for a specified channel. This function also masks off the interrupt in the interrupt controller, so that the interrupt handler is no longer called.

The ulChannel parameter should be one of:

- ADC_CH_0 for channel 0
- ADC_CH_1 for channel 1
- ADC_CH_2 for channel 2
- ADC_CH_3 for channel 3

Returns:

- None

13.6.5.5 unsigned long ADCIntStatus (unsigned long ulBase, unsigned long ulChannel)

Gets the current channel interrupt status.

Parameters:

ulBase	Base address of the ADC
ulChannel	One of the valid ADC channels

This function returns the interrupt status of the specified ADC channel. See Table 13-25

The parameter ulChannel should be as explained in ADCIntEnable().

Returns:

- Return the ADC channel interrupt status, enumerated as a bit field of values described in ADCIntEnable()

13.6.5.6 void ADCIntClear (unsigned long ulBase, unsigned long ulChannel, unsigned long ulIntFlags)

Clears the current channel interrupt sources.

Parameters:

ulBase	Base address of the ADC
ulChannel	One of the valid ADC channels
ulIntFlags	Bit mask of the interrupt sources to be cleared

This function clears an individual interrupt source for the specified ADC channel.

The ulChannel parameter should be as explained in ADCIntEnable().

Returns:

- None

13.6.6 APIs for Setting Up ADC Timer for Time Stamping the Samples

13.6.6.1 void ADCTimerConfig (unsigned long ulBase, unsigned long ulValue)

Configures the ADC internal timer.

Parameters:

Copyright © 2017, Texas Instruments Incorporated

ulBase	Base address of the ADC
ulValue	Wrap-around value of the timer

This function configures the ADC internal timer. The ADC timer is 17-bit timer that internally time-stamps the ADC data samples. The user can read the timestamp, along with the sample, from the FIFO registers. Each sample in the FIFO contains 14-bit actual data and an 18-bit timestamp.

The ulValue parameter can take any value between 0 and 2^17.

Returns:

- None

13.6.6.2 void ADCTimerDisable (unsigned long ulBase)

Disables the ADC internal timer.

Parameters:

ulBase	Base address of the ADC

This function disables the 17-bit ADC internal timer.

Returns:

- None

13.6.6.3 void ADCTimerEnable (unsigned long ulBase)

Enables the ADC internal timer.

Parameters:

ulBase	Base address of the ADC

This function enables the 17-bit ADC internal timer.

Returns:

- None

13.6.6.4 void ADCTimerReset (unsigned long ulBase)

Resets the ADC internal timer.

Parameters:

ulBase	Base address of the ADC

This function resets the 17-bit ADC internal timer.

Returns:

- None

13.6.6.5 unsigned long ADCTimerValueGet (unsigned long ulBase)

Gets the current value of ADC internal timer.

Parameters:

ulBase	Base address of the ADC

Copyright © 2017, Texas Instruments Incorporated

This function gets the current value of the 17-bit ADC internal timer.

Returns:

- Returns the current value of the ADC internal timer.

Copyright © 2017, Texas Instruments Incorporated

Parallel Camera Interface Module

Topic Page

14.1 Overview 465
14.2 Image Sensor Interface 465
14.3 Functional Description 466
14.4 Programming Model 471
14.5 Interrupt Handling 472
14.6 Camera Registers 473
14.7 Peripheral Library APIs 485
14.8 Developer's Guide 488

Copyright © 2017, Texas Instruments Incorporated

14.1 Overview

The CC32xx camera core module can interface an external image sensor. It supports an 8-bit parallel image sensor interface (Non-BT) interface with vertical and horizontal synchronization signals. BT mode is not supported. The recommended maximum pixel clock is 1 MHz. The module stores the image data in a FIFO and can generate DMA requests.

Figure 14-1 shows how the camera core is connected to the rest of the system in the CC32xx.

Figure 14-1. The Camera Module Interfaces

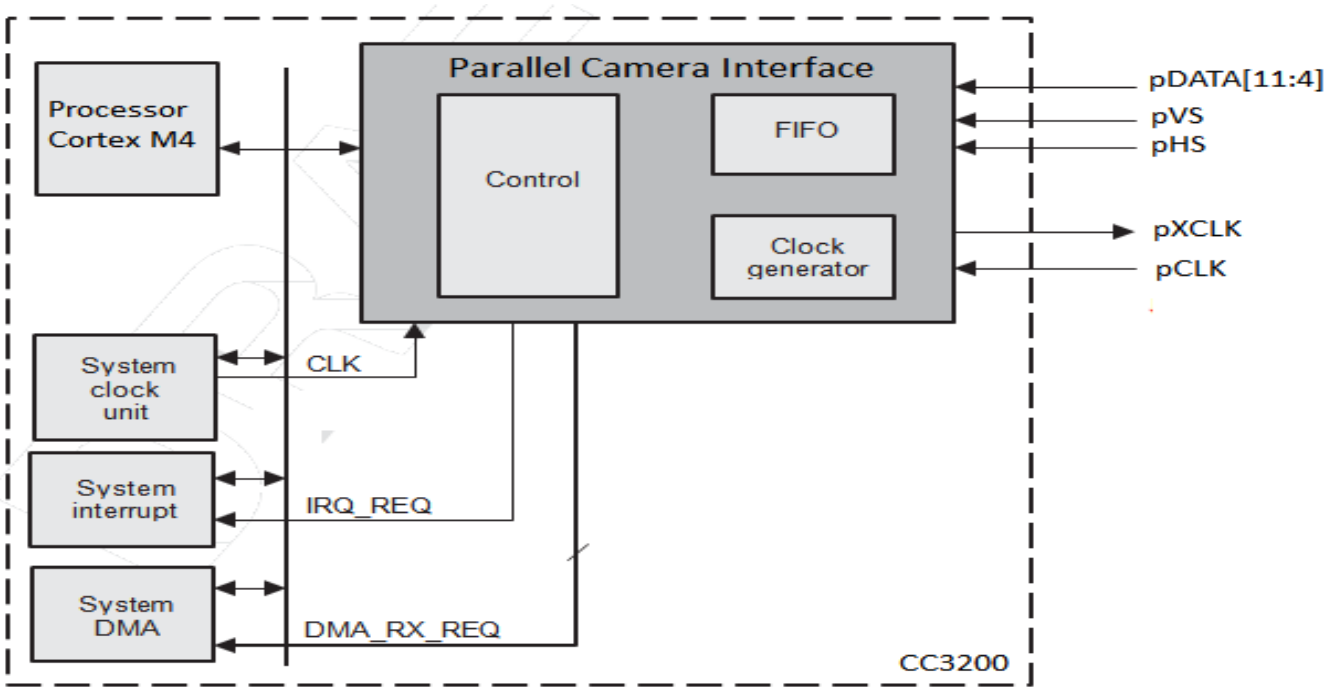

14.2 Image Sensor Interface

Table 14-1 lists the image sensor interface signals.

Copyright © 2017, Texas Instruments Incorporated

Table 14-1. Image Sensor Interface Signals

Interface Name	I/O	Description
CAM_P_HS	I	Row trigger input signal. The polarity of CAM_P_HS can be reversed.
CAM_P_VS	I	Frame trigger input signal. The polarity of CAM_P_VS can be reversed.
CAM_MCLK	I	Input clock used to derive the external clock for the image sensor clock (see Section 14.3.4).
CAM_XCLK	O	External clock for the image sensor module. This clock is derived from the functional clock (see Section 14.3.4).
CAM_P_DATA [11:4]	I	Parallel input data bits. Upper 8 bits of the interface are connected to 8 bits from image sensor.
CAM_P_CLK	I	Latch clock for the parallel input data. The data on the parallel interface are presented on CAM_P_DATA, one pixel for every CAM_P_CLK rising or falling edge.

14.3 Functional Description

The camera core transfers data from the image sensor into the buffer (FIFO) to generate DMA requests (one working on the threshold, the other on the remaining data in the FIFO to complete the frame acquisition).

The camera interface can provide a clock to the external image sensor module (CAM_XCLK). This clock is derived from the functional clock CAM_MCLK.

14.3.1 Modes of Operation

The camera interface uses the CAM_P_HS and CAM_P_VS signal to detect when the data is valid. This configuration can work with 8-bit data. No assumptions are made on the data format.

The pixel data is presented on CAM_P_DATA one pixel for every CAM_P_CLK rising edge (or falling, depending on the configuration of CAM_P_CLK polarity, defined in CC_CTRL.PAR_CLK_POL).

There are additional pixel times between rows that represent a blanking period. The active pixels are identified by a combination of two additional timing signals: horizontal synchronization (CAM_P_HS) and vertical synchronization (CAM_P_VS). During the image sensor readout, these signals define when a row of valid data begins and ends, and when a frame starts and ends. A bit field sets the CAM_P_HS polarity (NOBT_HS_POL) and CAM_P_VS polarity (NOBT_VS_POL).

Figure 14-2. Synchronization Signals and Frame Timing

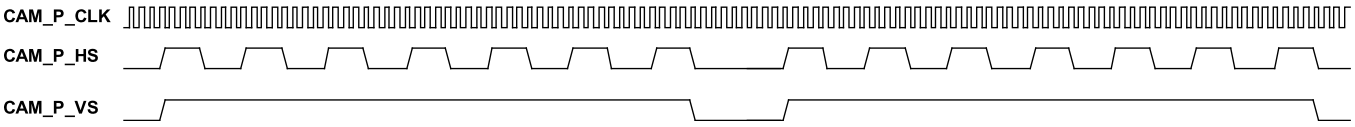

Note that the clock CAM_P_CLK is running during blanking periods (CAM_P_HS and CAM_P_VS inactive) and a minimum of 10 clock cycles are required between two consecutive CAM_P_VS active for proper operations when the line is not a multiple of 12 bytes, otherwise 1 clock cycle is enough to detect CAM_P_VS and work properly.

Figure 14-3. Synchronization Signals and Data Timing

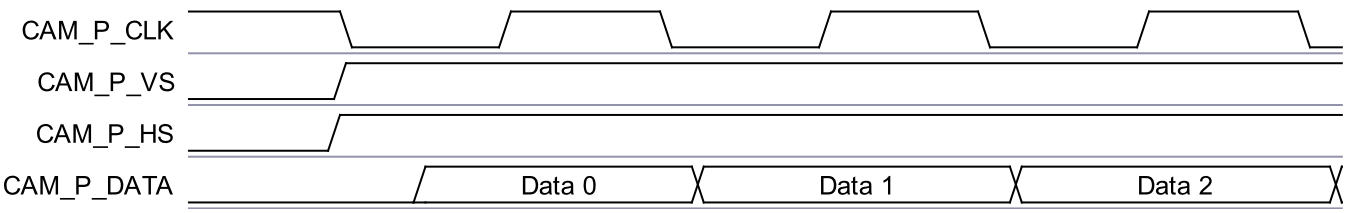

The acquisition can start either on a beginning of a new frame (CAM_P_VS inactive and then active) or immediately in function of the CC_CTRL.NOBT_SYNCHRO register bit. Set CC_CTRL.NOBT_SYNCHRO to 1 to ensure a clean acquisition of the frame.

Copyright © 2017, Texas Instruments Incorporated

Data is accepted as long as CAM_P_HS and CAM_P_VS are both active (when CC_CTRL.NOBT_SYNCHRO is cleared 0):

Figure 14-4. Different Scenarios of CAM_P_HS and CAM_P_VS

Data is valid when both CAM_P_HS and CAM_P_VS are active (high in this example)

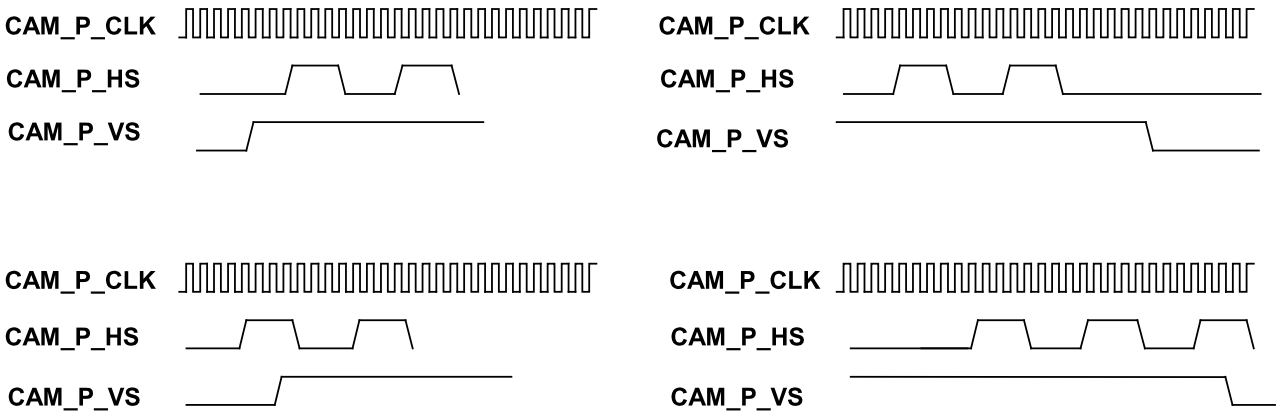

The camera core module supports decimation from the image sensor where CAM_P_HS toggles between pixels.

Figure 14-5. CAM_P_HS Toggles Between Pixels in Decimation

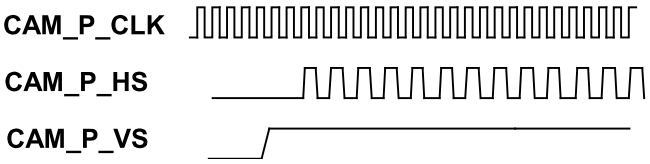

Copyright © 2017, Texas Instruments Incorporated

Figure 14-6. Parallel Camera I/F State Machine

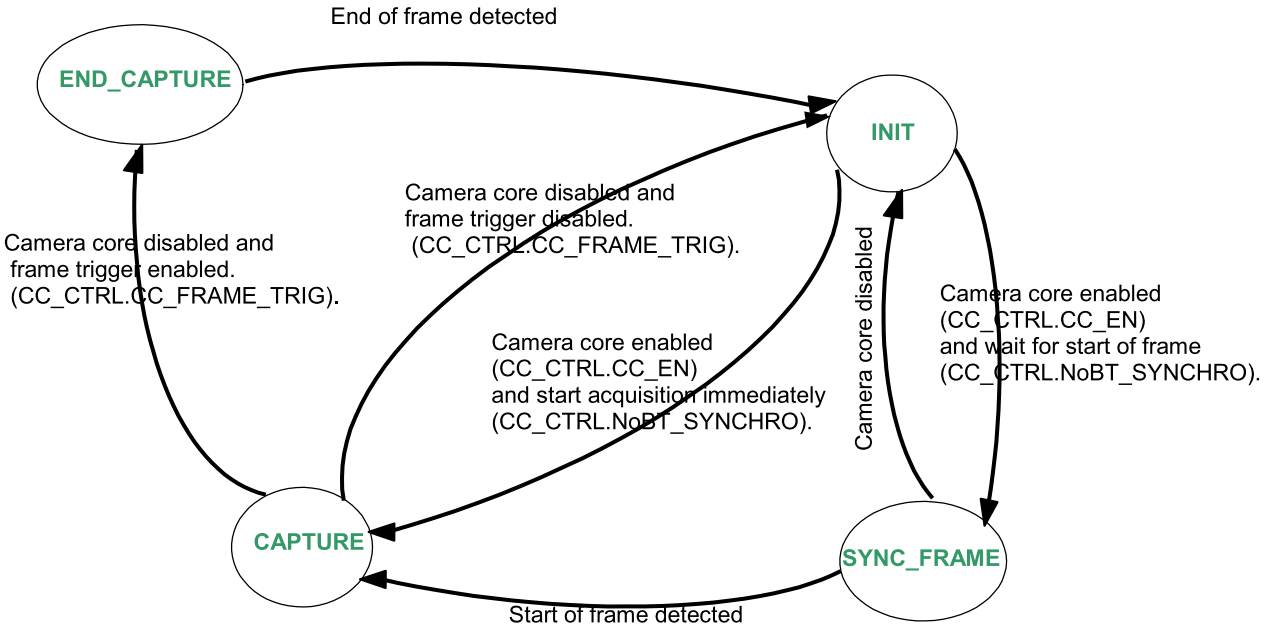

Parallel Camera I/F State Machine

Image data is stored differently in the FIFO, depending on the setting of the bit PAR_ORDERCAM, as shown in Figure 14-7.

Figure 14-7. FIFO Image Data Format

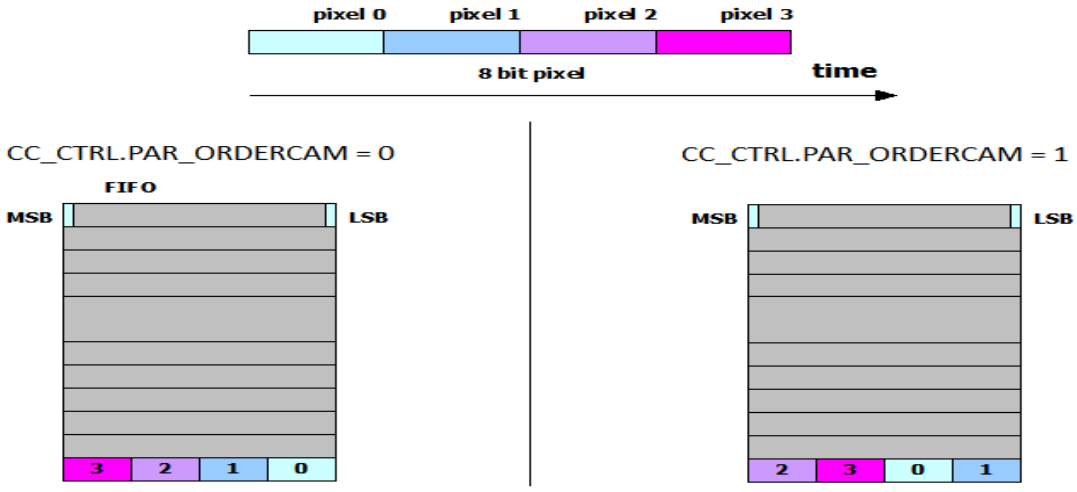

Copyright © 2017, Texas Instruments Incorporated

NOTE: The blanking period is automatically removed by the module.

14.3.2 FIFO Buffer

The internal data FIFO buffer is a 32-bit wide and 64-locations deep. Received data from the 8-bit parallel interface is stored in the buffer until read out by the CPU, which accesses the buffer by reading locations starting at the CC_FIFO_DATA register. When enabled, the buffer can generate DMA requests based on the FIFO_CTRL_DMA.THRESHOLD value.

The FIFO goes into overflow when a write is attempted to a full FIFO, due to the software being too slow or the throughput being too high. The content of the full FIFO is not corrupted by any further writes. During FIFO overflow, it is still possible to read data from the FIFO. Once the FIFO is no longer full, more writes are possible.

The FIFO goes into underflow when a read is attempted from an empty FIFO, due to software (too many read accesses). After an underflow, it is still possible to write. Once the FIFO is no longer empty, it is possible to read from FIFO.

The FIFO is reset by writing a 1 into CC_CTRL.CC_RST. If FIFO_OF_IRQ (or FIFO_UF_IRQ) is enabled, an overflow (or an underflow) generates an interrupt. The interrupt is cleared by writing a 1 to the bit FIFO_OF_IRQ (or FIFO_UF_IRQ); it is not necessary to apply CC_RST beforehand.

14.3.3 Reset

The camera core has two types of reset:

1. **Reset the Camera Core** – Reset the camera core module globally by setting the CC_SYSCONFIG.SoftReset bit to 1.
2. **Reset the FIFOs and DMA control** – The internal state machines of the FIFO and the DMA control circuitry are reset by setting the CC_CTRL.CC_RST bit to 1. This bit is primarily used after an underflow or an overflow, to avoid re-configuring the entire module.

14.3.4 Clock Generation

The module divides down CAM_MCLK and generates CAM_XCLK clock to the external camera sensor. The configuration of the CAM_XCLK divider is programmable by setting the configuration register CC_CTRL_XCLK.

CAM_XCLK is not used by the camera core module itself. It is routed to the chip pin.

Copyright © 2017, Texas Instruments Incorporated

Table 14-2. Ratio of the XCLK Frequency Generator

Ratio	XCLK Based on CAM_MCLK (CAM_MCLK = 120 MHz)
0 (default)	Stable low level, divider not enabled
1	Stable high level, divider not enabled
2	60 MHz (division by 2)
3	40 MHz (division by 3)
4	30 MHz
5	24 MHz
6	20 MHz
7	17.14 MHz
8	15 MHz
9	13.3 MHz
10	12 MHz
11	10.91 MHz
12	10 MHz
...	...
30	4 MHz (division by 30)
31	Bypass (CAM_XCLK = CAM_MCLK)

14.3.5 Interrupt Generation

The interrupt line is asserted (active low) when one the following events takes place:

- FIFO_UF – FIFO underflow
- FIFO_OF – FIFO overflow
- FIFO_THR – FIFO threshold
- FIFO_FULL – FIFO full
- FIFO_NOEMPTY – FIFO not empty (can be used to detect that a first data is written)
- FE – Frame End

When the CC_IRQSTATUS register is read, the register is not automatically reset. To reset the interrupt, write a 1 to the corresponding bit.

Each event that generates an interrupt can be individually enabled using the CC_IRQENABLE. When a particular event is not enabled (for example CC_IRQENABLE[5] = 0), the corresponding status (CC_IRQSTATUS[5] = 1) bit is flagged if the corresponding event occurs. This has no effect on the interrupt line, but can be used by the software to poll the status.

14.3.6 DMA Interface

The camera core module interfaces with a DMA controller. At the system level, the advantage is to discharge the CPU of the data transfers.

The module can generate a DMA request when the FIFO reaches the threshold programmed into CC_CTRL_DMA.FIFO_THRESHOLD.

The de-assertion of the DMA request takes place when a number of 32-bit words equal to the FIFO threshold are read by the DMA controller.

The DMA assertion and de-assertion is illustrated in Figure 14-8, assuming a FIFO threshold of 8 plus some remaining data to end the frame acquisition.

Copyright © 2017, Texas Instruments Incorporated

Figure 14-8. Assertion and De-Assertion of the DMA Request Signal

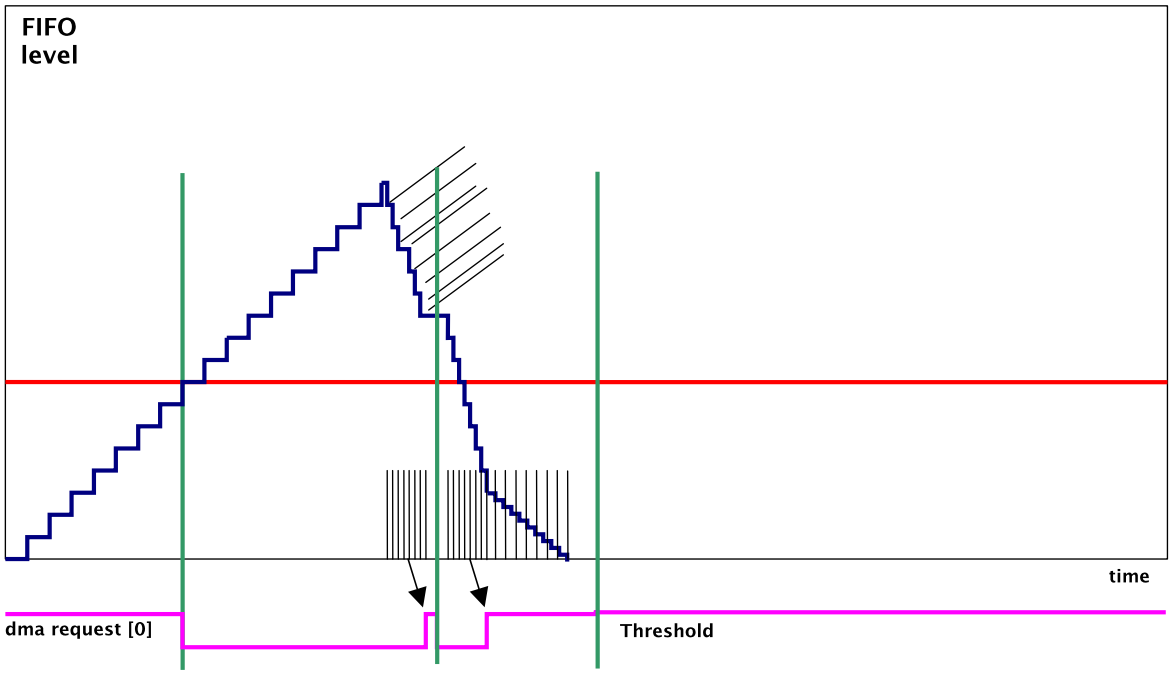

14.4 Programming Model

This section deals with the programming model of the camera core module.

14.4.1 Camera Core Reset

The camera core module can accept a general software reset, propagated through all the hierarchy. This reset can initialize the module, and has the same effect as the hardware reset.

1. Set CC_SYSCONFIG.SOFTRESET to 1.
2. Read CC_SYSSTATUS.RESETDONE to check if it is 1, indicating that the reset took place.

If after 5 reads, CC_SYSSTATUS.RESETDONE still returns 0, assume that an error occurred during the reset stage.

The programmer should not set the CC_SYSCONFIG.SOFTRESET bit to 1 if the camera core module is integrated in a subsystem; it is safer to use the software reset at subsystem level.

14.4.2 Enable the Picture Acquisition

The camera core module must be set using the following programming model:

1. Configure the interrupt generation as required, using the CC_IRQSTATUS and CC_IRQENABLE registers (most common are overflow and underflow interrupts).
2. CC_CTRL_DMA.FIFO_THRESHOLD must be set to a specific value (depending on the DMA module), and CC_CTRL_DMA.DMA_EN must be set to 1 for normal usage of the module.
3. Configure the CC_CTRL_XCLK.
4. Enable the picture acquisition using the CC_CTRL. TI recommends setting CC_FRAME_TRIG and NOBT_SYNCHRO to 1 when CC_EN is set to 1, to start the acquisition. If software only acquires one frame acquisition, use the CC_ONE_SHOT register bit (in this case, the module is automatically disabled at the end of the frame).

Copyright © 2017, Texas Instruments Incorporated

14.4.3 Disable the Picture Acquisition

To end the picture acquisition, set the CC_CTRL.CC_EN to 0 in conjunction with setting CC_CTRL.CC_FRAME_TRIG to 1, to properly disable the frame acquisition. In that case, the camera core ends the current frame at the end, or stops immediately if there is no frame ongoing.

14.5 Interrupt Handling

14.5.1 FIFO_OF_IRQ (FIFO overflow)

1. Set CC_CTRL.CC_EN to 0 and CC_CTRL.CC_FRAME_TRIG to 0, thus stopping the data flow from the image sensor.
2. Clear the interrupt by writing 1 to the CC_IRQSTATUS.FIFO_OF_IRQ bit.
3. If the CC_CTRL_DMA.DMA_EN bit is set to 0, the CPU may keep reading the FIFO_DATA register, or stop reading. If the CC_CTRL_DMA.EN bit is set to 1, the CPU may stop the DMA, or let it run until there are no more DMA requests.
4. Reset FIFO pointers and internal camera core state machines by writing 1 to the CC_CTRL.CC_RST bit.
5. Set the CC_CTRL.CC_EN bit to 1, to re-enable the data flow from the image sensor.

If an overflow occurs, the entire data flow path must be reset to restart cleanly.

14.5.2 FIFO_UF_IRQ (FIFO underflow)

1. Set the CC_CTRL.CC_EN bit to 0 and the CC_CTRL.CC_FRAME_TRIG bit to 0, thus stopping the data flow from the image sensor.
2. Clear the interrupt by writing 1 to the CC_IRQSTATUS.FIFO_UF_IRQ bit.
3. Reset FIFO pointers and internal camera core state machines by writing 1 to the CC_CTRL.CC_RST bit.
4. Set the CC_CTRL.CC_EN bit to 1, to re-enable the data flow from the image sensor.

If an underflow occurs, the entire data flow path must be reset to restart cleanly.

Copyright © 2017, Texas Instruments Incorporated

14.6 Camera Registers

Table 14-3 lists the memory-mapped Camera registers. All register offset addresses not listed in Table 14-3 should be considered as reserved locations and the register contents should not be modified. TI recommends using the APIs instead of directly accessing the register bits in this module.

Table 14-3. Camera Registers

Offset	Acronym	Register Name	Section
10h	CC_SYSCONFIG	System Configuration Register	Section 14.6.1
14h	CC_SYSSTATUS	System Status Register	Section 14.6.2
18h	CC_IRQSTATUS	Interrupt Status Register	Section 14.6.3
1Ch	CC_IRQENABLE	Interrupt Enable Register	Section 14.6.4
40h	CC_CTRL	Control Register	Section 14.6.5
44h	CC_CTRL_DMA	Control DMA Register	Section 14.6.6
48h	CC_CTRL_XCLK	External Clock Control Register	Section 14.6.7
4Ch to 1FCh	CC_FIFODATA	FIFO Data Register	Section 14.6.8

Copyright © 2017, Texas Instruments Incorporated

14.6.1 CC_SYSCONFIG Register (Offset = 10h) [reset = 0h]

CC_SYSCONFIG is shown in Figure 14-9 and described in Table 14-4.

Return to Summary Table.

This register controls the various parameters of the OCP interface (CCP and parallel mode).

Figure 14-9. CC_SYSCONFIG Register

31	30	29	28	27	26	25	24
RESERVED							
R-0h							
23	22	21	20	19	18	17	16
RESERVED							
R-0h							
15	14	13	12	11	10	9	8
RESERVED							
R-0h							
7	6	5	4	3	2	1	0
RESERVED			SIdleMode		RESERVED	SoftReset	AutoIdle
R-0h			R/W-0h		R/W-0h	R/W-0h	R/W-0h

LEGEND: R/W = Read/Write; R = Read only; W1toCl = Write 1 to clear bit; *-n* = value after reset

Table 14-4. CC_SYSCONFIG Register Field Descriptions

Bit	Field	Type	Reset	Description
31-5	RESERVED	R	0h	
4-3	SIdleMode	R/W	0h	Slave interface power management, req/ack control 00h = Force-idle. An idle request is acknowledged unconditionally. 01h = No-idle. An idle request is never acknowledged. 10h = Reserved (Smart-idle not implemented) 11h = Reserved – Do not use
2	RESERVED	R/W	0h	
1	SoftReset	R/W	0h	Software reset Set this bit to 1 to trigger a module reset. The bit is automatically reset by the hardware. During reset it always returns 0. 0h = Normal mode 1h = The module is reset
0	AutoIdle	R/W	0h	Internal OCP clock gating strategy 0h = OCP clock is free-running 1h = Automatic OCP clock gating strategy is applied, based on the OCP interface activity

Copyright © 2017, Texas Instruments Incorporated

14.6.2 CC_SYSSTATUS Register (Offset = 14h) [reset = X]

Register mask: FFFFFFFEh

CC_SYSSTATUS is shown in Figure 14-10 and described in Table 14-5.

Return to Summary Table.

This register provides status information about the module, excluding the interrupt status information (CCP and parallel mode)

Figure 14-10. CC_SYSSTATUS Register

31	30	29	28	27	26	25	24
RESERVED							
R-0h							
23	22	21	20	19	18	17	16
RESERVED							
R-0h							
15	14	13	12	11	10	9	8
RESERVED							
R-0h							
7	6	5	4	3	2	1	0
RESERVED							ResetDone
R-0h							R-X

LEGEND: R/W = Read/Write; R = Read only; W1toCl = Write 1 to clear bit; *-n* = value after reset

Table 14-5. CC_SYSSTATUS Register Field Descriptions

Bit	Field	Type	Reset	Description
31-1	RESERVED	R	0h	
0	ResetDone	R	X	Internal Reset Monitoring 0h = Internal module reset is ongoing. 1h = Reset completed

Copyright © 2017, Texas Instruments Incorporated

14.6.3 CC_IRQSTATUS Register (Offset = 18h) [reset = 0h]

CC_IRQSTATUS is shown in Figure 14-11 and described in Table 14-6.

Return to Summary Table.

The interrupt status regroups all the status of the module internal events that can generate an interrupt (CCP and parallel mode)

Figure 14-11. CC_IRQSTATUS Register

31	30	29	28	27	26	25	24
RESERVED							
R-0h							
23	22	21	20	19	18	17	16
RESERVED				FS_IRQ	LE_IRQ	LS_IRQ	FE_IRQ
R-0h				R/W-0h	R/W-0h	R/W-0h	R/W-0h
15	14	13	12	11	10	9	8
RESERVED				FSP_ERR-IRQ	FW_ERR_IRQ	FSC_ERR_IRQ	SSC_ERR_IRQ
R/W-0h				R/W-0h	R/W-0h	R/W-0h	R/W-0h
7	6	5	4	3	2	1	0
RESERVED			FIFO_NOEMPTY_IRQ	FIFO_FULL_IRQ	FIFO_THR_IRQ	FIFO_OF_IRQ	FIFO_UF_IRQ
R/W-0h			R/W-0h	R/W-0h	R/W-0h	R/W-0h	R/W-0h

LEGEND: R/W = Read/Write; R = Read only; W1toCl = Write 1 to clear bit; *-n* = value after reset

Table 14-6. CC_IRQSTATUS Register Field Descriptions

Bit	Field	Type	Reset	Description
31-20	RESERVED	R	0h	
19	FS_IRQ	R/W	0h	Frame Start has occurred 0h (W) = Event status bit unchanged 0h (R) = Event false 1h (W) = Event status bit is reset 1h (R) = Event is true ("pending")
18	LE_IRQ	R/W	0h	Line End has occurred 0h (W) = Event status bit unchanged 0h (R) = Event false 1h (W) = Event status bit is reset 1h (R) = Event is true ("pending")
17	LS_IRQ	R/W	0h	Line Start has occurred 0h (W) = Event status bit unchanged 0h (R) = Event false 1h (W) = Event status bit is reset 1h (R) = Event is true ("pending")
16	FE_IRQ	R/W	0h	Frame End has occurred 0h (W) = Event status bit unchanged 0h (R) = Event false 1h (W) = Event status bit is reset 1h (R) = Event is true ("pending")
15-12	RESERVED	R/W	0h	
11	FSP_ERR-IRQ	R/W	0h	FSP code error 0h (W) = Event status bit unchanged 0h (R) = Event false 1h (W) = Event status bit is reset 1h (R) = Event is true ("pending")

Copyright © 2017, Texas Instruments Incorporated

Table 14-6. CC_IRQSTATUS Register Field Descriptions (continued)

Bit	Field	Type	Reset	Description
10	FW_ERR_IRQ	R/W	0h	Frame Height Error 0h (W) = Event status bit unchanged 0h (R) = Event false 1h (W) = Event status bit is reset 1h (R) = Event is true ("pending")
9	FSC_ERR_IRQ	R/W	0h	False Synchronization Code 0h (W) = Event status bit unchanged 0h (R) = Event false 1h (W) = Event status bit is reset 1h (R) = Event is true ("pending")
8	SSC_ERR_IRQ	R/W	0h	Shifted Synchronization Code 0h (W) = Event status bit unchanged 0h (R) = Event false 1h (W) = Event status bit is reset 1h (R) = Event is true ("pending")
7-5	RESERVED	R/W	0h	
4	FIFO_NOEMPTY_IRQ	R/W	0h	FIFO is not empty 0h (W) = Event status bit unchanged 0h (R) = Event false 1h (W) = Event status bit is reset 1h (R) = Event is true ("pending")
3	FIFO_FULL_IRQ	R/W	0h	FIFO is full 0h (W) = Event status bit unchanged 0h (R) = Event false 1h (W) = Event status bit is reset 1h (R) = Event is true ("pending")
2	FIFO_THR_IRQ	R/W	0h	FIFO threshold has been reached 0h (W) = Event status bit unchanged 0h (R) = Event false 1h (W) = Event status bit is reset 1h (R) = Event is true ("pending")
1	FIFO_OF_IRQ	R/W	0h	FIFO overflow has occurred 0h (W) = Event status bit unchanged 0h (R) = Event false 1h (W) = Event status bit is reset 1h (R) = Event is true ("pending")
0	FIFO_UF_IRQ	R/W	0h	FIFO underflow has occurred 0h (W) = Event status bit unchanged 0h (R) = Event false 1h (W) = Event status bit is reset 1h (R) = Event is true ("pending")

Copyright © 2017, Texas Instruments Incorporated

14.6.4 CC_IRQENABLE Register (Offset = 1Ch) [reset = 0h]

CC_IRQENABLE is shown in Figure 14-12 and described in Table 14-7.

Return to Summary Table.

The interrupt enable register enables or disables the module internal sources of interrupt on an event-by-event basis (CCP and parallel mode).

Figure 14-12. CC_IRQENABLE Register

31	30	29	28	27	26	25	24
RESERVED							
R/W-0h							
23	22	21	20	19	18	17	16
RESERVED				FS_IRQ_EN	LE_IRQ_EN	LS_IRQ_EN	FE_IRQ_EN
R/W-0h				R/W-0h	R/W-0h	R/W-0h	R/W-0h
15	14	13	12	11	10	9	8
RESERVED				FSP_ERR_IRQ_EN	FW_ERR_IRQ_EN	FSC_ERR_IRQ_EN	SSC_ERR_IRQ_EN
R/W-0h				R/W-0h	R/W-0h	R/W-0h	R/W-0h
7	6	5	4	3	2	1	0
RESERVED			FIFO_NOEMPTY_IRQ_EN	FIFO_FULL_IRQ_EN	FIFO_THR_IRQ_EN	FIFO_OF_IRQ_EN	FIFO_UF_IRQ_EN
R/W-0h			R/W-0h	R/W-0h	R/W-0h	R/W-0h	R/W-0h

LEGEND: R/W = Read/Write; R = Read only; W1toCl = Write 1 to clear bit; *-n* = value after reset

Table 14-7. CC_IRQENABLE Register Field Descriptions

Bit	Field	Type	Reset	Description
31-20	RESERVED	R/W	0h	
19	FS_IRQ_EN	R/W	0h	Frame Start Interrupt Enable 0h = Event is masked 1h = Event generates an interrupt when it occurs
18	LE_IRQ_EN	R/W	0h	Line End Interrupt Enable 0h = Event is masked 1h = Event generates an interrupt when it occurs
17	LS_IRQ_EN	R/W	0h	Line Start Interrupt Enable 0h = Event is masked 1h = Event generates an interrupt when it occurs
16	FE_IRQ_EN	R/W	0h	Frame End Interrupt Enable 0h = Event is masked 1h = Event generates an interrupt when it occurs
15-12	RESERVED	R/W	0h	
11	FSP_ERR_IRQ_EN	R/W	0h	FSP code Interrupt Enable 0h = Event is masked 1h = Event generates an interrupt when it occurs
10	FW_ERR_IRQ_EN	R/W	0h	Frame Height Error Interrupt Enable 0h = Event is masked 1h = Event generates an interrupt when it occurs
9	FSC_ERR_IRQ_EN	R/W	0h	False Synchronization Code Interrupt Enable 0h = Event is masked 1h = Event generates an interrupt when it occurs
8	SSC_ERR_IRQ_EN	R/W	0h	False Synchronization Code Interrupt Enable 0h = Event is masked 1h = Event generates an interrupt when it occurs

Copyright © 2017, Texas Instruments Incorporated

Table 14-7. CC_IRQENABLE Register Field Descriptions (continued)

Bit	Field	Type	Reset	Description
7-5	RESERVED	R/W	0h	
4	FIFO_NOEMPTY_IRQ_EN	R/W	0h	FIFO Not Empty Interrupt Enable 0h = Event is masked 1h = Event generates an interrupt when it occurs
3	FIFO_FULL_IRQ_EN	R/W	0h	FIFO Full Interrupt Enable 0h = Event is masked 1h = Event generates an interrupt when it occurs
2	FIFO_THR_IRQ_EN	R/W	0h	FIFO Threshold Interrupt Enable 0h = Event is masked 1h = Event generates an interrupt when it occurs
1	FIFO_OF_IRQ_EN	R/W	0h	FIFO Overflow Interrupt Enable 0h = Event is masked 1h = Event generates an interrupt when it occurs
0	FIFO_UF_IRQ_EN	R/W	0h	FIFO Underflow Interrupt Enable 0h = Event is masked 1h = Event generates an interrupt when it occurs

Copyright © 2017, Texas Instruments Incorporated

14.6.5 CC_CTRL Register (Offset = 40h) [reset = 1001h]

CC_CTRL is shown in Figure 14-13 and described in Table 14-8.

Return to Summary Table.

This register controls the various parameters of the camera core block (CCP and parallel mode). In CCP_MODE, configure PAR_MODE to 0x0.

Figure 14-13. CC_CTRL Register

31	30	29	28	27	26	25	24
RESERVED							
R/W-0h							
23	22	21	20	19	18	17	16
RESERVED			CC_ONE_SHOT	CC_IF_SYNCHRO	CC_RST	CC_FRAME_TRIG	CC_EN
R/W-0h			R/W-0h	R/W-0h	R/W-0h	R/W-0h	R/W-0h
15	14	13	12	11	10	9	8
RESERVED		NOBT_SYNCHRO	BT_CORRECT	PAR_ORDERCAM	PAR_CLK_POL	NOBT_HS_POL	NOBT_VS_POL
R/W-0h		R/W-0h	R/W-1h	R/W-0h	R/W-0h	R/W-0h	R/W-0h
7	6	5	4	3	2	1	0
RESERVED			PORT_SELECT	PAR_MODE			
R/W-0h			R/W-0h	R/W-1h			

LEGEND: R/W = Read/Write; R = Read only; W1toCl = Write 1 to clear bit; -*n* = value after reset

Table 14-8. CC_CTRL Register Field Descriptions

Bit	Field	Type	Reset	Description
31-21	RESERVED	R/W	0h	
20	CC_ONE_SHOT	R/W	0h	One-shot capability (one frame captured) This must be set in the same time as CC_EN is set to 1. One frame acquisition starts and stops automatically. Reads returns 0 0h = No synchro (most of applications) 1h = Synchro enabled (should never be required)
19	CC_IF_SYNCHRO	R/W	0h	Synchronize all camera sensor inputs This must be set during the configuration phase before CC_EN set to 1. Used in very high frequency to avoid dependancy to the I/O timings. 0h = No synchro (most of applications) 1h = Synchro enabled (should never be required)
18	CC_RST	R/W	0h	Reset all the internal finite state machines of the camera core module by writing a 1 to this bit. Must be applied when CC_EN = 0. Reads returns 0
17	CC_FRAME_TRIG	R/W	0h	Sets the modality in which CC_EN works when disabling the sensor camera core. If CC_FRAME_TRIG = 1, by writing 0 to CC_EN the module is disabled at the end of the frame If CC_FRAME_TRIG = 0, by writing 0 to CC_EN the module is disabled immediately
16	CC_EN	R/W	0h	Enables the sensor interface of the camera core module. By writing 1 to this field, the module is enabled By writing 0 to this field, the module is disabled at the end of the frame if CC_FRAME_TRIG = 1, and is disabled immediately if CC_FRAME_TRIG = 0.
15-14	RESERVED	R/W	0h	

Copyright © 2017, Texas Instruments Incorporated

Table 14-8. CC_CTRL Register Field Descriptions (continued)

Bit	Field	Type	Reset	Description
13	NOBT_SYNCHRO	R/W	0h	Enables start at the beginning of the frame or not in NoBT 0h = Acquisition starts when vertical synchro is high 1h = Acquisition starts when vertical synchro goes from low to high (beginning of the frame) (recommended)
12	BT_CORRECT	R/W	1h	Enables the correct sync codes in BT mode. 0h = Correction is not enabled 1h = Correction is enabled
11	PAR_ORDERCAM	R/W	0h	Enables swap between image-data in parallel mode. 0h = Swap is not enabled 1h = Swap is enabled
10	PAR_CLK_POL	R/W	0h	Inverts the clock coming from the sensor in parallel mode. 0h = Clock not inverted - data sampled on rising edge 1h = Clock inverted - data sampled on falling edge
9	NOBT_HS_POL	R/W	0h	Sets the polarity of the synchronization signals in NOBT parallel mode. 0h = CAM_P_HS is active high 1h = CAM_P_HS is active low
8	NOBT_VS_POL	R/W	0h	Sets the polarity of the synchronization signals in NOBT parallel mode. 0h = CAM_P_VS is active high 1h = CAM_P_VS is active low
7-5	RESERVED	R/W	0h	
4	PORT_SELECT	R/W	0h	Determines which OCP port can perform read access from internal FIFO when DMA_EN bit is set to 1. 0h = OCP 2 1h = OCP 1
3-0	PAR_MODE	R/W	1h	Sets the protocol mode of the camera core module in parallel mode (when CCP_MODE = 0). 000h = Parallel NOBT 8-bit 001h = Parallel NOBT 10-bit 010h = Parallel NOBT 12-bit 011h = Reserved 100h = Parallel BT 8-bit 101h = Parallel BT 10-bit 110h = Reserved 111h = FIFO test mode.

Copyright © 2017, Texas Instruments Incorporated

14.6.6 CC_CTRL_DMA Register (Offset = 44h) [reset = 207h]

CC_CTRL_DMA is shown in Figure 14-14 and described in Table 14-9.

Return to Summary Table.

This register controls the DMA interface of the camera core block (CCP and parallel mode).

Figure 14-14. CC_CTRL_DMA Register

31	30	29	28	27	26	25	24
RESERVED							
R/W-1h							
23	22	21	20	19	18	17	16
RESERVED							
R/W-1h							
15	14	13	12	11	10	9	8
RESERVED							DMA_EN
R/W-1h							R/W-0h
7	6	5	4	3	2	1	0
RESERVED	FIFO_THRESHOLD						
R/W-0h	R/W-7h						

LEGEND: R/W = Read/Write; R = Read only; W1toCl = Write 1 to clear bit; *-n* = value after reset

Table 14-9. CC_CTRL_DMA Register Field Descriptions

Bit	Field	Type	Reset	Description
31-9	RESERVED	R/W	1h	
8	DMA1_DISABLE	R/W	0h	DMA1 disable capability. Only use DMA0 (threshold-based). 0h = DMA1 line can be activated 1h = DMA1 line can not be activated
8	DMA_EN	R/W	0h	Sets the number of DMA request lines. 0h = DMA interface disabled. The DMA request line stays inactive. 1h = DMA interface enabled. The DMA request line is operational.
7	RESERVED	R/W	0h	
6-0	FIFO_THRESHOLD	R/W	7h	Sets the threshold of the FIFO. The assertion of the DMA request line takes place when the threshold is reached. 00000000h = Threshold set to 1 00000001h = Threshold set to 2 ... 01111111h = Threshold set to 128

Copyright © 2017, Texas Instruments Incorporated

14.6.7 CC_CTRL_XCLK Register (Offset = 48h) [reset = 0h]

CC_CTRL_XCLK is shown in Figure 14-15 and described in Table 14-10.

Return to Summary Table.

This register controls the value of the clock divisor used to generate the external clock (parallel mode). Refer to Table 14-2 for details about the ratio of XCLK frequency.

Figure 14-15. CC_CTRL_XCLK Register

31	30	29	28	27	26	25	24	23	22	21	20	19	18	17	16
RESERVED															
R/W-0h															
15	14	13	12	11	10	9	8	7	6	5	4	3	2	1	0
RESERVED											XCLK_DIV				
R/W-0h											R/W-0h				

LEGEND: R/W = Read/Write; R = Read only; W1toCl = Write 1 to clear bit; -*n* = value after reset

Table 14-10. CC_CTRL_XCLK Register Field Descriptions

Bit	Field	Type	Reset	Description
31-5	RESERVED	R/W	0h	
4-0	XCLK_DIV	R/W	0h	Sets the clock divisor value for CAM_XCLK generation. Based on CAM_MCLK (value of CAM_MCLK IS 96 MHz). Divider not enabled 00000000h = CAM_XCLK Stable low level 00000001h = CAM_XCLK Stable high level from 2 to 30 = CAM_XCLK = CAM_MCLK / XCLK DIV 00011111h = Bypass - CAM_XCLK = CAM_MCLK

Copyright © 2017, Texas Instruments Incorporated

14.6.8 CC_FIFODATA Register (Offset = 4Ch) [reset = X]

CC_FIFODATA is shown in Figure 14-16 and described in Table 14-11.

Return to Summary Table.

This register allows the user to write and read from the FIFO (CCP and parallel mode). Refer to Section 14.3.2 for details about FIFO write and read accesses into this register bank.

Figure 14-16. CC_FIFODATA Register

31	30	29	28	27	26	25	24	23	22	21	20	19	18	17	16	15	14	13	12	11	10	9	8	7	6	5	4	3	2	1	0
FIFO_DATA																															
R/W-X																															

LEGEND: R/W = Read/Write; R = Read only; W1toCl = Write 1 to clear bit; *-n* = value after reset

Table 14-11. CC_FIFODATA Register Field Descriptions

Bit	Field	Type	Reset	Description
31-0	FIFO_DATA	R/W	X	Reads or writes the 32-bit word from or into the FIFO.

Copyright © 2017, Texas Instruments Incorporated

14.7 Peripheral Library APIs

This section lists the software APIs hosted in the CC32xx SDK (peripheral library) for configuring and using the camera interface module.

void CameraReset(unsigned long ulBase)

- **Description**: This function resets the camera core.
- **Parameters**:
  - ***ulBase*** Base address of the camera module
- **Return**: None

void CameraXClkConfig(unsigned long ulBase, unsigned long ulCamClkIn, unsigned long ulXClk)

- **Description**: This function sets the internal clock divider based on ulCamClkIn to generate XCLK as specified be ulXClk. The maximum supported division is 30.
- **Parameters**:
  - ***ulBase*** Base address of the camera module
  - ***ulCamClkIn*** Input clock frequency to camera module
  - ***ulXClk*** Required XCLK frequency
- **Return**: None

void CameraParamsConfig(unsigned long ulBase, unsigned long ulHSPol, unsigned long ulVSPol, unsigned long ulFlags)

- **Description**: This function sets different camera parameters.
- **Parameters**:
  - ***ulBase*** Base address of the camera module
  - ***ulHSPol*** sets the HSync polarity
  - ***ulVSPol*** Sets the VSync polarity
  - ***ulFlags*** Configuration flags

  The parameter ulHSPol should be on the following:
  - ***CAM_HS_POL_HI HSYNC*** Polarity is active high
  - ***CAM_HS_POL_LO HSYNC*** Polarity is active low

  The parameter ulVSPol should be on the following:
  - ***CAM_VS_POL_HI VSYNC*** Polarity is active high
  - ***CAM_VS_POL_LO VSYNC*** Polarity is active low

  The parameter ulFlags can be logical OR of one or more of the following or 0:
  - ***CAM_PCLK_RISE_EDGE PCLK*** Polarity is active high
  - ***CAM_PCLK_FALL_EDGE PCLK*** Polarity is active low
  - ***CAM_ORDERCAM_SWAP*** Swap the byte order
  - ***CAM_NOBT_SYNCHRO*** Enable to start capture at start of frame
  - ***CAM_IF_SYNCHRO*** Synchronize all sensor inputs
- **Return**: None

void CameraXClkSet(unsigned long ulBase, unsigned char bXClkFlags)

- **Description**: This function sets the internal divide in specified mode.
- **Parameters**:
  - ***ulBase*** Base address of the camera module
  - ***bXClkFlags*** Sets the divider mode

  The parameter bXClkFlags should be one of the following:
  - ***CAM_XCLK_STABLE_LO*** XCLK line will be pulled low
  - ***CAM_XCLK_STABLE_HI*** XCLK line will be pulled high
  - ***CAM_XCLK_DIV_BYPASS*** XCLK divider is in bypass mode

Copyright © 2017, Texas Instruments Incorporated

- **Return**: None

void CameraDMAEnable(unsigned long ulBase)

- **Description**: This function enables a transfer request to DMA from the camera. DMA-specific configuration must be done separately.
- **Parameters**:
  - ***ulBase*** Base address of the camera module.
- **Return**: None

void CameraDMADisable(unsigned long ulBase)

- **Description**: This function masks a transfer request to DMA from the camera.
- **Parameters**:
  - ***ulBase*** Base address of the camera module.
- **Return**: None

void CameraThresholdSet(unsigned long ulBase, unsigned long ulThreshold)

- **Description**: This function sets the FIFO threshold for a DMA transfer request.
- **Parameters**:
  - ***ulBase*** Base address of the camera module
  - ***ulThreshold*** Specifies the FIFO level at which a DMA request is generated. This can be in the range of 1 to 64.
- **Return**: None

void CameraIntRegister(unsigned long ulBase, void (*pfnHandler)(void))

- **Description**: This function registers and enables a global camera interrupt from the interrupt controller. Individual camera interrupts source should be enabled using CameraIntEnable().
- **Parameters**:
  - ***ulBase*** Base address of the camera module
- **Return**: None

void CameraIntUnregister(unsigned long ulBase)

- **Description**: This function unregisters and disables the global camera interrupt from the interrupt controller.
- **Parameters**:
  - ***ulBase*** Base address of the camera module
- **Return**: None.

void CameraIntEnable(unsigned long ulBase, unsigned long ulIntFlags)

- **Description**: This function enables individual camera interrupt sources.
- **Parameters**:
  - ***ulBase*** Base address of the camera module
  - ***ulIntFlags*** Bit mask of the interrupt sources to be enabled

  The parameter ulIntFlags should be logical OR of one or more of the following:
  - ***CAM_INT_DMA DMA*** done interrupt
  - ***CAM_INT_FE*** Frame end interrupt
  - ***CAM_INT_FSC_ERR*** Frame sync error interrupt
  - ***CAM_INT_FIFO_NOEMPTY*** FIFO empty interrupt
  - ***CAM_INT_FIFO_FULL*** FIFO full interrupt
  - ***CAM_INT_FIFO_THR*** FIFO reached threshold interrupt
  - ***CAM_INT_FIFO_OF*** FIFO overflow interrupt
  - ***CAN_INT_FIFO_UR*** FIFO underflow interrupt
- **Return**: None

Copyright © 2017, Texas Instruments Incorporated

void CameraIntDisable(unsigned long ulBase, unsigned long ulIntFlags)

- **Description**: This function disables individual camera interrupt sources.
- **Parameters**:
  - ***ulBase*** Base address of the camera module
  - ***ulIntFlags*** Bit mask of the interrupt sources to be disabled
- **Return**: None

unsigned long CameraIntStatus(unsigned long ulBase)

- **Description**: This functions returns the current interrupt status for the camera.
- **Parameters**:
  - ***ulBase*** Base address of the camera module
- **Return**: Returns the current interrupt status, enumerated as a bit field of values described in CameraIntEnable().

void CameraIntClear(unsigned long ulBase, unsigned long ulIntFlags)

- **Description**: This function clears individual camera interrupt sources.
- **Parameters**:
  - ***ulBase*** Base address of the camera module
  - ***ulIntFlags*** Bit mask of the interrupt sources to be cleared
- **Return**: None

void CameraCaptureStart(unsigned long ulBase)

- **Description**: This function starts the image capture over the configured camera interface. This function should be called after completely configuring the camera module.
- **Parameters**:
  - ***ulBase*** Base address of the camera module
- **Return**: None

void CameraCaptureStop(unsigned long ulBase, tBoolean bImmediate)

- **Description**: This function stops the image capture over the camera interface. The capture is stopped either immediately or at the end of the current frame, based on the bImmediate parameter.
- **Parameters**:
  - ***ulBase*** Base address of the camera module
  - ***bImmediate*** True to stop capture immediately, False to stop at the end of the frame
- **Return**: None

void CameraBufferRead(unsigned long ulBase,unsigned long *pBuffer, unsigned char ucSize)

- **Description**: This function reads the camera buffer (FIFO).
- **Parameters**:
  - ***ulBase*** Base address of the camera module
  - ***pBuffer*** Pointer to the read buffer
  - ***ucSize*** Size to data to be read
- **Return**: None

Copyright © 2017, Texas Instruments Incorporated

14.8 Developer's Guide

14.8.1 Using Peripheral Driver APIs for Capturing an Image

1. The clock for camera peripheral must be configured and enabled. Peripherals are clock-gated by default, and generate a bus fault if accessed without enabling the clock. The peripheral is ready to use after the software reset:

   ```
   MAP_PRCMPeripheralClkEnable(PRCM_CAMERA, PRCM_RUN_MODE_CLK);
   MAP_PRCMPeripheralReset(PRCM_CAMERA);
   ```

2. The camera parameters must be set next, using the peripheral driver API CameraParamsConfig. This function sets the appropriate bits in the CAMERA_O_CC_CTRL register for controlling the various parameters of the camera control block. The parameters are:
   - ulHSPol: Sets the polarity of the horizontal synchronization signal (CAM_P_HS). It can be either CAM_HS_POL_HI or CAM_HS_POL_LO.
   - ulHSPol: Sets the polarity of the vertical synchronization signal (CAM_P_VS). It can be either CAM_VS_POL_HI or CAM_VS_POL_LO.
   - ulFlags:
     – Should be set to (CAM_ORDERCAM_SWAP | CAM_NOBT_SYNCHRO) for starting acquisition/capture when CAM_P_VS goes from low to high with swapping the image data in FIFO. See Section 14.3.1 for more details.
     – Should be set to CAM_NOBT_SYNCHRO for starting acquisition/capture when CAM_P_VS goes from low to high without swapping the image data in FIFO.

     For high frequency operations, set CAM_IF_SYNCHRO to avoid dependency on the I/O timings.
3. The interrupt-handler must be registered, using the peripheral driver API CameraIntRegister. This function registers and enables global camera interrupts from the interrupt controller.
4. The external-clock must be derived by programming the clock-divider values. The peripheral driver API CameraXClkConfig sets the appropriate bits in this register for setting the internal clock divider.
5. MCLK is, by default, set to 120 MHz, and cannot be modified. Hence, an XCLK of:
   - 5 MHz can be derived by calling:

     ```
     CameraXClkConfig(CAMERA_BASE, 120000000, 5000000)
     ```

   - 10 MHz can be derived by calling:

     ```
     CameraXClkConfig(CAMERA_BASE, 120000000, 10000000)
     ```

   Note: The maximum supported division is 30; a 2-MHz XCLK cannot be derived using a 120-MHz MCLK.
6. The FIFO threshold must be set using the peripheral driver API CameraThresholdSet. This function sets the threshold at which to generate a DMA request.

   ```
   CameraThresholdSet(CAMERA_BASE, 8);
   ```

7. For handling the image data that is not a multiple of a FIFO threshold, the frame-end interrupt must be registered using the peripheral API CameraIntEnable. This generates an interrupt at the end of every frame:

   ```
   CameraIntEnable(CAMERA_BASE, CAM_INT_FE)
   ```

8. The DMA interface of the camera control block must be enabled by using the peripheral driver API CameraDMAEnable.

   ```
   CameraDMAEnable(CAMERA_BASE)
   ```

9. The DMA interface of the camera control block must be configured next. As an example, configure the DMA in ping-pong mode:
   - First initialize the DMA interface using the peripheral driver API UDMAInit.
   - The ping-pong transfer can be set up using the peripheral driver API DMASetupTransfer. The code below code shows how this API could be used:

Copyright © 2017, Texas Instruments Incorporated

```
DMASetupTransfer(UDMA_CH22_CAMERA, UDMA_MODE_PINGPONG, <total_dma_elements>>, UDMA_SIZE_32,
                                    UDMA_ARB_8, (void *)CAM_BUFFER_ADDR, UDMA_SRC_INC_32,
                                    (void *)<data_buffer>,UDMA_DST_INC_32);
<data_buffer>+=<total_dma_elements>;/* Setup the buffer for pong */
DMASetupTransfer(UDMA_CH22_CAMERA|UDMA_ALT_SELECT,
                                    UDMA_MODE_PINGPONG, <total_dma_elements>,UDMA_SIZE_32,
UDMA_ARB_8, (void *)CAM_BUFFER_ADDR,
                                    UDMA_SRC_INC_32, (void
*)<data_buffer>,UDMA_DST_INC_32);<data_buffer> += <total_dma_elements>;/* Setup buffer for
next ping */
```

10. The interrupts must be cleared and unmasked, by setting BIT-8 of DMA_DONE_INT_ACK and DMA_DONE_INT_MASK_CLR, respectively.
11. The image can now be captured using the peripheral driver API CameraCaptureStart. This function enables the sensor interface of the camera core module.
    - An interrupt is continuously generated until the capture is stopped, and the interrupt-handler registered above handles the interrupts appropriately.
    - Because the DMA is configured for ping-pong transfer, the <data_buffer> must be adjusted for the next ping-pong transaction.
    - Depending on the value set for <total_dma_elements>, a DMA-Done interrupt is generated every time after <total_dma_elements> elements are copied to memory.

    Code snippet for handling the camera interrupts:

```
void <camera_interrupt_handler>() {
    /* Stop capture on receiving a frame-end */
    if(CameraIntStatus(CAMERA_BASE) &amp;amp;CAM_INT_FE)
    {
        CameraIntClear(CAMERA_BASE, CAM_INT_FE);
        CameraCaptureStop(CAMERA_BASE, true);
    }

    /* Check if 'CAM_THRESHHOLD_DMA_DONE' is active */
    if(<write_register>(DMA_DONE_INT_STS_RAW) &amp;amp; (1<<8))
                {
        /* Clear the interrupt */
<write_register>(DMA_DONE_INT_ACK) |= 1 << 8; <total_dma_elements> += <total_dma_elements>
* <32-bits>; /* For every iteration, set either the ping or pong transactions */
        if(<check condition for even iterations>)
                                {
            DMASetupTransfer(UDMA_CH22_CAMERA, UDMA_MODE_PINGPONG,<total_dma_elements>,
UDMA_SIZE_32,
                                                UDMA_ARB_8, (void *)CAM_BUFFER_ADDR,
UDMA_SRC_INC_32,
                                                (void *)<data_buffer>, UDMA_DST_INC_32);

        }
        else(<check condition for odd iterations>)         {
            DMASetupTransfer(UDMA_CH22_CAMERA|UDMA_ALT_SELECT,
                                                UDMA_MODE_PINGPONG, <total_dma_elements>,
UDMA_SIZE_32, UDMA_ARB_8, (void *)CAM_BUFFER_ADDR,
                                                UDMA_SRC_INC_32, (void *)<data_buffer>,
UDMA_DST_INC_32);
        }

        /* Setup the buffer for the next ping/pong */<data_buffer> += <total_dma_elements>;
        if (<on an error>)
                {
            /* Disable DMA and mask 'CAM_THRESHHOLD_DMA_DONE' */
            UDMAStopTransfer(UDMA_CH22_CAMERA);<write_register>(0x44026090) |= 1 << 8;

                }
}
```

12. The capture can be stopped using the peripheral driver API CameraCaptureStop. This function disables the sensor interface of the camera core module. The sensor interface can be disabled

Copyright © 2017, Texas Instruments Incorporated

immediately, or at the end of current frame.

13. For stopping the image capture after a frame, disable the sensor interface immediately after the CAM_INT_FE interrupt.

14.8.2 Using Peripheral Driver APIs for Communicating with Image Sensors

Most image sensors provide a two-wire serial interface for external MCUs to control them. This section shows how to use the CC32xx I2C interface to communicate with these image sensors. The CC32xx includes one I2C module operating with standard (100-Kbps) or fast (400-Kbps) transmission speeds.

First configure and enable the clock for I2C peripheral. Peripherals are clock-gated by default and generate a bus fault if accessed without enabling the clock. The peripheral should be ready to use after the software reset.

```
MAP_PRCMPeripheralClkEnable(PRCM_I2CA0, PRCM_RUN_MODE_CLK);
MAP_PRCMPeripheralReset(PRCM_I2CA0);
```

The I2C master block must be configured and enabled next in either standard or fast mode, using the peripheral driver API MAP_I2CMasterInitExpClk. The function internally computes the clock divider to achieve the fastest speed less than or equal to the desired speed.

```
MAP_I2CMasterInitExpClk (I2C_BASE, SYS_CLK, true); /* SYS_CLK is set to 80MHz */
```

The commands to the image sensor can then be written, and responses read. Normally a standard communication consists of:

- Generating a START condition
- Setting a I2C slave address
- Transferring data
- Generating a STOP condition

The master sends the slave address followed by the START condition. A slave with an address that matches this address responds by returning an acknowledgment bit. Once the slave addressing is achieved, data transfer can proceed byte-by-byte.

Peripheral driver APIs for writing and reading to and from an I2C slave:

I2CMasterSlaveAddrSet

- Description: Sets the address that the I2C master places on the bus.
- Parameters:
  - *ui32Base* is the base address of the I2C master module.
  - *ui8SlaveAddr* is an 7-bit slave address.
  - *bReceive* is the flag indicating the type of communication with the slave.

I2CMasterDataPut

- Description: Transmits a byte from the I2C master.
- Parameters:
  - *ui32Base* is the base address of the I2C master module.
  - *ui8Data* is data to be transmitted from the I2C master.

I2CMasterDataGet

- Description: Receives a byte that has been sent to the I2C master.
- Parameters:
  - *ui32Base* is the base address of the I2C master module

I2CMasterIntClearEx

- Description: Clears I2C master interrupt sources.
- Parameters:
  - *ui32Base* is the base address of the I2C master module.
  - *ui32IntFlags* is a bit mask of the interrupt sources to be cleared.

Copyright © 2017, Texas Instruments Incorporated

I2CMasterTimeoutSet

- Description: Sets the master clock timeout value.
- Parameters:
  - *ui32Base* is the base address of the I2C master module.
  - *ui32Value* is the number of I2C clocks before the timeout is asserted.

I2CMasterControl

- Description: Controls the state of the I2C master module.
- Parameters:
  - *ui32Base* is the base address of the I2C master module.
  - *ui32Cmd* is the command to be issued to the I2C master module.

I2CMasterIntStatusEx

- Description: Gets the current I2C master interrupt status.
- Parameters:
  - *ui32Base* is the base address of the I2C master module.
  - *bMasked* is false if the raw interrupt status is requested, and true if the masked interrupt status is requested.

Copyright © 2017, Texas Instruments Incorporated

Power, Reset and Clock Management

Topic Page

15.1 Overview 493
15.2 Power Management Control Architecture 497
15.3 PRCM APIs 500
15.4 Peripheral Macros 506
15.5 Power Management Framework 507
15.6 PRCM Registers 508

Copyright © 2017, Texas Instruments Incorporated

15.1 Overview

The CC32xx SoC incorporates a highly optimized on-chip power management unit capable of operating directly from battery, without any external regulator.

The on-chip PMU includes a set of high-efficiency, fast transient response DC-DC converters, LDOs, and reference voltage generators. The on-chip PMU is connected to the input supply directly, and generates the internal voltages required by the different sections of the chip across power modes. The PMU is tightly synchronized with the WLAN radio, and avoids interference during radio receive and transmit operations.

The chip supports two supply configurations, which provide flexibility to system designers. In one configuration, the input supply voltage at chip pin supports a range of 2.1 V to 3.6 V for active operation. In the second configuration, the chip can be supplied a pre-regulated 1.85 V that meets the ripple, load-transient, and peak current requirements. Refer to the CC3200 data sheet (SWAS032) for electrical details.

15.1.1 VBAT Wide-Voltage Connection

In the wide-voltage battery connection, the device is powered directly by the battery or pre-regulated 3.3-V supply. All other voltages required to operate the device are generated internally by the DC-DC converters. This is the most common usage for the device, as it supports wide-voltage operation from 2.1 V to 3.6 V.

15.1.2 Pre-Regulated 1.85 V

The pre-regulated 1.85-V mode of operation applies an external regulated 1.85 V directly to the pins 10, 25, 33, 36, 37, 39, 44, 48, and 54 of the device. The VBAT and the VIO are also connected to the 1.85-V supply. The ANA1 DC-DC and PA DC-DC converters are bypassed. This mode provides the lowest BOM count version.

NOTE: The chip auto-detects which of the two configurations is being used based on the state of the DC-DC pins. The chip then enables the DC-DCs accordingly.

Copyright © 2017, Texas Instruments Incorporated

Figure 15-1. Power Management Unit Supports Two Supply Configurations

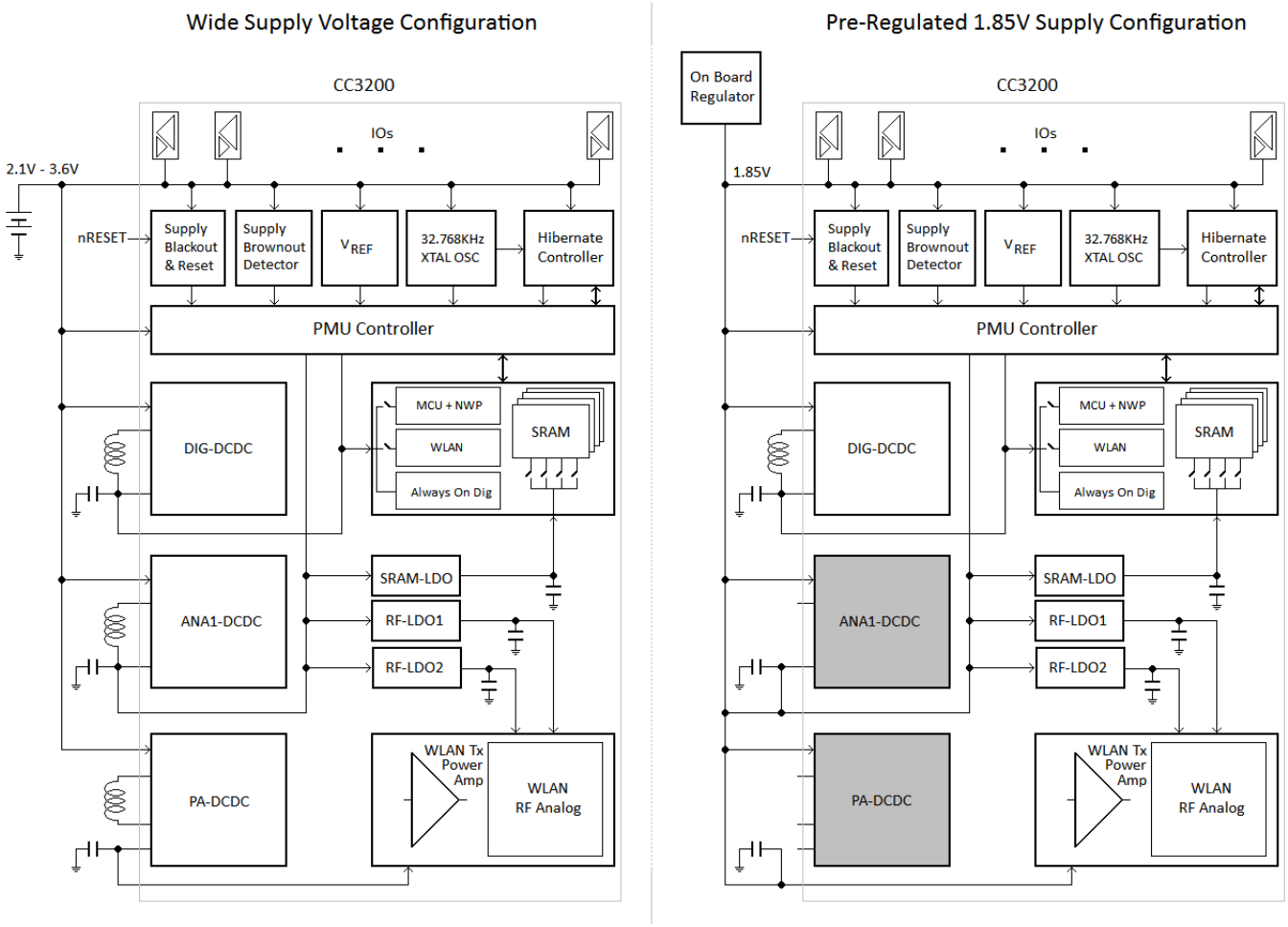

The PMU includes the following key modules:

- Dig-DCDC: Generates 0.9-V to 1.2-V regulated output for digital core logic.
- ANA1-DCDC: Generates 1.8-V to 1.9-V regulated output for analog and RF.
- PA-DCDC: Generates 1.8-V to 1.9-V regulated output for WLAN transmit power-amplifier.
- Precision voltage reference
- Supply brown-out monitor:
  - Brownout level for wide-voltage mode: 2.1 V.
  - Brownout level for pre-regulated 1.85-V mode: 1.74 V.
- 32.768-KHz crystal oscillator:
  - Generates precision 32.768 KHz for RTC and WLAN power-save protocol timing.
  - Supports feeding an external square wave 32.768-KHz clock in lieu of XTAL.
- 32-KHz RC oscillator for chip startup: The 32.768-KHz XTAL oscillator requires 1.1 sec to become stable after first time power-up or chip reset (such as nRESET). Until the slow XTAL clock is stable, the system uses the alternate RC slow-clock.
- Hibernate controller: Implements the lowest current sleep mode of the chip (hibernate mode), and consists of the following functions:
  - Chip wake-up controller
  - RTC counter and RTC-based wakeup

Copyright © 2017, Texas Instruments Incorporated

  - GPIO monitor and GPIO-based wakeup
  - 2×32-bit general purpose direct-battery powered retention register
  - Accessible from application processor through SoC-level interconnect
  - Manages the PMU and I/Os when core digital is powered off
- PMU controller:
  - Controls all the low-level real-time sequencing of the DC-DCs, LDOs, and references.
  - Implements the low-level sequences associated with sleep mode transitions
  - Not directly accessible from the application processor
  - PMU state transitions are initiated by control signals from the PRCM

Refer to the CC3200 data sheet (SWAS032) for the chip wake-up sequence and timing parameters.

15.1.3 Supply Brownout and Blackout

BROWNOUT is the state where the supply voltage falls below the chip brownout threshold. For wide voltage mode, $V_{brownout}$ = 2.1 V. For pre-regulated 1.85-V mode, $V_{brownout}$ = 1.74 V. All DC-DCs are disabled and all digital logic is power-gated, as long as the chip is in BROWNOUT state. The hibernate controller, 2×32-bit general purpose retention register inside the hibernate controller, the 32.768-KHz XOSC, and the RTC counter are not impacted by BROWNOUT and continue to function. Once the supply voltage rises above $V_{brownout}$, the chip reboots.

BLACKOUT is the condition where the CC3x PMU incorporates a continuous time coarse analog supply voltage monitor that forces the PMU, including the hibernate controller, into a reset state where $V_{supply} < V_{blackout}$. $V_{blackout}$ is typically 1.4 V and varies with temperature.

BLACKOUT ensures that there is a deterministic reset of the control registers and flags inside the hibernate module just before the supply falls, to ensure that the system operations are terminated reliably. In this way, when a proper supply level is restored, the PMU starts from a clean reset state without any corrupt control bits carried over from last session. The hibernate controller, 2×32-bit general purpose retention register inside the hibernate controller, the 32.768-KHz XOSC, and the RTC counter are all reset during BLACKOUT. For a functional perspective, the effect of BLACKOUT is similar to that of pulling down the chip reset pin (nRESET).

15.1.4 Application Processor Power Modes

From the application processor (Cortex M4 and its peripherals) standpoint, the following power modes are supported:

- ACTIVE mode
  - The processor is clocked at 80 MHz.
  - The required set of peripherals are running at configured clock rates.
- SLEEP mode
  - The processor is clock-gated until an interrupt event.
  - Reduces consumption by 3 mA with respect to ACTIVE.
  - Immediate wakeup.
  - The required set of peripherals is running at pre-configured clock rates.
  - By default, the sleep clock to the peripherals is disabled. If the application chooses to enter sleep anytime and requires certain peripherals to be active, the sleep clock to the peripheral must be enabled in advance (see Section 15.6 and Section 15.3).
- DEEPSLEEP mode
  - The processor is clock-gated and PLL is disabled until an interrupt event.
  - Reduces consumption by 5 mA with respect to ACTIVE.
  - Using peripherals in conjunction with DEEPSLEEP is not recommended in the CC32xx.
- Low-power deep-sleep mode (LPDS)
  - Up to 256 Kbyte of SRAM retention. No logic retention.

Copyright © 2017, Texas Instruments Incorporated

    - TI SW API and framework provided for transparent save and restore of processor context, peripheral, and pin configurations.
  - Total system current (including Wi-Fi and network periodic wakeup) is as low as 700 uA.
  - When networking and Wi-Fi subsystems are disabled, the chip draws around 120 uA.
    - 40-MHz XTAL and PLL are turned off. 32.768-KHz XTAL is kept alive.
    - Most digital logic is turned off. Digital supply voltage is reduced to 0.9 V.
    - SRAM can be retained in multiples of 64 KB.
  - Processor and peripheral registers are not retained. Global always ON configurations at SoC level are retained.
  - Configurable wake-on-pad (one out of six pads).
  - Less that 5-mS wake-up latency.
  - Recommended for ultra-low power, always-connected cloud and Wi-Fi applications.
- Hibernate mode (HIB)
  - 32.768-KHz XTAL is kept alive .
  - Wake on RTC (for example, the 32-KHz slow clock counter) or selected GPIO.
  - No SRAM or logic retention.
  - 2×32-bit general purpose retention registers.
    - These registers are powered by the input supply directly, and retain their content as long as the chip is not reset (nRESET=1) and the supply stays above the blackout level (1.4 V).
  - Ultra-low current of 4 uA, including RTC.
  - Less than 10-mS wake-up latency.
  - Recommended for ultra-low power, infrequently-connected cloud and Wi-Fi applications.
  - A brief hibernation may also be used by software to implement a full system reboot as part of an over-the-air software upgrade (OTA), or to restore the system to a guaranteed clean state following a watchdog reset.
  - Once a brownout condition is detected, the application software may choose to enter hibernate mode to prevent further oscillatory brownouts that may cause unpredictable system behavior and possible damage to the end equipment. The system can subsequently be made to restart on a RTC timer, on a chip reset, or on plugging of new batteries.

For CC32xx applications where battery life is critical, maximize the fraction of time spent in LPDS or hibernate modes compared to active and other sleep modes (SLEEP, DEEPSLEEP).

Copyright © 2017, Texas Instruments Incorporated

Figure 15-2. Sleep Modes

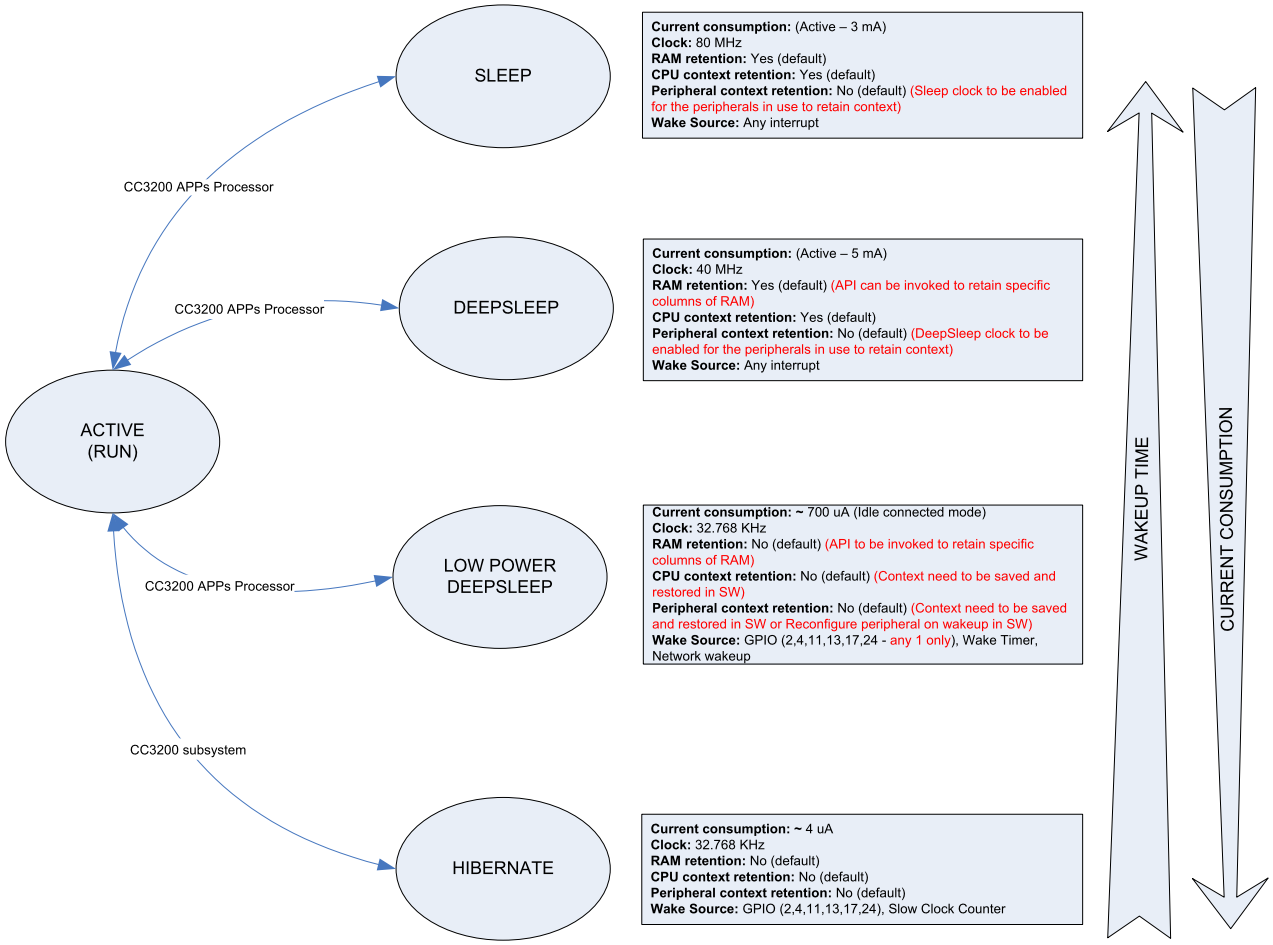

15.2 Power Management Control Architecture

The CC32xx Wi-Fi microcontroller is a multi-processor system-on-chip with several subsystems independently cycling between active and sleep states (application processor, network processor, WLAN-MAC, and WLAN-PHY) for optimal energy usage. The activities of various subsystems are tied to the data and management traffic. In absence of events and traffic, all the systems are typically in a sleep state (LPDS).

The timing of sleep and wakeup do not need to be synchronized across subsystems. For example, in an idle-connected case, when the association to the AP is maintained most of the time, the WLAN subsystem is in LPDS and wakes up periodically for short intervals, only to listen for any incoming beacon packets and delivery pending messages from the AP (apart from occasional keep alive packet transmissions). While this repeats in multiples of the beacon period (104 mS), the application processor may implement its own sleep strategy with a different periodicity.

An advanced power management scheme has been implemented at the CC32xx chip level. This scheme handles the asynchronous sleep-wake requirements of multiple processors and Wi-Fi radio subsystems in a way that is transparent to the software, yet energy efficient.

The chip-level power management scheme is such that the application program is unaware of the power state transitions of the other subsystems. This approach insulates the user from the real-time complexities of a multi-processor system; it improves robustness by eliminating race conditions and simplifies the application development process.

Copyright © 2017, Texas Instruments Incorporated

As a result, the power mode of the chip can be different from the sleep state of the application software code. For example, when the application code requests for LPDS mode it is granted immediately; however, if the network processor or WLAN is active at that time, the chip does not enter LPDS until they are finished. In that case, the application processor is held under reset, which produces a safe result for the software, regardless of when the digital logic gets power-gated and when the voltage drops to 0.9 V. Similarly, on wake event for a particular subsystem, the chip as a whole transitions into active state (VDD_DIG = 1.2 V, 40-MHz XOSC and PLL-enabled) and then only that subsystem is awakened from LPDS. The other subsystems are held in reset until their respective wake events.

Table 15-1 shows the feasible combinations of power states between the application processor and the network (including WLAN) subsystems. Refer to the CC3200 data sheet (SWAS032) for details of current consumption for these combinations.

Table 15-1. Possible PM State Combinations of Application Processor and Network Subsystem (NWP+WLAN)

Application Processor (MCU) Software State	Network Processor and WLAN Software State	Resulting Power State of Chip, Core Logic Voltage, and Clock
ACTIVE	ACTIVE	ACTIVE (1.2 V, 80 MHz, 32 KHz)
ACTIVE	SLEEP	ACTIVE (1.2 V, 80 MHz, 32 KHz)
ACTIVE	LPDS (Fake-LPDS)	ACTIVE (1.2 V, 80 MHz, 32 KHz)
SLEEP	ACTIVE	ACTIVE (1.2 V, 80 MHz, 32 KHz)
SLEEP	SLEEP	ACTIVE (1.2 V, 80 MHz, 32 KHz)
SLEEP	LPDS (Fake-LPDS)	ACTIVE (1.2 V, 80 MHz, 32 KHz)
LPDS (Fake-LPDS)	ACTIVE	ACTIVE (1.2 V, 80 MHz, 32 KHz)
LPDS (Fake-LPDS)	SLEEP	ACTIVE (1.2 V, 80 MHz, 32 KHz)
LPDS (Fake-LPDS)	LPDS (Fake-LPDS)	LPDS (True-LPDS) (0.9 V, 32 KHz)
Request For HIBERNATE	Don't Care	HIBERNATE (0 V, 32 KHz)

Copyright © 2017, Texas Instruments Incorporated

Figure 15-3 shows the high-level architecture of the CC32xx SoC-level power management.

Figure 15-3. Power Management Control Architecture in CC32xx

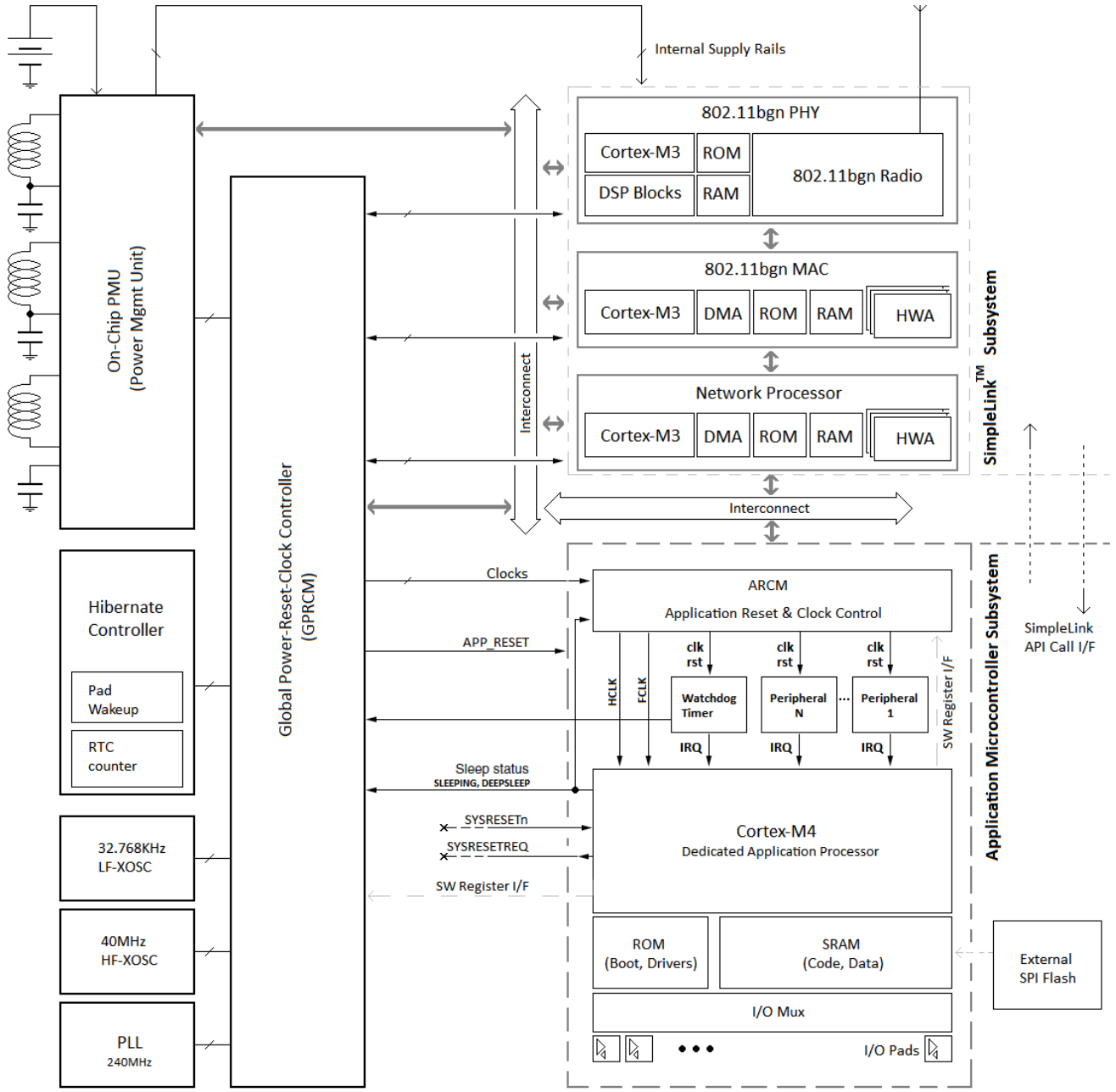

15.2.1 Global Power-Reset-Clock Manager (GPRCM)

The global power-reset-clock manager module (GPRCM) receives the sleep requests from the subsystems and the wake events from associated sources. Based on sleep requests and wake events, the GPRCM controls the clock sources, PLL, power switches, and the PMU to change or gate/un-gate the supply, clocks, and resets to the following subsystems:

- Application processor (APPS)
- Networking processor (NWP)
- WLAN MAC and PHY processors (WLAN)

Copyright © 2017, Texas Instruments Incorporated

Programmable system clock frequency (using PLL) is not supported in the CC32xx, due to co-existence reasons. For ease of programming and system robustness, application code has limited access to the chip power and clock management infrastructure in CC32xx. The software interface to power management is limited to a subset of GPRCM registers, which are accessed through a set of easy-to-use API functions described in Section 15.3.

15.2.2 Application Reset-Clock Manager (ARCM)

The application processor subsystem uses a local reset and clock control module called ARCM. The ARCM controls the reset, clock muxing, and clock gating to the application-specific peripheral modules. ARCM has no power control functionality. The application processor subsystem is a single power domain managed by GPRCM at the SoC level. Power-gating at an individual peripheral level does not lead to significant savings in a high-performance multi-processor system, and is not supported in the CC32xx.

The ARCM registers can be accessed either directly or through a set of easy-to-use API functions described in Section 15.3. The ARCM register map is described in Section 15.6.

15.3 PRCM APIs

This section gives an overview of the PRCM APIs provided in the CC32xx Software Development Kit peripheral library. For more details, refer to the SDK documentation.

15.3.1 MCU Initialization

Booting from power-off or exiting hibernate low power mode, the user application can configure the mandatory MCU parameters by calling void PRCMCC32xxMCUInit() API.

void **PRCMCC32xxMCUInit**(void)

Description: This function sets the mandatory configuration for the MCU.

Parameter: None

Return: None

15.3.2 Reset Control

MCU Reset (Software Reset)

The MCU subsystem can be reset to its default state using the following API function call.

void **PRCMMCUReset**(tBoolean bIncludeSubsystem)

Description: This function performs a software reset of the MCU and associated peripherals. The core resumes execution in the ROM bootloader, which reloads the user application from sFlash.

Parameter: bIncludeSubsystem – If true, the MCU and its associated peripherals are reset; if false, only the MCU is reset.

Return: None

15.3.3 Peripheral Reset

Individual peripherals can be reset to their default register state using the following API call.

void **PRCMPeripheralReset**(unsigned long ulPeripheral)

Description: This function performs a software reset of the specified peripheral.

Parameter: ulPeripheral – A valid peripheral macro (see Section 15.4)

Return: None

15.3.4 Reset Cause

The application processor restarts its execution from a reset vector after a reset. The application can determine the cause of the reset using the following API.

Copyright © 2017, Texas Instruments Incorporated

unsigned long **PRCMSysResetCauseGet**(void)

Description: This function acquires the reason for an MCU reset. This is a sticky status.

Parameter: None

Return: Returns the MCU reset cause as one of the following:

- **PRCM_POWER_ON**: Power-on reset
- **PRCM_LPDS_EXIT**: Exiting from LPDS
- **PRCM_CORE_RESET**: Software reset (core only)
- **PRCM_MCU_RESET**: Software reset (core and associated peripherals)
- **PRCM_WDT_RESET**: Watchdog reset
- **PRCM_SOC_RESET**: Software SOC reset
- **PRCM_HIB_EXIT**: Exiting from hibernate

15.3.5 Clock Control

Individual peripherals can be kept clock-gated or un-gated across different power modes. Any access to a clock-gated peripheral results in a bus fault. The following APIs can control the peripheral clock gating.

void **PRCMPeripheralClkEnable**(unsigned long ulPeripheral, unsigned long ulClkFlags)

Description: This function un-gates the specified peripheral clock and makes the peripheral accessible.

Parameters:

- **ulPeripheral**: One of the valid peripheral macros (see Section 15.4)
- **ulClkFlag**: Power mode during which the clock is kept enabled and is bitwise or one or more of the following:
  - **PRCM_RUN_MODE_CLK**: Un-gates clock to the peripheral during run mode.
  - **PRCM_SLP_MODE_CLK**: Keeps the clock un-gated during sleep.
  - **PRCM_DSLP_MODE_CLK**: Keeps the clock un-gated during deep sleep.

Return: None

void **PRCMPeripheralClkDisable**(unsigned long ulPeripheral, unsigned long ulClkFlags)

Description: This function gates a specified peripheral clock.

Parameter:

- **ulPeripheral**: One of the valid peripheral macros (see Section 15.4).
- **ulClkFlag**: Power mode during which the clock is kept disabled and is bitwise or one or more of the following:
  - **PRCM_RUN_MODE_CLK**: Gates clock to the peripheral during run mode.
  - **PRCM_SLP_MODE_CLK**: Keeps the clock gated during sleep.
  - **PRCM_DSLP_MODE_CLK**: Keeps the clock gated during deep sleep.

Return: None

15.3.6 Low Power Modes

SRAM Retention – The CC32xx SRAM is organized in 4 × 64-KB columns. By default, all SRAM columns are configured to be retained across LPDS and deep sleep power modes. The application can enable or disable retention per column by calling the following API with the appropriate parameters:

void **PRCMSRAMRetentionEnable**(unsigned long ulSramColSel, unsigned long ulFlags)

Description: This function reads from a specified OCR register.

Parameter:

- **ulSramColSel**: Bit-packed representation of SRAM columns. **ulSramColSel** is logical or one or more of the following:

Copyright © 2017, Texas Instruments Incorporated

  - **PRCM_SRAM_COL_1**: SRAM column 1
  - **PRCM_SRAM_COL_2**: SRAM column 2
  - **PRCM_SRAM_COL_3**: SRAM column 3
  - **PRCM_SRAM_COL_4**: SRAM column 4
- **ulFlags**: Bit-packed representation of power modes. **ulFlags** is logical or one or more of the following:
  - **PRCM_SRAM_DSLP_RET**: Configuration for DSLP
  - **PRCM_SRAM_LPDS_RET**: Configuration for LPDS

Return: None

void **PRCMSRAMRetentionDisable**(unsigned long ulSramColSel, unsigned long ulFlags)

Description: This function reads from a specified OCR register.

Parameter:

- **ulSramColSel**: Bit-packed representation of SRAM columns. **ulSramColSel** is logical or one or more of the following:
  - **PRCM_SRAM_COL_1**: SRAM column 1
  - **PRCM_SRAM_COL_2**: SRAM column 2
  - **PRCM_SRAM_COL_3**: SRAM column 3
  - **PRCM_SRAM_COL_4**: SRAM column 4
- **ulFlags**: Bit-packed representation of power modes. **ulFlags** is logical or one or more of the following:
  - **PRCM_SRAM_DSLP_RET**: Configuration for DSLP
  - **PRCM_SRAM_LPDS_RET**: Configuration for LPDS

Return: None

15.3.7 Sleep (SLEEP)

This mode can be entered by calling the following API. In this mode, the core is halted at the point of invocation on this API with selective peripheral clock gating. The core resumes execution from the same location when it receives an interrupt.

void **PRCMSleepEnter**()

Description: Enter sleep power mode by invoking a WFI instruction.

Parameter: None

Return: None

15.3.8 Deep Sleep (DEEPSLEEP)

In this mode, the core is halted at the point of invocation on this API, with selective peripheral clock gating and SRAM retention. The core resumes execution from the same location when it receives an interrupt. This mode can be entered by calling the following API.

void **PRCMDeepSleepEnter** ()

Description: Enter deep-sleep power mode by executing a WFI instruction.

Parameter: None

Return: None

By default, the entire SRAM is retained during DSLP. The user can enable or disable SRAM retention using the APIs **PRCMSRAMRetentionEnable**() and **PRCMSRAMRetentionDisable**(). See Section 15.3.6 for more details.

15.3.9 Low-Power Deep Sleep (LPDS)

In this mode, the MCU core and its associated peripheral are reset with selective SRAM column retention.

Copyright © 2017, Texas Instruments Incorporated

By default, the entire SRAM is retained during DSLP. The user can enable or disable SRAM retention using the APIs **PRCMSRAMRetentionEnable**() and P**RCMSRAMRetentionDisable**(). See Section 15.3.6 for more details.

Core resumes its execution either in the ROM bootloader or a pre-configured location in SRAM (if the user sets restore info before entering LPDS) upon wakeup, due to configured wake sources which includes the following:

- Host IRQ – An interrupt from NWP
- LPDS Timer – Dedicated LPDS timer
- LPDS wakeup GPIOs – Six selected GPIOs

LPDS restore info can be set using the following API:

void **PRCMLPDSRestoreInfoSet**(unsigned long ulStackPtr, unsigned long ulProgCntr)

Description: This function sets the PC and stack pointer info that will be restored by the bootloader on exit from LPDS.

Parameter:

- **ulStackPtr**: Stack pointer restored on exit from LPDS.
- **ulProgCntr**: Program counter restored on exit from LPDS.

Return: None

LPDS wakeup sources can be configured using following APIs:

● void **PRCMLPDSWakeupSourceEnable**(unsigned long ulLpdsWakeupSrc)

Description: This function enables the specified LPDS wake-up sources.

Parameter: **ulLpdsWakeupSrc**: Bit-packed representation of valid wake-up sources. **ulLpdsWakeupSrc** is bitwise or one or more of the following:

- **PRCM_LPDS_HOST_IRQ**: Interrupt from NWP
- **PRCM_LPDS_GPIO**: LPDS wake-up GPIOs
- **PRCM_LPDS_TIMER**: Dedicated LPDS timer

Return: None

● void **PRCMLPDSWakeupSourceDisable**(unsigned long ulLpdsWakeupSrc)

Description: This function disables the specified LPDS wake-up sources.

Parameter: **ulLpdsWakeupSrc**: Bit-packed representation of valid wake-up sources. **ulLpdsWakeupSrc** is bitwise or one or more of the following:

- **PRCM_LPDS_HOST_IRQ**: Interrupt from NWP
- **PRCM_LPDS_GPIO**: LPDS wake-up GPIOs
- **PRCM_LPDS_TIMER**: Dedicated LPDS timer

Return: None

● void **PRCMLPDSIntervalSet**(unsigned long ulTicks)

Description: This function sets the LPDS wake-up timer interval. The 32-bit timer is clocked at 32.768 KHz and triggers a wakeup on expiry. The timer is started only when the system enters LPDS

Parameter: **ulTicks**: Wake-up interval in 32.768-KHz ticks.

Return: None

● unsigned long **PRCMLPDSWakeupCauseGet**(void)

Description: This function gets the LPDS wake-up cause.

Parameter: None

Return: Returns the LPDS wake-up cause enumerated as one of the following:

- **PRCM_LPDS_HOST_IRQ**: Interrupt from NWP

Copyright © 2017, Texas Instruments Incorporated

- **PRCM_LPDS_GPIO**: LPDS wake-up GPIOs
- **PRCM_LPDS_TIMER**: Dedicated LPDS timer

● void **PRCMLPDSWakeUpGPIOSelect**(unsigned long ulGPIOPin, unsigned long ulType)

Description: Sets the specified GPIO as the wake-up source, and configures that GPIO to sense-specified.

Parameter:

- **ulGPIOPin**: One of the valid LPDS wake-up GPIOs. **ulGPIOPin** can be one of the following:
  - **PRCM_LPDS_GPIO2**: GPIO 2
  - **PRCM_LPDS_GPIO4**: GPIO 4
  - **PRCM_LPDS_GPIO13**: GPIO 13
  - **PRCM_LPDS_GPIO17**: GPIO 17
  - **PRCM_LPDS_GPIO11**: GPIO 11
  - **PRCM_LPDS_GPIO24**: GPIO 24
- **ulType**: Event Type. **ulType** can be one of the following:
  - **PRCM_LPDS_LOW_LEVEL**: GPIO is held low (0)
  - **PRCM_LPDS_HIGH_LEVEL**: GPIO is held high (1)
  - **PRCM_LPDS_FALL_EDGE**: GPIO changes from high to low
  - **PRCM_LPDS_RISE_EDGE**: GPIO changes from low to high

Return: None

● The user application can put the system in LPDS by invoking following the API function:

void **PRCMLPDSEnter**(void)

Description: This function puts the system into low-power deep-sleep (LPDS) power mode, and should be invoked after configuring the wake source, SRAM retention configuration, and system restore configuration.

Parameter: None

Return: None

15.3.10 Hibernate (HIB)

In this mode, the entire SOC loses its state, including the MCU subsystem, the NWP subsystem, and SRAM except 2 × 32-bit OCR registers and the free-running slow-clock counter. Core resumes its execution in the ROM bootloader upon wakeup due to configured wake sources, which include the following:

- Slow clock counter – Always-on 32.768-KHz counter
- HIB wakeup GPIOs – Six selected GPIOs

Hibernate wake-up sources are configured using following APIs:

● void **PRCMHibernateWakeupSourceEnable**(unsigned long ulHIBWakupSrc)

Description: This function enables the specified HIB wake-up sources.

Parameter: **ulHIBWakupSrc**: Bit-packed representation of valid wake-up sources. **ulHIBWakupSrc** is bitwise or one or more of the following:

- **PRCM_HIB_SLOW_CLK_CTR**: Slow clock counter
- **PRCM_HIB_GPIO2**: GPIO 2
- **PRCM_HIB_GPIO4**: GPIO 4
- **PRCM_HIB_GPIO13**: GPIO 13
- **PRCM_HIB_GPIO17**: GPIO 17
- **PRCM_HIB_GPIO11**: GPIO 11

Copyright © 2017, Texas Instruments Incorporated

- **PRCM_HIB_GPIO24**: GPIO 24

Return: None

● void **PRCMHibernateWakeupSourceDisable**(unsigned long ulHIBWakupSrc)

Description: This function disables the specified HIB wake-up sources.

Parameter: **ulHIBWakupSrc**: Bit-packed representation of valid wake-up sources. **ulHIBWakupSrc** is bitwise or one or more of the following:

- **PRCM_HIB_SLOW_CLK_CTR**: Slow clock counter
- **PRCM_HIB_GPIO2**: GPIO 2
- **PRCM_HIB_GPIO4**: GPIO 4
- **PRCM_HIB_GPIO13**: GPIO 13
- **PRCM_HIB_GPIO17**: GPIO 17
- **PRCM_HIB_GPIO11**: GPIO 11
- **PRCM_HIB_GPIO24**: GPIO 24

Return: None

● unsigned long **PRCMHibernateWakeupCauseGet**(void)

Description: This function gets the HIB wake-up cause.

Parameter: None

Return: Returns the HIB wake-up cause enumerated as one of the following:

- **PRCM_HIB_WAKEUP_CAUSE_SLOW_CLOCK**: Slow clock counter
- **PRCM_HIB_WAKEUP_CAUSE_GPIO**: HIB wake-up GPIOs

● void **PRCMHibernateWakeUpGPIOSelect**(unsigned long ulMultiGPIOBitMap, unsigned long ulType)

Description: Sets the specified GPIOs as wake-up source and configures them to sense the specified event.

Parameter:

- **ulMultiGPIOBitMap**: One of the valid HIB wake-up GPIOs. ulMultiGPIOBitMap is logical OR of one or more of the following:
  - **PRCM_LPDS_GPIO2**: GPIO 2
  - **PRCM_LPDS_GPIO4**: GPIO 4
  - **PRCM_LPDS_GPIO13**: GPIO 13
  - **PRCM_LPDS_GPIO17**: GPIO 17
  - **PRCM_LPDS_GPIO11**: GPIO 11
  - **PRCM_LPDS_GPIO24**: GPIO 24
- **ulType**: Event Type. **ulType** can be one of the following:
  - **PRCM_HIB_LOW_LEVEL**: GPIO is held low (0)
  - **PRCM_HIB_HIGH_LEVEL**: GPIO is held high (1)
  - **PRCM_HIB_FALL_EDGE**: GPIO changes from High to Low
  - **PRCM_HIB_RISE_EDGE**: GPIO changes from Low to High

Return: None

● void **PRCMHibernateIntervalSet**(unsigned long long ullTicks)

Description: This function sets the HIB wake-up interval based on the current slow clock count. The 48-bit timer is clocked at 32.768 KHz and triggers a wakeup when the counter reaches a particular value. The function computes the wake-up count value by adding a specified interval to the current value of the slow clock counter.

Parameter: **ullTicks**: Wake-up interval in 32.768-KHz ticks

Copyright © 2017, Texas Instruments Incorporated

Return: None

● The application can put the system in HIB by invoking the following API:

void **PRCMHibernateEnter** (void)

Description: This function puts the system into hibernate power mode.

Parameter: None

Return: None

Two 32-bit on-chip retention registers (OCR) retained during the hibernate power mode can be accessed using the following APIs:

● void **PRCMOCRRegisterWrite**(unsigned char ucIndex, unsigned long ulRegValue)

Description: This function writes into a specified OCR register.

Parameter:

- **ucIndex**: Selects one out of two available registers, 0 or 1
- **ulRegValue**: 32-bit value

Return: None

● unsigned long **PRCMOCRRegisterRead**(unsigned char ucIndex)

Description: This function reads from a specified OCR register.

Parameter: **ucIndex**: Selects one out of two available registers, 0 or 1

Return: Returns a 32-bit value read from a specified OCR register.

15.3.11 Slow Clock Counter

The CC32xx has a 48-bit on-chip always-on slow counter running at 32.768 KHz, which can wake up the device from hibernate low-power mode, or generate an interrupt to the core on counting a particular match value. The following API returns the current value of the counter:

unsigned long **PRCMSlowClkCtrGet**(void)

Description: This function reads from a specified OCR register.

Parameter: None

Return: None

To set the match value to receive an interrupt call, use the following API with the appropriate value:

void **PRCMSlowClkCtrMatchSet**(unsigned long long ullTicks)

Description: This function sets the match value of the slow clock triggered interrupt.

Parameter: ullTicks 48-bit match value

Return: None

15.4 Peripheral Macros

Table 15-2. Peripheral Macro Table

Macro	Description
PRCM_CAMERA	Camera interface
PRCM_I2S	I2S interface
PRCM_SDHOST	SDHost interface
PRCM_GSPI	General purpose SPI interface
PRCM_UDMA	uDMA module
PRCM_GPIOA0	General Purpose IO port A0

Copyright © 2017, Texas Instruments Incorporated

Table 15-2. Peripheral Macro Table (continued)

Macro	Description
PRCM_GPIOA1	General Purpose IO port A1
PRCM_GPIOA2	General Purpose IO port A2
PRCM_GPIOA3	General Purpose IO port A3
PRCM_WDT	Watchdog module
PRCM_UARTA0	UART interface A0
PRCM_UARTA1	UART interface A1
PRCM_TIMERA0	PRCM_TIMERA0 General purpose Timer A0
PRCM_TIMERA1	PRCM_TIMERA0 General purpose Timer A1
PRCM_TIMERA2	PRCM_TIMERA0 General purpose Timer A2
PRCM_TIMERA3	PRCM_TIMERA0 General purpose Timer A3
PRCM_I2CA0	I2C interface

15.5 Power Management Framework

The CC32xx SDK comes with a power management software framework. This framework provides simple services that can be invoked by the application, and callback functions that can be overridden by the application code. For details refer to the Power Management framework software documentation.

Copyright © 2017, Texas Instruments Incorporated

15.6 PRCM Registers

Table 15-3 lists the memory-mapped registers for the ARCM. All register offset addresses not listed in Table 15-3 should be considered as reserved locations, and the register contents should not be modified.

Table 15-3. PRCM Registers

Offset	Acronym	Register Name	Section
0h	CAMCLKCFG		Section 15.6.1
4h	CAMCLKEN		Section 15.6.2
8h	CAMSWRST		Section 15.6.3
14h	MCASPCLKEN		Section 15.6.4
18h	MCASPSWRST		Section 15.6.5
20h	SDIOMCLKCFG		Section 15.6.6
24h	SDIOMCLKEN		Section 15.6.7
28h	SDIOMSWRST		Section 15.6.8
2Ch	APSPICLKCFG		Section 15.6.9
30h	APSPICLKEN		Section 15.6.10
34h	APSPISWRST		Section 15.6.11
48h	DMACLKEN		Section 15.6.12
4Ch	DMASWRST		Section 15.6.13
50h	GPIO0CLKEN		Section 15.6.14
54h	GPIO0SWRST		Section 15.6.15
58h	GPIO1CLKEN		Section 15.6.16
5Ch	GPIO1SWRST		Section 15.6.17
60h	GPIO2CLKEN		Section 15.6.18
64h	GPIO2SWRST		Section 15.6.19
68h	GPIO3CLKEN		Section 15.6.20
6Ch	GPIO3SWRST		Section 15.6.21
70h	GPIO4CLKEN		Section 15.6.22
74h	GPIO4SWRST		Section 15.6.23
78h	WDTCLKEN		Section 15.6.24
7Ch	WDTSWRST		Section 15.6.25
80h	UART0CLKEN		Section 15.6.26
84h	UART0SWRST		Section 15.6.27
88h	UART1CLKEN		Section 15.6.28
8Ch	UART1SWRST		Section 15.6.29
90h	GPT0CLKCFG		Section 15.6.30
94h	GPT0SWRST		Section 15.6.31
98h	GPT1CLKEN		Section 15.6.32
9Ch	GPT1SWRST		Section 15.6.33
A0h	GPT2CLKEN		Section 15.6.34
A4h	GPT2SWRST		Section 15.6.35
A8h	GPT3CLKEN		Section 15.6.36
ACh	GPT3SWRST		Section 15.6.37
B0h	MCASPCLKCFG0		Section 15.6.38
B4h	MCASPCLKCFG1		Section 15.6.39
D8h	I2CLCKEN		Section 15.6.40
DCh	I2CSWRST		Section 15.6.41
E4h	LPDSREQ		Section 15.6.42
ECh	TURBOREQ		Section 15.6.43
108h	DSLPWAKECFG		Section 15.6.44

Copyright © 2017, Texas Instruments Incorporated

Table 15-3. PRCM Registers (continued)

Offset	Acronym	Register Name	Section
10Ch	DSLPTIMRCFG		Section 15.6.45
110h	SLPWAKEEN		Section 15.6.46
114h	SLPTMRCFG		Section 15.6.47
118h	WAKENWP		Section 15.6.48
120h	RCM_IS		Section 15.6.49
124h	RCM_IEN		Section 15.6.50

Copyright © 2017, Texas Instruments Incorporated

15.6.1 CAMCLKCFG Register (offset = 0h) [reset = 0h]

CAMCLKCFG is shown in Figure 15-4 and described in Table 15-4.

Figure 15-4. CAMCLKCFG Register

31	30	29	28	27	26	25	24	23	22	21	20	19	18	17	16
RESERVED															
R-0h															
15	14	13	12	11	10	9	8	7	6	5	4	3	2	1	0
RESERVED					DIVOFFTIM			NU1					DIVONTIM		
R-0h					R/W-0h			R-0h					R/W-0h		

Table 15-4. CAMCLKCFG Register Field Descriptions

Bit	Field	Type	Reset	Description
31-11	RESERVED	R	0h	
10-8	DIVOFFTIM	R/W	0h	CAMERA_PLLCKDIV_OFF_TIME Configuration of OFF-TIME for dividing PLL clk (240 MHz) in generation of Camera func-clk: 000h = 1 001h = 2 010h = 3 011h = 4 100h = 5 101h = 6 110h = 7 111h = 8
7-3	NU1	R	0h	
2-0	DIVONTIM	R/W	0h	CAMERA_PLLCKDIV_ON_TIME Configuration of ON-TIME for dividing PLL clk (240 MHz) in generation of Camera func-clk: 000h = 1 001h = 2 010h = 3 011h = 4 100h = 5 101h = 6 110h = 7 111h = 8

Copyright © 2017, Texas Instruments Incorporated

15.6.2 CAMCLKEN Register (offset = 4h) [reset = 0h]

CAMCLKEN is shown in Figure 15-5 and described in Table 15-5.

Figure 15-5. CAMCLKEN Register

31	30	29	28	27	26	25	24
RESERVED							
R-0h							
23	22	21	20	19	18	17	16
NU1							DSLPCLKEN
R-0h							R-0h
15	14	13	12	11	10	9	8
NU2							SLPCLKEN
R-0h							R/W-0h
7	6	5	4	3	2	1	0
NU3							RUNCLKEN
R-0h							R/W-0h

Table 15-5. CAMCLKEN Register Field Descriptions

Bit	Field	Type	Reset	Description
31-24	RESERVED	R	0h	
23-17	NU1	R	0h	
16	DSLPCLKEN	R	0h	CAMERA_DSLP_CLK_ENABLE 0h = Disable camera clk during deep-sleep mode
15-9	NU2	R	0h	
8	SLPCLKEN	R/W	0h	CAMERA_SLP_CLK_ENABLE 0h = Disable camera clk during sleep mode 1h = Enable camera clk during sleep mode
7-1	NU3	R	0h	
0	RUNCLKEN	R/W	0h	CAMERA_RUN_CLK_ENABLE 0h = Disable camera clk during run mode 1h = Enable camera clk during run mode

Copyright © 2017, Texas Instruments Incorporated

15.6.3 CAMSWRST Register (offset = 8h) [reset = 0h]

CAMSWRST is shown in Figure 15-6 and described in Table 15-6.

Figure 15-6. CAMSWRST Register

31	30	29	28	27	26	25	24
RESERVED							
R-0h							
23	22	21	20	19	18	17	16
RESERVED							
R-0h							
15	14	13	12	11	10	9	8
RESERVED							
R-0h							
7	6	5	4	3	2	1	0
RESERVED						ENSTS	SWRST
R-0h						R-0h	R/W-0h

Table 15-6. CAMSWRST Register Field Descriptions

Bit	Field	Type	Reset	Description
31-2	RESERVED	R	0h	
1	ENSTS	R	0h	CAMERA_ENABLED_STATUS 0h = Camera clocks/resets are disabled 1h = Camera clocks/resets are enabled
0	SWRST	R/W	0h	CAMERA_SOFT_RESET 0h = De-assert reset for Camera-core 1h = Assert reset for Camera-core

Copyright © 2017, Texas Instruments Incorporated

15.6.4 MCASPCLKEN Register (offset = 14h) [reset = 0h]

MCASPCLKEN is shown in Figure 15-7 and described in Table 15-7.

Figure 15-7. MCASPCLKEN Register

31	30	29	28	27	26	25	24
RESERVED							
R-0h							
23	22	21	20	19	18	17	16
NU1							DSLPCLKEN
R-0h							R-0h
15	14	13	12	11	10	9	8
NU2							SLPCLKEN
R-0h							R/W-0h
7	6	5	4	3	2	1	0
NU3							RUNCLKEN
R-0h							R/W-0h

Table 15-7. MCASPCLKEN Register Field Descriptions

Bit	Field	Type	Reset	Description
31-24	RESERVED	R	0h	
23-17	NU1	R	0h	
16	DSLPCLKEN	R	0h	MCASP_DSLP_CLK_ENABLE 0h = Disable MCASP clk during deep-sleep mode
15-9	NU2	R	0h	
8	SLPCLKEN	R/W	0h	MCASP_SLP_CLK_ENABLE 0h = Disable MCASP clk during sleep mode 1h = Enable MCASP clk during sleep mode
7-1	NU3	R	0h	
0	RUNCLKEN	R/W	0h	MCASP_RUN_CLK_ENABLE 0h = Disable MCASP clk during run mode 1h = Enable MCASP clk during run mode

Copyright © 2017, Texas Instruments Incorporated

15.6.5 MCASPSWRST Register (offset = 18h) [reset = 0h]

MCASPSWRST is shown in Figure 15-8 and described in Table 15-8.

Figure 15-8. MCASPSWRST Register

31	30	29	28	27	26	25	24
RESERVED							
R-0h							
23	22	21	20	19	18	17	16
RESERVED							
R-0h							
15	14	13	12	11	10	9	8
RESERVED							
R-0h							
7	6	5	4	3	2	1	0
RESERVED						ENSTS	SWRST
R-0h						R-0h	R/W-0h

Table 15-8. MCASPSWRST Register Field Descriptions

Bit	Field	Type	Reset	Description
31-2	RESERVED	R	0h	
1	ENSTS	R	0h	MCASP_ENABLED_STATUS 0h = MCASP Clocks/resets are disabled 1h = MCASP Clocks/resets are enabled
0	SWRST	R/W	0h	MCASP_SOFT_RESET 0h = De-assert reset for MCASP-core 1h = Assert reset for MCASP-core

Copyright © 2017, Texas Instruments Incorporated

15.6.6 SDIOMCLKCFG Register (offset = 20h) [reset = 0h]

SDIOMCLKCFG is shown in Figure 15-9 and described in Table 15-9.

Figure 15-9. SDIOMCLKCFG Register

31	30	29	28	27	26	25	24	23	22	21	20	19	18	17	16
RESERVED															
R-0h															
15	14	13	12	11	10	9	8	7	6	5	4	3	2	1	0
RESERVED					DIVOFFTIM			NU1					DIVONTIM		
R-0h					R/W-0h			R-0h					R/W-0h		

Table 15-9. SDIOMCLKCFG Register Field Descriptions

Bit	Field	Type	Reset	Description
31-11	RESERVED	R	0h	
10-8	DIVOFFTIM	R/W	0h	MMCHS_PLLCKDIV_OFF_TIME Configuration of OFF-TIME for dividing PLL clk (240 MHz) in generation of MMCHS func-clk: 000h = 1 001h = 2 010h = 3 011h = 4 100h = 5 101h = 6 110h = 7 111h = 8
7-3	NU1	R	0h	
2-0	DIVONTIM	R/W	0h	MMCHS_PLLCKDIV_ON_TIME Configuration of ON-TIME for dividing PLL clk (240 MHz) in generation of MMCHS func-clk: 000h = 1 001h = 2 010h = 3 011h = 4 100h = 5 101h = 6 110h = 7 111h = 8

Copyright © 2017, Texas Instruments Incorporated

15.6.7 SDIOMCLKEN Register (offset = 24h) [reset = 0h]

SDIOMCLKEN is shown in Figure 15-10 and described in Table 15-10.

Figure 15-10. SDIOMCLKEN Register

31	30	29	28	27	26	25	24
RESERVED							
R-0h							
23	22	21	20	19	18	17	16
NU1							DSLPCLKEN
R-0h							R-0h
15	14	13	12	11	10	9	8
NU2							SLPCLKEN
R-0h							R/W-0h
7	6	5	4	3	2	1	0
NU3							RUNCLKEN
R-0h							R/W-0h

Table 15-10. SDIOMCLKEN Register Field Descriptions

Bit	Field	Type	Reset	Description
31-24	RESERVED	R	0h	
23-17	NU1	R	0h	
16	DSLPCLKEN	R	0h	MMCHS_DSLP_CLK_ENABLE 0h = Disable MMCHS clk during deep-sleep mode
15-9	NU2	R	0h	
8	SLPCLKEN	R/W	0h	MMCHS_SLP_CLK_ENABLE 0h = Disable MMCHS clk during sleep mode 1h = Enable MMCHS clk during sleep mode
7-1	NU3	R	0h	
0	RUNCLKEN	R/W	0h	MMCHS_RUN_CLK_ENABLE 0h = Disable MMCHS clk during run mode 1h = Enable MMCHS clk during run mode

Copyright © 2017, Texas Instruments Incorporated

15.6.8 SDIOMSWRST Register (offset = 28h) [reset = 0h]

SDIOMSWRST is shown in Figure 15-11 and described in Table 15-11.

Figure 15-11. SDIOMSWRST Register

31	30	29	28	27	26	25	24
RESERVED							
R-0h							
23	22	21	20	19	18	17	16
RESERVED							
R-0h							
15	14	13	12	11	10	9	8
RESERVED							
R-0h							
7	6	5	4	3	2	1	0
RESERVED						ENSTS	SWRST
R-0h						R-0h	R/W-0h

Table 15-11. SDIOMSWRST Register Field Descriptions

Bit	Field	Type	Reset	Description
31-2	RESERVED	R	0h	
1	ENSTS	R	0h	MMCHS_ENABLED_STATUS 0h = MMCHS Clocks and resets are disabled 1h = MMCHS Clocks and resets are enabled
0	SWRST	R/W	0h	MMCHS_SOFT_RESET 0h = De-assert reset for MMCHS-core 1h = Assert reset for MMCHS-core

Copyright © 2017, Texas Instruments Incorporated

15.6.9 APSPICLKCFG Register (offset = 2Ch) [reset = 0h]

APSPICLKCFG is shown in Figure 15-12 and described in Table 15-12.

Figure 15-12. APSPICLKCFG Register

31	30	29	28	27	26	25	24
RESERVED							
R-0h							
23	22	21	20	19	18	17	16
RESERVED							BAUDSEL
R-0h							R/W-0h
15	14	13	12	11	10	9	8
NU1					DIVOFFTIM		
R-0h					R/W-0h		
7	6	5	4	3	2	1	0
NU2					DIVONTIM		
R-0h					R/W-0h		

Table 15-12. APSPICLKCFG Register Field Descriptions

Bit	Field	Type	Reset	Description
31-17	RESERVED	R	0h	
16	BAUDSEL	R/W	0h	MCSPI_A1_BAUD_CLK_SEL 0h = XTAL clk is used as baud clk for MCSPI_A1 1h = PLL divclk is used as baud clk for MCSPI_A1.
15-11	NU1	R	0h	
10-8	DIVOFFTIM	R/W	0h	MCSPI_A1_PLLCLKDIV_OFF_TIME Configuration of OFF-TIME for dividing PLL clk (240 MHz) in generation of MCSPI_A1 func-clk: 000h = 1 001h = 2 010h = 3 011h = 4 100h = 5 101h = 6 110h = 7 111h = 8
7-3	NU2	R	0h	
2-0	DIVONTIM	R/W	0h	MCSPI_A1_PLLCLKDIV_ON_TIME Configuration of ON-TIME for dividing PLL clk (240 MHz) in generation of MCSPI_A1 func-clk: 000h = 1 001h = 2 010h = 3 011h = 4 100h = 5 101h = 6 110h = 7 111h = 8

Copyright © 2017, Texas Instruments Incorporated

15.6.10 APSPICLKEN Register (offset = 30h) [reset = 0h]

APSPICLKEN is shown in Figure 15-13 and described in Table 15-13.

Figure 15-13. APSPICLKEN Register

31	30	29	28	27	26	25	24
RESERVED							
R-0h							
23	22	21	20	19	18	17	16
NU1							DSLPCLKEN
R-0h							R-0h
15	14	13	12	11	10	9	8
NU2							SLPCLKEN
R-0h							R/W-0h
7	6	5	4	3	2	1	0
NU3							RUNCLKEN
R-0h							R/W-0h

Table 15-13. APSPICLKEN Register Field Descriptions

Bit	Field	Type	Reset	Description
31-24	RESERVED	R	0h	
23-17	NU1	R	0h	
16	DSLPCLKEN	R	0h	MCSPI_A1_DSLP_CLK_ENABLE 0h = Disable MCSPI_A1 clk during deep-sleep mode
15-9	NU2	R	0h	
8	SLPCLKEN	R/W	0h	MCSPI_A1_SLP_CLK_ENABLE 0h = Disable MCSPI_A1 clk during sleep mode 1h = Enable MCSPI_A1 clk during sleep mode
7-1	NU3	R	0h	
0	RUNCLKEN	R/W	0h	MCSPI_A1_RUN_CLK_ENABLE 0h = Disable MCSPI_A1 clk during run mode 1h = Enable MCSPI_A1 clk during run mode

Copyright © 2017, Texas Instruments Incorporated

15.6.11 APSPISWRST Register (offset = 34h) [reset = 0h]

APSPISWRST is shown in Figure 15-14 and described in Table 15-14.

Figure 15-14. APSPISWRST Register

31	30	29	28	27	26	25	24
RESERVED							
R-0h							
23	22	21	20	19	18	17	16
RESERVED							
R-0h							
15	14	13	12	11	10	9	8
RESERVED							
R-0h							
7	6	5	4	3	2	1	0
RESERVED						ENSTS	SWRST
R-0h						R-0h	R/W-0h

Table 15-14. APSPISWRST Register Field Descriptions

Bit	Field	Type	Reset	Description
31-2	RESERVED	R	0h	
1	ENSTS	R	0h	MCSPI_A1_ENABLED_STATUS 0h = MCSPI_A1 Clocks and resets are disabled 1h = MCSPI_A1 Clocks and resets are enabled
0	SWRST	R/W	0h	MCSPI_A1_SOFT_RESET 0h = De-assert reset for MCSPI_A1-core 1h = Assert reset for MCSPI_A1-core

Copyright © 2017, Texas Instruments Incorporated

15.6.12 DMACLKEN Register (offset = 48h) [reset = 0h]

DMACLKEN is shown in Figure 15-15 and described in Table 15-15.

Figure 15-15. DMACLKEN Register

31	30	29	28	27	26	25	24
RESERVED							
R-0h							
23	22	21	20	19	18	17	16
RESERVED							DSLPCLKEN
R-0h							R/W-0h
15	14	13	12	11	10	9	8
NU1							SLPCLKEN
R-0h							R/W-0h
7	6	5	4	3	2	1	0
NU2							RUNCLKEN
R-0h							R/W-0h

Table 15-15. DMACLKEN Register Field Descriptions

Bit	Field	Type	Reset	Description
31-17	RESERVED	R	0h	
16	DSLPCLKEN	R/W	0h	UDMA_A_DSLP_CLK_ENABLE 0h = Disable UDMA_A clk during deep-sleep mode 1h = Enable UDMA_A clk during deep-sleep mode
15-9	NU1	R	0h	
8	SLPCLKEN	R/W	0h	UDMA_A_SLP_CLK_ENABLE 0h = Disable UDMA_A clk during sleep mode 1h = Enable UDMA_A clk during sleep mode
7-1	NU2	R	0h	
0	RUNCLKEN	R/W	0h	UDMA_A_RUN_CLK_ENABLE 0h = Disable UDMA_A clk during run mode 1h = Enable UDMA_A clk during run mode

Copyright © 2017, Texas Instruments Incorporated

15.6.13 DMASWRST Register (offset = 4Ch) [reset = 0h]

DMASWRST is shown in Figure 15-16 and described in Table 15-16.

Figure 15-16. DMASWRST Register

31	30	29	28	27	26	25	24
RESERVED							
R-0h							
23	22	21	20	19	18	17	16
RESERVED							
R-0h							
15	14	13	12	11	10	9	8
RESERVED							
R-0h							
7	6	5	4	3	2	1	0
RESERVED						ENSTS	SWRST
R-0h						R-0h	R/W-0h

Table 15-16. DMASWRST Register Field Descriptions

Bit	Field	Type	Reset	Description
31-2	RESERVED	R	0h	
1	ENSTS	R	0h	UDMA_A_ENABLED_STATUS 0h = UDMA_A Clocks and resets are disabled 1h = UDMA_A Clocks and resets are enabled
0	SWRST	R/W	0h	UDMA_A_SOFT_RESET 0h = De-assert reset for DMA_A 1h = Assert reset for DMA_A

Copyright © 2017, Texas Instruments Incorporated

15.6.14 GPIO0CLKEN Register (offset = 50h) [reset = 0h]

GPIO0CLKEN is shown in Figure 15-17 and described in Table 15-17.

Figure 15-17. GPIO0CLKEN Register

31	30	29	28	27	26	25	24
RESERVED							
R-0h							
23	22	21	20	19	18	17	16
RESERVED							DSLPCLKEN
R-0h							R/W-0h
15	14	13	12	11	10	9	8
NU1							SLPCLKEN
R-0h							R/W-0h
7	6	5	4	3	2	1	0
NU2							RUNCLKEN
R-0h							R/W-0h

Table 15-17. GPIO0CLKEN Register Field Descriptions

Bit	Field	Type	Reset	Description
31-17	RESERVED	R	0h	
16	DSLPCLKEN	R/W	0h	GPIO_A_DSLP_CLK_ENABLE 0h = Disable GPIO_A clk during deep-sleep mode 1h = Enable GPIO_A clk during deep-sleep mode
15-9	NU1	R	0h	
8	SLPCLKEN	R/W	0h	GPIO_A_SLP_CLK_ENABLE 0h = Disable GPIO_A clk during sleep mode 1h = Enable GPIO_A clk during sleep mode
7-1	NU2	R	0h	
0	RUNCLKEN	R/W	0h	GPIO_A_RUN_CLK_ENABLE 0h = Disable GPIO_A clk during run mode 1h = Enable GPIO_A clk during run mode

Copyright © 2017, Texas Instruments Incorporated

15.6.15 GPIO0SWRST Register (offset = 54h) [reset = 0h]

GPIO0SWRST is shown in Figure 15-18 and described in Table 15-18.

Figure 15-18. GPIO0SWRST Register

31	30	29	28	27	26	25	24
RESERVED							
R-0h							
23	22	21	20	19	18	17	16
RESERVED							
R-0h							
15	14	13	12	11	10	9	8
RESERVED							
R-0h							
7	6	5	4	3	2	1	0
RESERVED						ENSTS	SWRST
R-0h						R-0h	R/W-0h

Table 15-18. GPIO0SWRST Register Field Descriptions

Bit	Field	Type	Reset	Description
31-2	RESERVED	R	0h	
1	ENSTS	R	0h	GPIO_A_ENABLED_STATUS 0h = GPIO_A Clocks and resets are disabled 1h = GPIO_A Clocks and resets are enabled
0	SWRST	R/W	0h	GPIO_A_SOFT_RESET 0h = De-assert reset for GPIO_A 1h = Assert reset for GPIO_A

Copyright © 2017, Texas Instruments Incorporated

15.6.16 GPIO1CLKEN Register (offset = 58h) [reset = 0h]

GPIO1CLKEN is shown in Figure 15-19 and described in Table 15-19.

Figure 15-19. GPIO1CLKEN Register

31	30	29	28	27	26	25	24
RESERVED							
R-0h							
23	22	21	20	19	18	17	16
RESERVED							DSLPCLKEN
R-0h							R/W-0h
15	14	13	12	11	10	9	8
NU1							SLPCLKEN
R-0h							R/W-0h
7	6	5	4	3	2	1	0
NU2							RUNCLKEN
R-0h							R/W-0h

Table 15-19. GPIO1CLKEN Register Field Descriptions

Bit	Field	Type	Reset	Description
31-17	RESERVED	R	0h	
16	DSLPCLKEN	R/W	0h	GPIO_B_DSLP_CLK_ENABLE 0h = Disable GPIO_B clk during deep-sleep mode 1h = Enable GPIO_B clk during deep-sleep mode
15-9	NU1	R	0h	
8	SLPCLKEN	R/W	0h	GPIO_B_SLP_CLK_ENABLE 0h = Disable GPIO_B clk during sleep mode 1h = Enable GPIO_B clk during sleep mode
7-1	NU2	R	0h	
0	RUNCLKEN	R/W	0h	GPIO_B_RUN_CLK_ENABLE 0h = Disable GPIO_B clk during run mode 1h = Enable GPIO_B clk during run mode

Copyright © 2017, Texas Instruments Incorporated

15.6.17 GPIO1SWRST Register (offset = 5Ch) [reset = 0h]

GPIO1SWRST is shown in Figure 15-20 and described in Table 15-20.

Figure 15-20. GPIO1SWRST Register

31	30	29	28	27	26	25	24
RESERVED							
R-0h							
23	22	21	20	19	18	17	16
RESERVED							
R-0h							
15	14	13	12	11	10	9	8
RESERVED							
R-0h							
7	6	5	4	3	2	1	0
RESERVED						ENSTS	SWRST
R-0h						R-0h	R/W-0h

Table 15-20. GPIO1SWRST Register Field Descriptions

Bit	Field	Type	Reset	Description
31-2	RESERVED	R	0h	
1	ENSTS	R	0h	GPIO_B_ENABLED_STATUS 0h = GPIO_B Clocks and resets are disabled 1h = GPIO_B Clocks and resets are enabled
0	SWRST	R/W	0h	GPIO_B_SOFT_RESET 0h = De-assert reset for GPIO_B 1h = Assert reset for GPIO_B

Copyright © 2017, Texas Instruments Incorporated

15.6.18 GPIO2CLKEN Register (offset = 60h) [reset = 0h]

GPIO2CLKEN is shown in Figure 15-21 and described in Table 15-21.

Figure 15-21. GPIO2CLKEN Register

31	30	29	28	27	26	25	24
RESERVED							
R-0h							
23	22	21	20	19	18	17	16
RESERVED							DSLPCLKEN
R-0h							R/W-0h
15	14	13	12	11	10	9	8
NU1							SLPCLKEN
R-0h							R/W-0h
7	6	5	4	3	2	1	0
NU2							RUNCLKEN
R-0h							R/W-0h

Table 15-21. GPIO2CLKEN Register Field Descriptions

Bit	Field	Type	Reset	Description
31-17	RESERVED	R	0h	
16	DSLPCLKEN	R/W	0h	GPIO_C_DSLP_CLK_ENABLE 0h = Disable GPIO_C clk during deep-sleep mode 1h = Enable GPIO_C clk during deep-sleep mode
15-9	NU1	R	0h	
8	SLPCLKEN	R/W	0h	GPIO_C_SLP_CLK_ENABLE 0h = Disable GPIO_C clk during sleep mode 1h = Enable GPIO_C clk during sleep mode
7-1	NU2	R	0h	
0	RUNCLKEN	R/W	0h	GPIO_C_RUN_CLK_ENABLE 0h = Disable GPIO_C clk during run mode 1h = Enable GPIO_C clk during run mode

Copyright © 2017, Texas Instruments Incorporated

15.6.19 GPIO2SWRST Register (offset = 64h) [reset = 0h]

GPIO2SWRST is shown in Figure 15-22 and described in Table 15-22.

Figure 15-22. GPIO2SWRST Register

31	30	29	28	27	26	25	24
RESERVED							
R-0h							
23	22	21	20	19	18	17	16
RESERVED							
R-0h							
15	14	13	12	11	10	9	8
RESERVED							
R-0h							
7	6	5	4	3	2	1	0
RESERVED						ENSTS	SWRST
R-0h						R-0h	R/W-0h

Table 15-22. GPIO2SWRST Register Field Descriptions

Bit	Field	Type	Reset	Description
31-2	RESERVED	R	0h	
1	ENSTS	R	0h	GPIO_C_ENABLED_STATUS 0h = GPIO_C Clocks and resets are disabled 1h = GPIO_C Clocks and resets are enabled
0	SWRST	R/W	0h	GPIO_C_SOFT_RESET 0h = De-assert reset for GPIO_C 1h = Assert reset for GPIO_C

Copyright © 2017, Texas Instruments Incorporated

15.6.20 GPIO3CLKEN Register (offset = 68h) [reset = 0h]

GPIO3CLKEN is shown in Figure 15-23 and described in Table 15-23.

Figure 15-23. GPIO3CLKEN Register

31	30	29	28	27	26	25	24
RESERVED							
R-0h							
23	22	21	20	19	18	17	16
RESERVED							DSLPCLKEN
R-0h							R/W-0h
15	14	13	12	11	10	9	8
NU1							SLPCLKEN
R-0h							R/W-0h
7	6	5	4	3	2	1	0
NU2							RUNCLKEN
R-0h							R/W-0h

Table 15-23. GPIO3CLKEN Register Field Descriptions

Bit	Field	Type	Reset	Description
31-17	RESERVED	R	0h	
16	DSLPCLKEN	R/W	0h	GPIO_D_DSLP_CLK_ENABLE 0h = Disable GPIO_D clk during deep-sleep mode 1h = Enable GPIO_D clk during deep-sleep mode
15-9	NU1	R	0h	
8	SLPCLKEN	R/W	0h	GPIO_D_SLP_CLK_ENABLE 0h = Disable GPIO_D clk during sleep mode 1h = Enable GPIO_D clk during sleep mode
7-1	NU2	R	0h	
0	RUNCLKEN	R/W	0h	GPIO_D_RUN_CLK_ENABLE 0h = Disable GPIO_D clk during run mode 1h = Enable GPIO_D clk during run mode

Copyright © 2017, Texas Instruments Incorporated

15.6.21 GPIO3SWRST Register (offset = 6Ch) [reset = 0h]

GPIO3SWRST is shown in Figure 15-24 and described in Table 15-24.

Figure 15-24. GPIO3SWRST Register

31	30	29	28	27	26	25	24
RESERVED							
R-0h							
23	22	21	20	19	18	17	16
RESERVED							
R-0h							
15	14	13	12	11	10	9	8
RESERVED							
R-0h							
7	6	5	4	3	2	1	0
RESERVED						ENSTS	SWRST
R-0h						R-0h	R/W-0h

Table 15-24. GPIO3SWRST Register Field Descriptions

Bit	Field	Type	Reset	Description
31-2	RESERVED	R	0h	
1	ENSTS	R	0h	GPIO_D_ENABLED_STATUS 0h = GPIO_D Clocks and resets are disabled 1h = GPIO_D Clocks and resets are enabled
0	SWRST	R/W	0h	GPIO_D_SOFT_RESET 0h = De-assert reset for GPIO_D 1h = Assert reset for GPIO_D

Copyright © 2017, Texas Instruments Incorporated

15.6.22 GPIO4CLKEN Register (offset = 70h) [reset = 0h]

GPIO4CLKEN is shown in Figure 15-25 and described in Table 15-25.

Figure 15-25. GPIO4CLKEN Register

31	30	29	28	27	26	25	24
RESERVED							
R-0h							
23	22	21	20	19	18	17	16
RESERVED							DSLPCLKEN
R-0h							R/W-0h
15	14	13	12	11	10	9	8
NU1							SLPCLKEN
R-0h							R/W-0h
7	6	5	4	3	2	1	0
NU2							RUNCLKEN
R-0h							R/W-0h

Table 15-25. GPIO4CLKEN Register Field Descriptions

Bit	Field	Type	Reset	Description
31-17	RESERVED	R	0h	
16	DSLPCLKEN	R/W	0h	GPIO_E_DSLP_CLK_ENABLE 0h = Disable GPIO_E clk during deep-sleep mode 1h = Enable GPIO_E clk during deep-sleep mode
15-9	NU1	R	0h	
8	SLPCLKEN	R/W	0h	GPIO_E_SLP_CLK_ENABLE 0h = Disable GPIO_E clk during sleep mode 1h = Enable GPIO_E clk during sleep mode
7-1	NU2	R	0h	
0	RUNCLKEN	R/W	0h	GPIO_E_RUN_CLK_ENABLE 0h = Disable GPIO_E clk during run mode 1h = Enable GPIO_E clk during run mode

Copyright © 2017, Texas Instruments Incorporated

15.6.23 GPIO4SWRST Register (offset = 74h) [reset = 0h]

GPIO4SWRST is shown in Figure 15-26 and described in Table 15-26.

Figure 15-26. GPIO4SWRST Register

31	30	29	28	27	26	25	24
RESERVED							
R-0h							
23	22	21	20	19	18	17	16
RESERVED							
R-0h							
15	14	13	12	11	10	9	8
RESERVED							
R-0h							
7	6	5	4	3	2	1	0
RESERVED						ENSTS	SWRST
R-0h						R-0h	R/W-0h

Table 15-26. GPIO4SWRST Register Field Descriptions

Bit	Field	Type	Reset	Description
31-2	RESERVED	R	0h	
1	ENSTS	R	0h	GPIO_E_ENABLED_STATUS 0h = GPIO_E Clocks and resets are disabled 1h = GPIO_E Clocks and resets are enabled
0	SWRST	R/W	0h	GPIO_E_SOFT_RESET 0h = De-assert reset for GPIO_E 1h = Assert reset for GPIO_E

Copyright © 2017, Texas Instruments Incorporated

15.6.24 WDTCLKEN Register (offset = 78h) [reset = 0h]

WDTCLKEN is shown in Figure 15-27 and described in Table 15-27.

Figure 15-27. WDTCLKEN Register

31	30	29	28	27	26	25	24
RESERVED						BAUDCLKSEL	
R-0h						R/W-0h	
23	22	21	20	19	18	17	16
RESERVED							DSLPCLKEN
R-0h							R/W-0h
15	14	13	12	11	10	9	8
NU1							SLPCLKEN
R-0h							R/W-0h
7	6	5	4	3	2	1	0
NU2							RUNCLKEN
R-0h							R/W-0h

Table 15-27. WDTCLKEN Register Field Descriptions

Bit	Field	Type	Reset	Description
31-26	RESERVED	R	0h	
25-24	BAUDCLKSEL	R/W	0h	WDOG_A_BAUD_CLK_SEL 00h = Sysclk 01h = REF_CLK (38.4 MHz) 10/11"h = Slow_clk
23-17	RESERVED	R	0h	
16	DSLPCLKEN	R/W	0h	WDOG_A_DSLP_CLK_ENABLE 0h = Disable WDOG_A clk during deep-sleep mode 1h = Enable WDOG_A clk during deep-sleep mode
15-9	NU1	R	0h	
8	SLPCLKEN	R/W	0h	WDOG_A_SLP_CLK_ENABLE 0h = Disable WDOG_A clk during sleep mode 1h = Enable WDOG_A clk during sleep mode
7-1	NU2	R	0h	
0	RUNCLKEN	R/W	0h	WDOG_A_RUN_CLK_ENABLE 0h = Disable WDOG_A clk during run mode 1h = Enable WDOG_A clk during run mode

Copyright © 2017, Texas Instruments Incorporated

15.6.25 WDTSWRST Register (offset = 7Ch) [reset = 0h]

WDTSWRST is shown in Figure 15-28 and described in Table 15-28.

Figure 15-28. WDTSWRST Register

31	30	29	28	27	26	25	24
RESERVED							
R-0h							
23	22	21	20	19	18	17	16
RESERVED							
R-0h							
15	14	13	12	11	10	9	8
RESERVED							
R-0h							
7	6	5	4	3	2	1	0
RESERVED						ENSTS	SWRST
R-0h						R-0h	R/W-0h

Table 15-28. WDTSWRST Register Field Descriptions

Bit	Field	Type	Reset	Description
31-2	RESERVED	R	0h	
1	ENSTS	R	0h	WDOG_A_ENABLED_STATUS 0h = WDOG_A Clocks and resets are disabled 1h = WDOG_A Clocks and resets are enabled
0	SWRST	R/W	0h	WDOG_A_SOFT_RESET 0h = De-assert reset for WDOG_A 1h = Assert reset for WDOG_A

Copyright © 2017, Texas Instruments Incorporated

15.6.26 UART0CLKEN Register (offset = 80h) [reset = 0h]

UART0CLKEN is shown in Figure 15-29 and described in Table 15-29.

Figure 15-29. UART0CLKEN Register

31	30	29	28	27	26	25	24
RESERVED							
R-0h							
23	22	21	20	19	18	17	16
RESERVED							UART0DSLPCLKEN
R-0h							R/W-0h
15	14	13	12	11	10	9	8
NU1							UART0SLPCLKEN
R-0h							R/W-0h
7	6	5	4	3	2	1	0
NU2							UART0RCLKEN
R-0h							R/W-0h

Table 15-29. UART0CLKEN Register Field Descriptions

Bit	Field	Type	Reset	Description
31-17	RESERVED	R	0h	
16	UART0DSLPCLKEN	R/W	0h	UART_A0_DSLP_CLK_ENABLE 0h = Disable UART_A0 clk during deep-sleep mode 1h = Enable UART_A0 clk during deep-sleep mode
15-9	NU1	R	0h	
8	UART0SLPCLKEN	R/W	0h	UART_A0_SLP_CLK_ENABLE 0h = Disable UART_A0 clk during sleep mode 1h = Enable UART_A0 clk during sleep mode
7-1	NU2	R	0h	
0	UART0RCLKEN	R/W	0h	UART_A0_RUN_CLK_ENABLE 0h = Disable UART_A0 clk during run mode 1h = Enable UART_A0 clk during run mode

Copyright © 2017, Texas Instruments Incorporated

15.6.27 UART0SWRST Register (offset = 84h) [reset = 0h]

UART0SWRST is shown in Figure 15-30 and described in Table 15-30.

Figure 15-30. UART0SWRST Register

31	30	29	28	27	26	25	24
RESERVED							
R-0h							
23	22	21	20	19	18	17	16
RESERVED							
R-0h							
15	14	13	12	11	10	9	8
RESERVED							
R-0h							
7	6	5	4	3	2	1	0
RESERVED						ENSTS	SWRST
R-0h						R-0h	R/W-0h

Table 15-30. UART0SWRST Register Field Descriptions

Bit	Field	Type	Reset	Description
31-2	RESERVED	R	0h	
1	ENSTS	R	0h	UART_A0_ENABLED_STATUS 0h = UART_A0 Clocks and resets are disabled 1h = UART_A0 Clocks and resets are enabled
0	SWRST	R/W	0h	UART_A0_SOFT_RESET 0h = De-assert reset for UART_A0 1h = Assert reset for UART_A0

Copyright © 2017, Texas Instruments Incorporated

15.6.28 UART1CLKEN Register (offset = 88h) [reset = 0h]

UART1CLKEN is shown in Figure 15-31 and described in Table 15-31.

Figure 15-31. UART1CLKEN Register

31	30	29	28	27	26	25	24
RESERVED							
R-0h							
23	22	21	20	19	18	17	16
RESERVED							DSLPCLKEN
R-0h							R/W-0h
15	14	13	12	11	10	9	8
NU1							SLPCLKEN
R-0h							R/W-0h
7	6	5	4	3	2	1	0
NU2							RUNCLKEN
R-0h							R/W-0h

Table 15-31. UART1CLKEN Register Field Descriptions

Bit	Field	Type	Reset	Description
31-17	RESERVED	R	0h	
16	DSLPCLKEN	R/W	0h	UART_A1_DSLP_CLK_ENABLE 0h = Disable UART_A1 clk during deep-sleep mode 1h = Enable UART_A1 clk during deep-sleep mode
15-9	NU1	R	0h	
8	SLPCLKEN	R/W	0h	UART_A1_SLP_CLK_ENABLE 0h = Disable UART_A1 clk during sleep mode 1h = Enable UART_A1 clk during sleep mode
7-1	NU2	R	0h	
0	RUNCLKEN	R/W	0h	UART_A1_RUN_CLK_ENABLE 0h = Disable UART_A1 clk during run mode 1h = Enable UART_A1 clk during run mode

Copyright © 2017, Texas Instruments Incorporated

15.6.29 UART1SWRST Register (offset = 8Ch) [reset = 0h]

UART1SWRST is shown in Figure 15-32 and described in Table 15-32.

Figure 15-32. UART1SWRST Register

31	30	29	28	27	26	25	24
RESERVED							
R-0h							
23	22	21	20	19	18	17	16
RESERVED							
R-0h							
15	14	13	12	11	10	9	8
RESERVED							
R-0h							
7	6	5	4	3	2	1	0
RESERVED						ENSTS	SWRST
R-0h						R-0h	R/W-0h

Table 15-32. UART1SWRST Register Field Descriptions

Bit	Field	Type	Reset	Description
31-2	RESERVED	R	0h	
1	ENSTS	R	0h	UART_A1_ENABLED_STATUS 0h = UART_A1 Clocks and resets are disabled 1h = UART_A1 Clocks and resets are enabled
0	SWRST	R/W	0h	UART_A1_SOFT_RESET 0h = De-assert the soft reset for UART_A1 1h = Assert the soft reset for UART_A1

Copyright © 2017, Texas Instruments Incorporated

15.6.30 GPT0CLKCFG Register (offset = 90h) [reset = 0h]

GPT0CLKCFG is shown in Figure 15-33 and described in Table 15-33.

Figure 15-33. GPT0CLKCFG Register

31	30	29	28	27	26	25	24
RESERVED							
R-0h							
23	22	21	20	19	18	17	16
RESERVED							DSLPCLKEN
R-0h							R/W-0h
15	14	13	12	11	10	9	8
NU1							SLPCLKEN
R-0h							R/W-0h
7	6	5	4	3	2	1	0
NU2							RUNCLKEN
R-0h							R/W-0h

Table 15-33. GPT0CLKCFG Register Field Descriptions

Bit	Field	Type	Reset	Description
31-17	RESERVED	R	0h	
16	DSLPCLKEN	R/W	0h	GPT_A0_DSLP_CLK_ENABLE 0h = Disable the GPT_A0 clock during deep-sleep 1h = Enable the GPT_A0 clock during deep-sleep
15-9	NU1	R	0h	
8	SLPCLKEN	R/W	0h	GPT_A0_SLP_CLK_ENABLE 0h = Disable the GPT_A0 clock during sleep 1h = Enable the GPT_A0 clock during sleep
7-1	NU2	R	0h	
0	RUNCLKEN	R/W	0h	GPT_A0_RUN_CLK_ENABLE 0h = Disable the GPT_A0 clock during run 1h = Enable the GPT_A0 clock during run

Copyright © 2017, Texas Instruments Incorporated

15.6.31 GPT0SWRST Register (offset = 94h) [reset = 0h]

GPT0SWRST is shown in Figure 15-34 and described in Table 15-34.

Figure 15-34. GPT0SWRST Register

31	30	29	28	27	26	25	24
RESERVED							
R-0h							
23	22	21	20	19	18	17	16
RESERVED							
R-0h							
15	14	13	12	11	10	9	8
RESERVED							
R-0h							
7	6	5	4	3	2	1	0
RESERVED						ENSTS	SWRST
R-0h						R-0h	R/W-0h

Table 15-34. GPT0SWRST Register Field Descriptions

Bit	Field	Type	Reset	Description
31-2	RESERVED	R	0h	
1	ENSTS	R	0h	GPT_A0_ENABLED_STATUS 0h = GPT_A0 clocks and resets are disabled 1h = GPT_A0 clocks and resets are enabled
0	SWRST	R/W	0h	GPT_A0_SOFT_RESET 0h = De-assert the soft reset for GPT_A0 1h = Assert the soft reset for GPT_A0

Copyright © 2017, Texas Instruments Incorporated

15.6.32 GPT1CLKEN Register (offset = 98h) [reset = 0h]

GPT1CLKEN is shown in Figure 15-35 and described in Table 15-35.

Figure 15-35. GPT1CLKEN Register

31	30	29	28	27	26	25	24
RESERVED							
R-0h							
23	22	21	20	19	18	17	16
RESERVED							DSLPCLKEN
R-0h							R/W-0h
15	14	13	12	11	10	9	8
NU1							SLPCLKEN
R-0h							R/W-0h
7	6	5	4	3	2	1	0
NU2							RUNCLKEN
R-0h							R/W-0h

Table 15-35. GPT1CLKEN Register Field Descriptions

Bit	Field	Type	Reset	Description
31-17	RESERVED	R	0h	
16	DSLPCLKEN	R/W	0h	GPT_A1_DSLP_CLK_ENABLE 0h = Disable the GPT_A1 clock during deep-sleep 1h = Enable the GPT_A1 clock during deep-sleep
15-9	NU1	R	0h	
8	SLPCLKEN	R/W	0h	GPT_A1_SLP_CLK_ENABLE 0h = Disable the GPT_A1 clock during sleep 1h = Enable the GPT_A1 clock during sleep
7-1	NU2	R	0h	
0	RUNCLKEN	R/W	0h	GPT_A1_RUN_CLK_ENABLE 0h = Disable the GPT_A1 clock during run 1h = Enable the GPT_A1 clock during run

Copyright © 2017, Texas Instruments Incorporated

15.6.33 GPT1SWRST Register (offset = 9Ch) [reset = 0h]

GPT1SWRST is shown in Figure 15-36 and described in Table 15-36.

Figure 15-36. GPT1SWRST Register

31	30	29	28	27	26	25	24
RESERVED							
R-0h							
23	22	21	20	19	18	17	16
RESERVED							
R-0h							
15	14	13	12	11	10	9	8
RESERVED							
R-0h							
7	6	5	4	3	2	1	0
RESERVED						ENSTS	SWRST
R-0h						R-0h	R/W-0h

Table 15-36. GPT1SWRST Register Field Descriptions

Bit	Field	Type	Reset	Description
31-2	RESERVED	R	0h	
1	ENSTS	R	0h	GPT_A1_ENABLED_STATUS 0h = GPT_A1 clocks and resets are disabled 1h = GPT_A1 clocks and resets are enabled
0	SWRST	R/W	0h	GPT_A1_SOFT_RESET 0h = De-assert the soft reset for GPT_A1 1h = Assert the soft reset for GPT_A1

Copyright © 2017, Texas Instruments Incorporated

15.6.34 GPT2CLKEN Register (offset = A0h) [reset = 0h]

GPT2CLKEN is shown in Figure 15-37 and described in Table 15-37.

Figure 15-37. GPT2CLKEN Register

31	30	29	28	27	26	25	24
RESERVED							
R-0h							
23	22	21	20	19	18	17	16
RESERVED							DSLPCLKEN
R-0h							R/W-0h
15	14	13	12	11	10	9	8
NU1							SLPCLKEN
R-0h							R/W-0h
7	6	5	4	3	2	1	0
NU2							RUNCLKEN
R-0h							R/W-0h

Table 15-37. GPT2CLKEN Register Field Descriptions

Bit	Field	Type	Reset	Description
31-17	RESERVED	R	0h	
16	DSLPCLKEN	R/W	0h	GPT_A2_DSLP_CLK_ENABLE 0h = Disable the GPT_A2 clock during deep-sleep 1h = Enable the GPT_A2 clock during deep-sleep
15-9	NU1	R	0h	
8	SLPCLKEN	R/W	0h	GPT_A2_SLP_CLK_ENABLE 0h = Disable the GPT_A2 clock during sleep 1h = Enable the GPT_A2 clock during sleep
7-1	NU2	R	0h	
0	RUNCLKEN	R/W	0h	GPT_A2_RUN_CLK_ENABLE 0h = Disable the GPT_A2 clock during run 1h = Enable the GPT_A2 clock during run

Copyright © 2017, Texas Instruments Incorporated

15.6.35 GPT2SWRST Register (offset = A4h) [reset = 0h]

GPT2SWRST is shown in Figure 15-38 and described in Table 15-38.

Figure 15-38. GPT2SWRST Register

31	30	29	28	27	26	25	24
RESERVED							
R-0h							
23	22	21	20	19	18	17	16
RESERVED							
R-0h							
15	14	13	12	11	10	9	8
RESERVED							
R-0h							
7	6	5	4	3	2	1	0
RESERVED						ENSTS	SWRST
R-0h						R-0h	R/W-0h

Table 15-38. GPT2SWRST Register Field Descriptions

Bit	Field	Type	Reset	Description
31-2	RESERVED	R	0h	
1	ENSTS	R	0h	GPT_A2_ENABLED_STATUS 0h = GPT_A2 clocks and resets are disabled 1h = GPT_A2 clocks and resets are enabled
0	SWRST	R/W	0h	GPT_A2_SOFT_RESET 0h = De-assert the soft reset for GPT_A2 1h = Assert the soft reset for GPT_A2

Copyright © 2017, Texas Instruments Incorporated

15.6.36 GPT3CLKEN Register (offset = A8h) [reset = 0h]

GPT3CLKEN is shown in Figure 15-39 and described in Table 15-39.

Figure 15-39. GPT3CLKEN Register

31	30	29	28	27	26	25	24
RESERVED							
R-0h							
23	22	21	20	19	18	17	16
RESERVED							DSLPCLKEN
R-0h							R/W-0h
15	14	13	12	11	10	9	8
NU1							SLPCLKEN
R-0h							R/W-0h
7	6	5	4	3	2	1	0
NU2							RUNCLKEN
R-0h							R/W-0h

Table 15-39. GPT3CLKEN Register Field Descriptions

Bit	Field	Type	Reset	Description
31-17	RESERVED	R	0h	
16	DSLPCLKEN	R/W	0h	GPT_A3_DSLP_CLK_ENABLE 0h = Disable the GPT_A3 clock during deep-sleep 1h = Enable the GPT_A3 clock during deep-sleep
15-9	NU1	R	0h	
8	SLPCLKEN	R/W	0h	GPT_A3_SLP_CLK_ENABLE 0h = Disable the GPT_A3 clock during sleep 1h = Enable the GPT_A3 clock during sleep
7-1	NU2	R	0h	
0	RUNCLKEN	R/W	0h	GPT_A3_RUN_CLK_ENABLE 0h = Disable the GPT_A3 clock during run 1h = Enable the GPT_A3 clock during run

Copyright © 2017, Texas Instruments Incorporated

15.6.37 GPT3SWRST Register (offset = ACh) [reset = 0h]

GPT3SWRST is shown in Figure 15-40 and described in Table 15-40.

Figure 15-40. GPT3SWRST Register

31	30	29	28	27	26	25	24
RESERVED							
R-0h							
23	22	21	20	19	18	17	16
RESERVED							
R-0h							
15	14	13	12	11	10	9	8
RESERVED							
R-0h							
7	6	5	4	3	2	1	0
RESERVED						ENSTS	SWRST
R-0h						R-0h	R/W-0h

Table 15-40. GPT3SWRST Register Field Descriptions

Bit	Field	Type	Reset	Description
31-2	RESERVED	R	0h	
1	ENSTS	R	0h	GPT_A3_ENABLED_STATUS 0h = GPT_A3 Clocks and resets are disabled 1h = GPT_A3 Clocks and resets are enabled
0	SWRST	R/W	0h	GPT_A3_SOFT_RESET 0h = De-assert the soft reset for GPT_A3 1h = Assert the soft reset for GPT_A3

Copyright © 2017, Texas Instruments Incorporated

15.6.38 MCASPCLKCFG0 Register (offset = B0h) [reset = A0000h]

MCASPCLKCFG0 is shown in Figure 15-41 and described in Table 15-41.

Figure 15-41. MCASPCLKCFG0 Register

31	30	29	28	27	26	25	24	23	22	21	20	19	18	17	16
RESERVED						DIVISR									
R-0h						R/W-Ah									
15	14	13	12	11	10	9	8	7	6	5	4	3	2	1	0
FRACTN															
R/W-0h															

Table 15-41. MCASPCLKCFG0 Register Field Descriptions

Bit	Field	Type	Reset	Description
31-26	RESERVED	R	0h	
25-16	DIVISR	R/W	Ah	MCASP_FRAC_DIV_DIVISOR. If the root clock frequency is Fref and the required output clock frequency is Freq, the ratio of these two frequencies (Fref/Freq) can be represented as = I.F where I is the integer part of the ratio and F is the fractional part of the ratio.
15-0	FRACTN	R/W	0h	MCASP_FRAC_DIV_FRACTION. If the root clock frequency is Fref and the required output clock frequency is Freq, the ratio of these two frequencies (Fref/Freq) can be represented as = I.F where I is the integer part of the ratio and F is the fractional part of the ratio.

Copyright © 2017, Texas Instruments Incorporated

15.6.39 MCASPCLKCFG1 Register (offset = B4h) [reset = 0h]

MCASPCLKCFG1 is shown in Figure 15-42 and described in Table 15-42.

Figure 15-42. MCASPCLKCFG1 Register

31	30	29	28	27	26	25	24
RESERVED							
R-0h							
23	22	21	20	19	18	17	16
RESERVED							DIVIDRSWRST
R-0h							R/W-0h
15	14	13	12	11	10	9	8
RESERVED						SPARE	
R-0h						R/W-0h	
7	6	5	4	3	2	1	0
SPARE							
R/W-0h							

Table 15-42. MCASPCLKCFG1 Register Field Descriptions

Bit	Field	Type	Reset	Description
31-17	RESERVED	R	0h	
16	DIVIDRSWRST	R/W	0h	MCASP_FRAC_DIV_SOFT_RESET 0h = Do not assert the reset for MCASP frac clk-div 1h = Assert the reset for MCASP Frac-clk div
15-10	RESERVED	R	0h	
9-0	SPARE	R/W	0h	MCASP_FRAC_DIV_PERIOD. This bitfield is not used in HW. Can be used as a spare RW register.

Copyright © 2017, Texas Instruments Incorporated

15.6.40 I2CLCKEN Register (offset = D8h) [reset = 0h]

I2CLCKEN is shown in Figure 15-43 and described in Table 15-43.

Figure 15-43. I2CLCKEN Register

31	30	29	28	27	26	25	24
RESERVED							
R-0h							
23	22	21	20	19	18	17	16
RESERVED							DSLPCLKEN
R-0h							R/W-0h
15	14	13	12	11	10	9	8
NU1							SLPCLKEN
R-0h							R/W-0h
7	6	5	4	3	2	1	0
NU2							RUNCLKEN
R-0h							R/W-0h

Table 15-43. I2CLCKEN Register Field Descriptions

Bit	Field	Type	Reset	Description
31-17	RESERVED	R	0h	
16	DSLPCLKEN	R/W	0h	I2C_DSLP_CLK_ENABLE 0h = Disable the I2C clock during deep-sleep 1h = Enable the I2C Clock during deep-sleep
15-9	NU1	R	0h	
8	SLPCLKEN	R/W	0h	I2C_SLP_CLK_ENABLE 0h = Disable the I2C clock during sleep 1h = Enable the I2C clock during sleep
7-1	NU2	R	0h	
0	RUNCLKEN	R/W	0h	I2C_RUN_CLK_ENABLE 0h = Disable the I2C clock during run 1h = Enable the I2C clock during run

Copyright © 2017, Texas Instruments Incorporated

15.6.41 I2CSWRST Register (offset = DCh) [reset = 0h]

I2CSWRST is shown in Figure 15-44 and described in Table 15-44.

Figure 15-44. I2CSWRST Register

31	30	29	28	27	26	25	24
RESERVED							
R-0h							
23	22	21	20	19	18	17	16
RESERVED							
R-0h							
15	14	13	12	11	10	9	8
RESERVED							
R-0h							
7	6	5	4	3	2	1	0
RESERVED						ENSTS	SWRST
R-0h						R-0h	R/W-0h

Table 15-44. I2CSWRST Register Field Descriptions

Bit	Field	Type	Reset	Description
31-2	RESERVED	R	0h	
1	ENSTS	R	0h	I2C_ENABLED_STATUS 0h = I2C clocks and resets are disabled 1h = I2C Clocks and resets are enabled
0	SWRST	R/W	0h	I2C_SOFT_RESET 0h = De-assert the soft reset for Shared-I2C 1h = Assert the soft reset for Shared-I2C

Copyright © 2017, Texas Instruments Incorporated

15.6.42 LPDSREQ Register (offset = E4h) [reset = 0h]

LPDSREQ is shown in Figure 15-45 and described in Table 15-45.

Figure 15-45. LPDSREQ Register

31	30	29	28	27	26	25	24
RESERVED							
R-0h							
23	22	21	20	19	18	17	16
RESERVED							
R-0h							
15	14	13	12	11	10	9	8
RESERVED							
R-0h							
7	6	5	4	3	2	1	0
RESERVED							LPDSREQ
R-0h							R/W-0h

Table 15-45. LPDSREQ Register Field Descriptions

Bit	Field	Type	Reset	Description
31-1	RESERVED	R	0h	
0	LPDSREQ	R/W	0h	APPS_LPDS_REQ 1h = Request for LPDS

Copyright © 2017, Texas Instruments Incorporated

15.6.43 TURBOREQ Register (offset = ECh) [reset = 0h]

TURBOREQ is shown in Figure 15-46 and described in Table 15-46.

Figure 15-46. TURBOREQ Register

31	30	29	28	27	26	25	24
RESERVED							
R-0h							
23	22	21	20	19	18	17	16
RESERVED							
R-0h							
15	14	13	12	11	10	9	8
RESERVED							
R-0h							
7	6	5	4	3	2	1	0
RESERVED							TURBOREQ
R-0h							R/W-0h

Table 15-46. TURBOREQ Register Field Descriptions

Bit	Field	Type	Reset	Description
31-1	RESERVED	R	0h	
0	TURBOREQ	R/W	0h	APPS_TURBO_REQ 1h = Request for TURBO

Copyright © 2017, Texas Instruments Incorporated

15.6.44 DSLPWAKECFG Register (offset = 108h) [reset = 0h]

DSLPWAKECFG is shown in Figure 15-47 and described in Table 15-47.

Figure 15-47. DSLPWAKECFG Register

31	30	29	28	27	26	25	24
RESERVED							
R-0h							
23	22	21	20	19	18	17	16
RESERVED							
R-0h							
15	14	13	12	11	10	9	8
RESERVED							
R-0h							
7	6	5	4	3	2	1	0
RESERVED						EXITDSLPBYNWPEN	EXITDSLPBYTMREN
R-0h						R/W-0h	R/W-0h

Table 15-47. DSLPWAKECFG Register Field Descriptions

Bit	Field	Type	Reset	Description
31-2	RESERVED	R	0h	
1	EXITDSLPBYNWPEN	R/W	0h	DSLP_WAKE_FROM_NWP_ENABLE 0h = Disable NWP to wake APPS from deep-sleep 1h = Enable the NWP to wake APPS from deep-sleep
0	EXITDSLPBYTMREN	R/W	0h	DSLP_WAKE_TIMER_ENABLE 0h = Disable deep-sleep wake timer in APPS RCM 1h = Enable deep-sleep wake timer in APPS RCM for deep-sleep

Copyright © 2017, Texas Instruments Incorporated

15.6.45 DSLPTIMRCFG Register (offset = 10Ch) [reset = 0h]

DSLPTIMRCFG is shown in Figure 15-48 and described in Table 15-48.

Figure 15-48. DSLPTIMRCFG Register

31	30	29	28	27	26	25	24	23	22	21	20	19	18	17	16	15	14	13	12	11	10	9	8	7	6	5	4	3	2	1	0
TIMROPPCFG																TIMRCFG															
R/W-0h																R/W-0h															

Table 15-48. DSLPTIMRCFG Register Field Descriptions

Bit	Field	Type	Reset	Description
31-16	TIMROPPCFG	R/W	0h	DSLP_WAKE_TIMER_OPP_CFG Configuration (in slow_clks) which indicates when to request for OPP during deep-sleep exit.
15-0	TIMRCFG	R/W	0h	DSLP_WAKE_TIMER_WAKE_CFG Configuration (in slow_clks) which indicates when to request for WAKE during deep-sleep exit.

Copyright © 2017, Texas Instruments Incorporated

15.6.46 SLPWAKEEN Register (offset = 110h) [reset = 0h]

SLPWAKEEN is shown in Figure 15-49 and described in Table 15-49.

Figure 15-49. SLPWAKEEN Register

31	30	29	28	27	26	25	24
RESERVED							
R-0h							
23	22	21	20	19	18	17	16
RESERVED							
R-0h							
15	14	13	12	11	10	9	8
RESERVED							
R-0h							
7	6	5	4	3	2	1	0
RESERVED						EITBYNWP	EXITBYTIMR
R-0h						R/W-0h	R/W-0h

Table 15-49. SLPWAKEEN Register Field Descriptions

Bit	Field	Type	Reset	Description
31-2	RESERVED	R	0h	
1	EITBYNWP	R/W	0h	SLP_WAKE_FROM_NWP_ENABLE 0h = Disable the sleep wakeup due to NWP request 1h = Enable the sleep wakeup due to NWP request.
0	EXITBYTIMR	R/W	0h	SLP_WAKE_TIMER_ENABLE 0h = Disable the sleep wakeup due to sleep-timer 1h = Enable the sleep wakeup due to sleep-timer

Copyright © 2017, Texas Instruments Incorporated

15.6.47 SLPTMRCFG Register (offset = 114h) [reset = 0h]

SLPTMRCFG is shown in Figure 15-50 and described in Table 15-50.

Figure 15-50. SLPTMRCFG Register

31	30	29	28	27	26	25	24	23	22	21	20	19	18	17	16	15	14	13	12	11	10	9	8	7	6	5	4	3	2	1	0
TMRCFG																															
R/W-0h																															

Table 15-50. SLPTMRCFG Register Field Descriptions

Bit	Field	Type	Reset	Description
31-0	TMRCFG	R/W	0h	SLP_WAKE_TIMER_CFG Configuration (number of sysclks-80MHz) for the Sleep wake-up timer.

Copyright © 2017, Texas Instruments Incorporated

15.6.48 WAKENWP Register (offset = 118h) [reset = 0h]

WAKENWP is shown in Figure 15-51 and described in Table 15-51.

Figure 15-51. WAKENWP Register

31	30	29	28	27	26	25	24
RESERVED							
R-0h							
23	22	21	20	19	18	17	16
RESERVED							
R-0h							
15	14	13	12	11	10	9	8
RESERVED							
R-0h							
7	6	5	4	3	2	1	0
RESERVED							WAKENWP
R-0h							R/W-0h

Table 15-51. WAKENWP Register Field Descriptions

Bit	Field	Type	Reset	Description
31-1	RESERVED	R	0h	
0	WAKENWP	R/W	0h	APPS_TO_NWP_WAKEUP_REQUEST. When 1 => APPS generated a wake request to NWP (When NWP is in any of its low-power modes : SLP/DSLP/LPDS)

Copyright © 2017, Texas Instruments Incorporated

15.6.49 RCM_IS Register (offset = 120h) [reset = 0h]

RCM_IS is shown in Figure 15-52 and described in Table 15-52.

Figure 15-52. RCM_IS Register

31	30	29	28	27	26	25	24
RESERVED							
R-0h							
23	22	21	20	19	18	17	16
RESERVED							
R-0h							
15	14	13	12	11	10	9	8
RESERVED	WAKETIMRIRQ	RESERVED	PLLLOCK	RESERVED			
R-0h	R-0h	R-0h	R-0h	R-0h			
7	6	5	4	3	2	1	0
RESERVED				EXITDSLPBYTMR	EXITSLPBYTMR	EXITDSLPBYNWP	EXITSLPBYNWP
R-0h				R-0h	R-0h	R-0h	R-0h

Table 15-52. RCM_IS Register Field Descriptions

Bit	Field	Type	Reset	Description
31-15	RESERVED	R	0h	
14	WAKETIMRIRQ	R	0h	To enable the RTC timer interrupt, set 0th bit of HIB3P3:MEM_HIB_RTC_IRQ_ENABLE(0x4402 F854) and 2nd bit of RCM_IEN(0x124) to 1, 1h = indicates interrupt to the Apps processor due to the RTC timer reaching the programmed value.
13	RESERVED	R	0h	
12	PLLLOCK	R	0h	Enable this interrupt by setting 0th bit of RCM_IEN(0x124). 1h = indicates that an interrupt was received by the processor because of PLL lock.
11-4	RESERVED	R	0h	
3	EXITDSLPBYTMR	R	0h	apps_deep_sleep_timer_wake 1h = Indicates that deep-sleep timer expiry had caused the wakeup from deep-sleep.
2	EXITSLPBYTMR	R	0h	apps_sleep_timer_wake 1h = Indicates that sleep timer expiry had caused the wakeup from sleep.
1	EXITDSLPBYNWP	R	0h	apps_deep_sleep_wake_from_nwp 1h = Indicates that NWP had caused the wakeup from deep-sleep.
0	EXITSLPBYNWP	R	0h	apps_sleep_wake_from_nwp 1h = Indicates that NWP had caused the wakeup from Sleep

Copyright © 2017, Texas Instruments Incorporated

15.6.50 RCM_IEN Register (offset = 124h) [reset = 0h]

RCM_IEN is shown in Figure 15-53 and described in Table 15-53.

Figure 15-53. RCM_IEN Register

31	30	29	28	27	26	25	24
RESERVED							
R-0h							
23	22	21	20	19	18	17	16
RESERVED							
R-0h							
15	14	13	12	11	10	9	8
RESERVED							
R-0h							
7	6	5	4	3	2	1	0
RESERVED					WAKETIMERIRQ	RESERVED	PLLLOCKIRQ
R-0h					R/W-0h	R-0h	R/W-0h

Table 15-53. RCM_IEN Register Field Descriptions

Bit	Field	Type	Reset	Description
31-3	RESERVED	R	0h	
2	WAKETIMERIRQ	R/W	0h	To enable RTC timer interrupt set 0th bit of HIB3P3:MEM_HIB_RTC_IRQ_ENABLE(0x4402 F854) to 1 0h = Unmask this interrupt. 1h = Unmask interrupt to the Apps processor when RTC timer reaches the programmed value.
1	RESERVED	R	0h	
0	PLLLOCKIRQ	R/W	0h	0h = Mask this interrupt 1h = Unmask Interrupt to Apps processor when PLL is locked.

Copyright © 2017, Texas Instruments Incorporated

I/O Pads and Pin Multiplexing

Topic **Page**

16.1 Overview 561
16.2 I/O Pad Electrical Specifications 562
16.3 Analog-Digital Pin Multiplexing 563
16.4 Special Ana/DIG Pins 564
16.5 Analog Mux Control Registers 566
16.6 Pins Available for Applications 568
16.7 Functional Pin Mux Configurations 570
16.8 Pin Mapping Recommendations 584

Copyright © 2017, Texas Instruments Incorporated

16.1 Overview

The CC32xx features flexible wide-voltage I/Os. Supported features are:

- Programmable drive strength from 2 mA to 14 mA (nominal condition) in steps of 2 mA.
- Open drain mode
- Output buffer isolation
- Automatic output isolation during reset and hibernate
- Configurable pullup and pulldown (10-uA nominal)
- Software configurable pad state retention during LPDS

Each I/O pad cell in the CC32xx has the following ports:

- PAD: I/O pad connected to package pin and external components
- ODI: Level-shifted data from from PAD to core logic
- IDO: Input to I/O-cell from core.
- ioden: When level 1, this disables the PMOS xtors of the output stages, making them open-drain type. For example, I2C may use a open-drain configuration. Value gets latched at the rising edge of RET33.
- ioe_n: If level 0, this enables the IDO to PAD path. Otherwise, PAD is tristated (except for the PU/PD, which are independent).
- ioen33: This control signal is driven by hibernate controller. Level 1 enables the IDO to PAD path. Otherwise, PAD is made Hi-Z (except for the PU/PD, which are independent). This is automatically controlled by hardware to Hi-Z; the main o/p drivers during chip reset (nRESET=0). On first time power-up, the chip performs a sense-on-power detection of board-level pullup and pulldown resistors on three specific device pins (SOP0, SOP1, and SOP2); after this is done, this control signal is made high. The user-defined I/O pads still remain in Hi-Z state until configured by the user program.
- 3-bit drive strength control (value gets latched at rising edge of RET33):
  - i2maen: Level 1 enables the approximately 2-mA output stage (in parallel with 4-mA and 8-mA drivers, if enabled)
  - i4maen: Level 1 enables the approximately 4-mA output stage (in parallel with 2-mA and 8-mA drivers, if enabled)

  NOTE: Any drive strength between 2 mA and 6 mA can be realized by enabling one or more of above drivers together. Treat these 3 pins as 3-bit binary-coded strength control.
- Pullup and pulldown controls (value gets latched at rising edge of RET33. Works independent of these: ioe_n, ioen33, i2maen/i4maen/i8maen)
  - iwkpuen: 10-uA pull up (NOM_25C_3.3V)
  - iwkpden: 10-uA pull down (NOM_25C_3.3V)
- RET33: Control signal from hibernate controller module. Puts the I/O in low power retention mode. The control and data signals are latched on rising edge (except ioen33). The internal bias for high-speed level-shifter is automatically disabled when RET33 is 1. By default, this signal is controlled by the power management state machine in the hibernate controller. By default, this signal goes high on entry to hibernate mode. On exit from hibernate, RET33 returns to level 0 to allow the device firmware and application software to access the I/O pads.

Copyright © 2017, Texas Instruments Incorporated

16.2 I/O Pad Electrical Specifications

Table 16-1. GPIO Pin Electrical Specifications (25 C)(Except Pin 29, 30, 45, 50, 52, 53)

GPIO Pin Electrical Specifications (25 C)(Except Pin 29, 30, 45, 50, 52 , 53)					
Parameter	Parameter Name	Min	Nom	Max	Unit
C_{IN}	Pin capacitance		4		pF
V_{IH}	High-level input voltage	0.65* V_{DD}		V_{DD} + 0.5 V	V
V_{IL}	Low-level input voltage	-0.5		0.35* V_{DD}	V
I_{IH}	High-level input current		5		nA
I_{IL}	Low-level input current		5		nA
V_{OH}	High-level output voltage (V_{DD}= 3.0 V)	2.4			V
V_{OL}	Low-level output voltage (V_{DD}= 3.0 V)			0.4	V
I_{OH}	High-level source current, V_{OH}=2.4				
	2-mA Drive	2			mA
	4-mA Drive	4			mA
	6-mA Drive	6			mA
I_{OL}	Low-level sink current, VOH=0.4				
	2-mA Drive	2			mA
	4-mA Drive	4			mA
	6-mA Drive	6			mA

Table 16-2. GPIO Pin Electrical Specifications (25 C) For Pins 29, 30, 45, 50, 52, 53

GPIO Pin Electrical Specifications (25 C) For Pins 29, 30, 45, 50, 52, 53					
Parameter	Parameter Name	Min	Nom	Max	Unit
C_{IN}	Pin capacitance		7		pF
V_{IH}	High-level input voltage	0.65* V_{DD}		V_{DD} + 0.5 V	V
V_{IL}	Low-level input voltage	-0.5		0.35* V_{DD}	V
I_{IH}	High-level input current		50		nA
I_{IL}	Low-level input current		50		nA
V_{OH}	High-level output voltage (V_{DD} = 3.0 V)	2.4			V
I_{OH}	High-level source current, V_{OH} = 2.4				
	2-mA Drive	1.5			mA
	4-mA Drive	2.5			mA
	6-mA Drive	3.5			mA
I_{OL}	Low-level sink current, V_{OH} = 0.4				
	2-mA Drive	1.5			mA
	4-mA Drive	2.5			mA
	6-mA Drive	3.5			mA

Table 16-3. Pin Internal Pullup and Pulldown Electrical Specifications (25 C)

Parameter	Parameter Name	Min	Nom	Max	Unit
I_{OH}	Pullup current, V_{OH} = 2.4 (V_{DD} = 3.0 V)	5			uA
I_{OL}	Pulldown current, V_{OL} = 0.4 (V_{DD} = 3.0 V)	5			uA

Copyright © 2017, Texas Instruments Incorporated

NOTE: TI recommends using the lowest possible drive-strength that is adequate for the applications. This minimizes the risk of interference to WLAN radio and mitigates any potential degradation of RF sensitivity and performance. The default drive-strength setting is 6 mA.

16.3 Analog-Digital Pin Multiplexing

The CC32xx implements an advanced analog-digital pin multiplexing scheme to maximize the number of functional signals in a compact 64-pin QFN package. Pins are multiplexed with analog-test, RF-test, clock and power-management functionalities. This is shown in Figure 16-1.

The control registers for the analog signal mux and switches (S1 through S10 in Figure 16-1) are described in Section 16.5.

Copyright © 2017, Texas Instruments Incorporated

Figure 16-1. Board Configuration to Use Pins 45 and 52 as Digital Signals

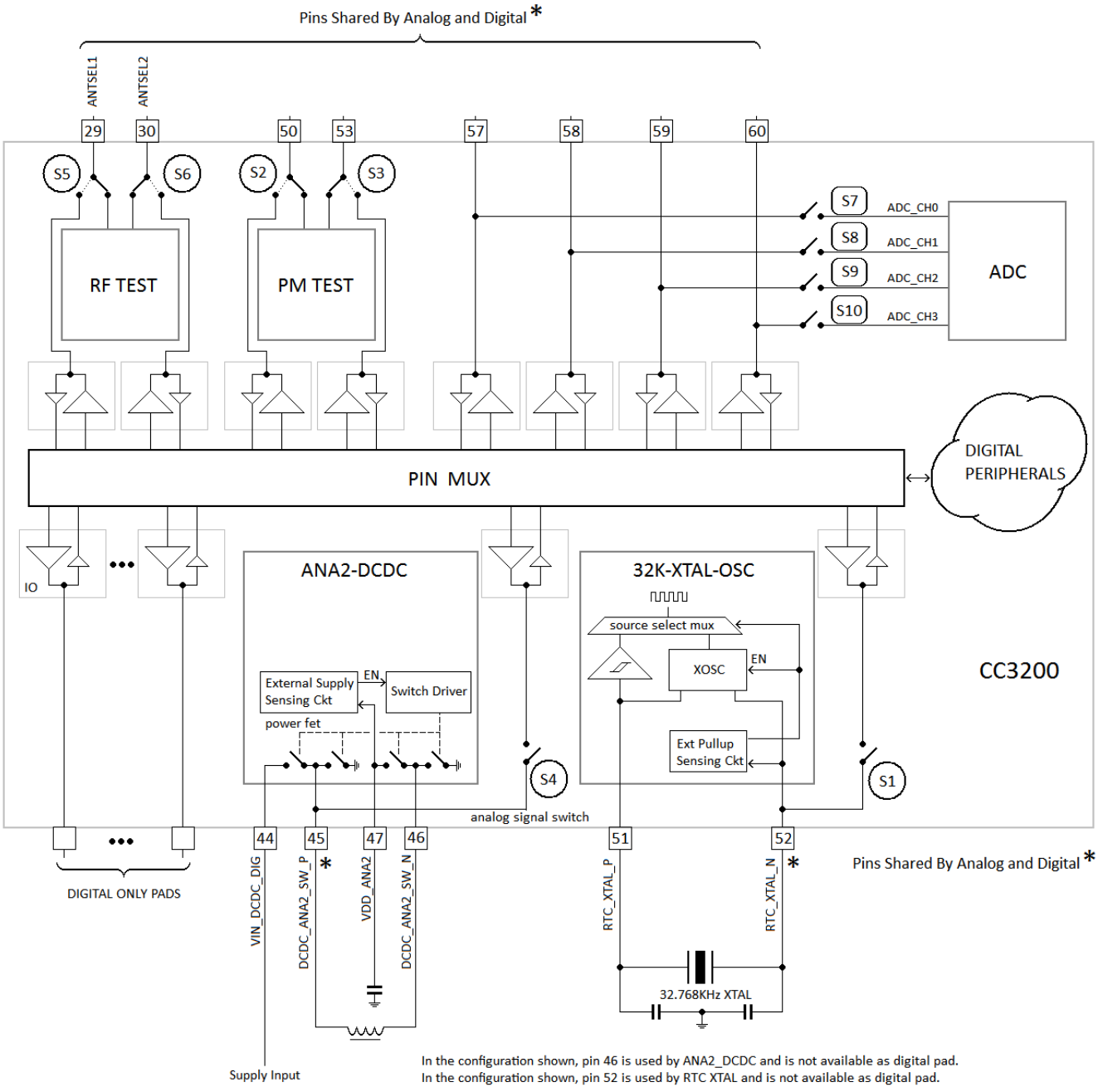

16.4 Special Ana/DIG Pins

16.4.1 Pin 45 and 52

Pin 45 and pin 52 are used by an internal DC-DC (ANA2_DCDC) and the RTC XTAL oscillator, respectively. These modules use automatic configuration sensing. Thus, some board-level configuration is required to use pin 45 and pin 52 as digital pads. This is shown in Figure 16-2.

Copyright © 2017, Texas Instruments Incorporated

NOTE: In a CC32xxR device, ANA2 DC-DC is not required, which allows pins to be used for digital functions. However, pin 47 must be shorted to the supply input.

Typically pin 52 is used up for RTC XTAL in most applications. In some applications, however, a 32.768-KHz square wave clock may be available on board. In such cases, the XTAL may be removed, freeing up pin 52 for digital functions. The external clock must then be applied at pin 51. For the chip to automatically detect this configuration, a 100K pullup resistor must be connected between pin 52 and the supply line. To prevent false detection, TI recommends that pin 52 is used for output-only functionalities.

Figure 16-2. Board Configuration to Use Pins 45 and 52 as Digital Signals

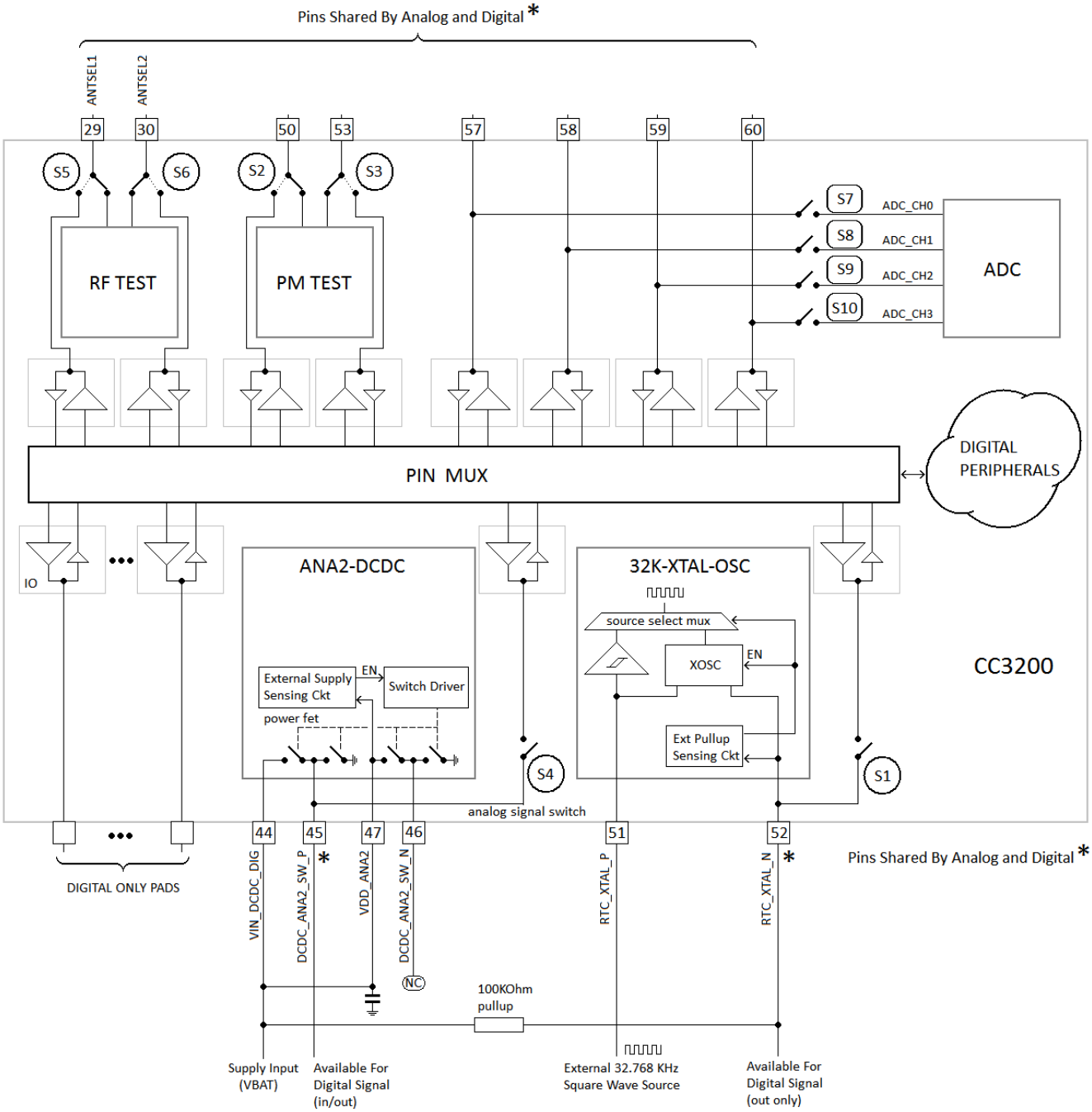

Board level configuration required to use Pin 45 and Pin 52 for digital signals

Copyright © 2017, Texas Instruments Incorporated

16.4.2 Pin 29 and 30

Pin 29 and pin 30 are reserved for WLAN antenna diversity. These pins control an external RF switch, which multiplexes the RF pin of the CC32xx between two antennas. These pins should not be used for other functions.

16.4.3 Pin 57, 58, 59, 60

These pins are shared by the ADC inputs and digital I/O pad cells.

NOTE: The ADC inputs are tolerant up to 1.8 V. The digital pads, on the other hand, can swing up to 3.63 V. Thus, care must be taken to prevent accidental damage to the ADC inputs. TI recommends that the output buffers of the digital I/Os corresponding to the desired ADC channel should be disabled first (for example, by making them Hi-Z), and thereafter the respective pass switches (S7, S8, S9, and S10) should be enabled.

16.5 Analog Mux Control Registers

The internal analog switches and muxes for the ana-dig pins must be configured correctly for proper device operation, and to avoid damaging the device. Once a digital I/O pad cell is routed correctly to the package pin using these analog switches, the functional pin-mux must be configured to select the desired digital interface pin to be brought out of the chip. In other words, these pins require two levels of mux configuration.

The CC32xx ROM firmware automatically configures the analog switches and muxes for pins 29, 30, 45, 50, 52, and 53 as part of the chip initialization sequence, which occurs after exiting from global reset (nRESET pulled high from low), exiting from hibernate, or exiting from LPDS. The application code can directly use these six pins like any other digital pins.

The ADC inputs, on the other hand, can tolerate levels only up to 1.8 V. Application code must therefore enable the analog switches for one or more ADC inputs, after ensuring there are no other internal or external drivers on the pins that can go above 1.8 V. The output buffer, pullup, and pulldown should be disabled while ADC inputs are connected to the pins, to avoid damaging the device.

Table 16-4 describes the register bits used to configure the internal analog switches and muxes for the ana-dig pins.

Table 16-4. Analog Mux Control Registers and Bits

Analog Mux Control Registers and Bits				
Pin	**Analog Mux Control Register and Bit**	**Write Values**	**Reset Value**	**Notes**
29	Register: MEM_TOPMUXCTRL_IFORCE Address: 0x4402 E178 Bit [0]	0: GPIO26 Digital path not enabled 1: GPIO26 Digital path enabled	0	ANTSEL1 (GPIO26) Device init FW enables the digital path. No user configuration required for the analog mux.
30	Register: MEM_TOPMUXCTRL_IFORCE Address: 0x4402 E178 Bit [1]	0: GPIO27 Digital path not enabled 1: GPIO27 Digital path enabled	0	ANTSEL2 (GPIO27) Device init FW enables the digital path. No user configuration required for the analog mux.
45	Register: MEM_HIB_CONFIG Address: 0x4402 F850 Bit [19]	0: Digital path not enabled 1: Digital path enabled	0	Device init FW enables the digital path. No user configuration required for the analog mux.
50	Register: MEM_HIB_CONFIG Address: 0x4402 F850 Bit [17]	0: Digital path not enabled 1: Digital path enabled	0	Device init FW enables the digital path. No user configuration required for the analog mux.

Copyright © 2017, Texas Instruments Incorporated

Table 16-4. Analog Mux Control Registers and Bits (continued)

Analog Mux Control Registers and Bits				
52	Register: MEM_HIB_CONFIG Address: 0x4402 F850 Bit [16]	0: Digital path not enabled 1: Digital path enabled	0	Device init FW enables the digital path. No user configuration required for the analog mux.
53	Register: MEM_HIB_CONFIG Address: 0x4402 F850 Bit [18]	0: Digital path not enabled 1: Digital path enabled	0	Device init FW enables the digital path. No user configuration required for the analog mux.
57	Register: ADCSPARE1 Address: 0x4402 E8B8 Bit [1]	0: ADC channel 0 path is not enabled 1: ADC channel 0 path is enabled	0	Digital I/O cell is always connected to this pin, and application software must make the digital I/O Hi-Z before enabling analog mux, to prevent damaging the device.
58	Register: ADCSPARE1 Address: 0x4402 E8B8 Bit [2]	0: ADC channel 1 path is not enabled 1: ADC channel 1 path is enabled	0	Digital I/O cell is always connected to this pin, and application software must make the digital I/O Hi-Z before enabling analog mux, to prevent damaging the device.
59	Register: ADCSPARE1 Address: 0x4402 E8B8 Bit [3]	0: ADC channel 2 path is not enabled 1: ADC channel 2 path is enabled	0	Digital I/O cell is always connected to this pin, and application software must make the digital I/O Hi-Z before enabling analog mux, to prevent damaging the device.
60	Register: ADCSPARE1 Address: 0x4402 E8B8 Bit [4]	0: ADC channel 3 path is not enabled 1: ADC channel 3 path is enabled	0	Digital I/O cell is always connected to this pin, and application software must make the digital I/O Hi-Z before enabling analog mux, to prevent damaging the device.

Table 16-5 describes the default behavior and configurations required for some of the ana-dig multiplexed I/Os used for digital signals.

Table 16-5. Board Level Behavior

Board Level Behavior			
Pin	**Board Level Configuration and Usage**	**Default State At First Powerup or Forced Reset**	**State After Disabling Analog Path(in ACTIVE, LPDS, HIB power modes)**
29	Connected to enable pin of RF switch (ANTSEL1). Other usage not recommended.	Analog is isolated. Digital I/O cell is also isolated.	Determined by the I/O cell state, like other digital I/Os.
30	Connected to enable pin of RF switch (ANTSEL2). Other usage not recommended.	Analog is isolated. Digital I/O cell is also isolated.	Determined by the I/O cell state, like other digital I/Os.
45	VDD_ANA2 (pin 47) must be shorted to input supply rail. Otherwise this pin will be driven by the ANA2 DCDC	Analog is isolated. Digital I/O cell is also isolated.	Determined by the I/O cell state, like other digital I/Os.
50	Generic Input/Output	Analog is isolated. Digital I/O cell is also isolated.	Determined by the I/O cell state, like other digital I/Os.
52	This pin must have an external pullup of 100K to supply rail. This pin must be used for output only signals.	Analog is isolated. Digital I/O cell is also isolated.	Determined by the I/O cell state, like other digital I/Os.
53	Generic Input/Output	Analog is isolated. Digital I/O cell is also isolated.	Determined by the I/O cell state, like other digital I/Os.
57	Analog signal (1.8-V absolute max. 1.46-V full scale)	ADC is isolated. Digital I/O cell is directly connected but Hi-Z.	Determined by the I/O cell state, like other digital I/Os.

Copyright © 2017, Texas Instruments Incorporated

Table 16-5. Board Level Behavior (continued)

Board Level Behavior			
58	Analog signal (1.8-V absolute max. 1.46-V full scale)	ADC is isolated. Digital I/O cell is directly connected but Hi-Z.	Determined by the I/O cell state, like other digital I/Os.
59	Analog signal (1.8-V absolute max. 1.46-V full scale)	ADC is isolated. Digital I/O cell is directly connected but Hi-Z.	Determined by the I/O cell state, like other digital I/Os.
60	Analog signal (1.8-V absolute max. 1.46-V full scale)	ADC is isolated. Digital I/O cell is directly connected but Hi-Z.	Determined by the I/O cell state, like other digital I/Os.

16.6 Pins Available for Applications

Table 16-6 shows the pins available for application signals under various board level configurations.

Table 16-6. GPIO/Pins Available for Application

Pkg Pin	Name	Pins That Can be Used by Application Using 40MHz XTAL Yes = 1				Pins That Can be Used by APplication Using 40MHz TCXO (For Full Industrial Temp Range) Yes = 1			
		4-Wire JTAG SOP[2:0] = "000" with 32-KHz XTAL	2-Wire JTAG SOP[2:0] = "001" with 32-KHz XTAL	4-Wire JTAG SOP[2:0] = "000" with external 32 KHz	2-Wire JTAG SOP[2:0] = "001" with external 32 KHz	4-Wire JTAG SOP[2:0] = "000" with 32-KHz XTAL	2-Wire JTAG SOP[2:0] = "001" with 32-KHz XTAL	4-Wire JTAG SOP[2:0] = "000" with external 32-KHz XTAL	2-Wire JTAG SOP[2:0] = "001" with external 32-KHz XTAL
1	GPIO10	1	1	1	1	1	1	1	1
2	GPIO11	1	1	1	1	1	1	1	1
3	GPIO12	1	1	1	1	1	1	1	1
4	GPIO13	1	1	1	1	1	1	1	1
5	GPIO14	1	1	1	1	1	1	1	1
6	GPIO15	1	1	1	1	1	1	1	1
7	GPIO16	1	1	1	1	1	1	1	1
8	GPIO17	1	1	1	1	1	1	1	1
9	VDD_DIG1								
10	VIN_IO1								
11	FLASH_SPI_CLK								
12	FLASH_SPI_DOUT								
13	FLASH_SPI_DIN								
14	FLASH_SPI_CS								
15	GPIO22	1	1	1	1	1	1	1	1
16	TDI		1		1		1		1
17	TDO		1		1		1		1
18	GPIO28	1	1	1	1	1	1	1	1
19	TCK								
20	TMS								
21	SOP2	1	1	1	1	0 (TCXO_EN)	0 (TCXO_EN)	0 (TCXO_EN)	0 (TCXO_EN)

Copyright © 2017, Texas Instruments Incorporated

Table 16-6. GPIO/Pins Available for Application (continued)

Pkg Pin	Name	Pins That Can be Used by Application Using 40MHz XTAL Yes = 1				Pins That Can be Used by APplication Using 40MHz TCXO (For Full Industrial Temp Range) Yes = 1			
		4-Wire JTAG SOP[2:0] = "000" with 32-KHz XTAL	2-Wire JTAG SOP[2:0] = "001" with 32-KHz XTAL	4-Wire JTAG SOP[2:0] = "000" with external 32 KHz	2-Wire JTAG SOP[2:0] = "001" with external 32 KHz	4-Wire JTAG SOP[2:0] = "000" with 32-KHz XTAL	2-Wire JTAG SOP[2:0] = "001" with 32-KHz XTAL	4-Wire JTAG SOP[2:0] = "000" with external 32-KHz XTAL	2-Wire JTAG SOP[2:0] = "001" with external 32-KHz XTAL
22	WLAN_XTAL_N			0	0			1	1
23	WLAN_XTAL_P								
24	VDD_PLL								
25	LDO_IN2								
26	NC								
27	NC								
28	NC								
29	ANTSEL1								
30	ANTSEL2								
31	RF_BG								
32	nRESET								
33	VDD_PA_IN								
34	SOP1								
35	SOP0								
36	LDO_IN1								
37	VIN_DCDC_ANA								
38	DCDC_ANA_SW								
39	VIN_DCDC_PA								
40	DCDC_PA_SW_P								
41	DCDC_PA_SW_N								
42	DCDC_PA_OUT								
43	DCDC_DIG_SW								
44	VIN_DCDC_DIG								
45	DCDC_ANA2_SW_P								
46	DCDC_ANA2_SW_N								
47	VDD_ANA2								
48	VDD_ANA1								
49	VDD_RAM								
50	GPIO0	1	1	1	1	1	1	1	1

Copyright © 2017, Texas Instruments Incorporated

Table 16-6. GPIO/Pins Available for Application (continued)

Pkg Pin	Name	Pins That Can be Used by Application Using 40MHz XTAL Yes = 1				Pins That Can be Used by APplication Using 40MHz TCXO (For Full Industrial Temp Range) Yes = 1			
		4-Wire JTAG SOP[2:0] = "000" with 32-KHz XTAL	2-Wire JTAG SOP[2:0] = "001" with 32-KHz XTAL	4-Wire JTAG SOP[2:0] = "000" with external 32 KHz	2-Wire JTAG SOP[2:0] = "001" with external 32 KHz	4-Wire JTAG SOP[2:0] = "000" with 32-KHz XTAL	2-Wire JTAG SOP[2:0] = "001" with 32-KHz XTAL	4-Wire JTAG SOP[2:0] = "000" with external 32-KHz XTAL	2-Wire JTAG SOP[2:0] = "001" with external 32-KHz XTAL
51	RTC_XTAL_P								
52	RTC_XTAL_N	0	0	1	1	1	1	1	1
53	GPIO30	1	1	1	1	1	1	1	1
54	VIN_IO2								
55	GPIO1	1	1	1	1	1	1	1	1
56	VDD_DIG2								
57	GPIO2	1	1	1	1	1	1	1	1
58	GPIO3	1	1	1	1	1	1	1	1
59	GPIO4	1	1	1	1	1	1	1	1
60	GPIO5	1	1	1	1	1	1	1	1
61	GPIO6	1	1	1	1	1	1	1	1
62	GPIO7	1	1	1	1	1	1	1	1
63	GPIO8	1	1	1	1	1	1	1	1
64	GPIO9	1	1	1	1	1	1	1	1
65	GND (THERMAL PAD)								
Total available for application		22	24	23	25	22	24	23	25

16.7 Functional Pin Mux Configurations

Pin mux configurations supported in the CC32xx are listed in Table 16-7.

Copyright © 2017, Texas Instruments Incorporated

Table 16-7. Pin Multiplexing

General Pin Attributes						Function					Pad States		
Pkg Pin	Pin Alias	Use	Select as Wakeup Source	Config Addl Analog Mux	Muxed with JTAG	Dig. Pin Mux Config Reg	Dig. Pin Mux Config Mode Value	Signal Name	Signal Description	Signal Direction	LPDS[1]	Hib[2]	nRESET = 0
1	GPIO10	I/O	No	No	No	GPIO_PAD_CONFIG_10 (0x4402 E0C8)	0	GPIO10	General-Purpose I/O	I/O	Hi-Z	Hi-Z	Hi-Z
							1	I2C_SCL	I2C Clock	O (Open Drain)	Hi-Z		
							3	GT_PWM06	Pulse-Width Modulated O/P	O	Hi-Z		
							7	UART1_TX	UART TX Data	O	1		
							6	SDCARD_CLK	SD Card Clock	O	0		
							12	GT_CCP01	Timer Capture Port	I	Hi-Z		
2	GPIO11	I/O	Yes	No	No	GPIO_PAD_CONFIG_11 (0x4402 E0CC)	0	GPIO11	General-Purpose I/O	I/O	Hi-Z	Hi-Z	Hi-Z
							1	I2C_SDA	I2C Data	I/O (Open Drain)	Hi-Z		
							3	GT_PWM07	Pulse-Width Modulated O/P	O	Hi-Z		
							4	pXCLK (XVCLK)	Free Clock To Parallel Camera	O	0		
							6	SDCARD_CMD	SD Card Command Line	I/O	Hi-Z		
							7	UART1_RX	UART RX Data	I	Hi-Z		
							12	GT_CCP02	Timer Capture Port	I	Hi-Z		
							13	McAFSX	I2S Audio Port Frame Sync	O	Hi-Z		

(1) LPDS mode: The state of unused GPIOs in LPDS is input with 500-kΩ pulldown. For all used GPIOs , the user can enable internal pulls, which would hold them in a valid state.

(2) Hibernate mode: The CC32xx device leaves the digital pins in a Hi-Z state without any internal pulls when the device enters hibernate state. This can cause glitches on output lines, unless held at valid levels by external resistors.

Copyright © 2017, Texas Instruments Incorporated

Table 16-7. Pin Multiplexing (continued)

General Pin Attributes						Function					Pad States		
Pkg Pin	Pin Alias	Use	Select as Wakeup Source	Config Addl Analog Mux	Muxed with JTAG	Dig. Pin Mux Config Reg	Dig. Pin Mux Config Mode Value	Signal Name	Signal Description	Signal Direction	LPDS[1]	Hib[2]	nRESET = 0
3	GPIO12	I/O	No	No	No	GPIO_PAD_CONFIG_12 (0x4402 E0D0)	0	GPIO12	General Purpose I/O	I/O	Hi-Z	Hi-Z	Hi-Z
							3	McACLK	I2S Audio Port Clock O	O	Hi-Z		
							4	pVS (VSYNC)	Parallel Camera Vertical Sync	I	Hi-Z		
							5	I2C_SCL	I2C Clock	I/O (Open Drain)	Hi-Z		
							7	UART0_TX	UART0 TX Data	O	1		
							12	GT_CCP03	Timer Capture Port	I	Hi-Z		
4	GPIO13	I/O	Yes	No	No	GPIO_PAD_CONFIG_13 (0x4402 E0D4)	0	GPIO13	General-Purpose I/O	I/O	Hi-Z	Hi-Z	Hi-Z
							5	I2C_SDA	I2C Data	I/O (Open Drain)			
							4	pHS (HSYNC)	Parallel Camera Horizontal Sync	I			
							7	UART0_RX	UART0 RX Data	I			
							12	GT_CCP04	Timer Capture Port	I			
5	GPIO14	I/O		No	No	GPIO_PAD_CONFIG_14 (0x4402 E0D8)	0	GPIO14	General-Purpose I/O	I/O	Hi-Z	Hi-Z	Hi-Z
							5	I2C_SCL	I2C Clock	I/O (Open Drain)			
							7	GSPI_CLK	General SPI Clock	I/O			
							4	pDATA8 (CAM_D4)	Parallel Camera Data Bit 4	I			
							12	GT_CCP05	Timer Capture Port	I			

Copyright © 2017, Texas Instruments Incorporated

Table 16-7. Pin Multiplexing (continued)

General Pin Attributes						Function					Pad States		
Pkg Pin	Pin Alias	Use	Select as Wakeup Source	Config Addl Analog Mux	Muxed with JTAG	Dig. Pin Mux Config Reg	Dig. Pin Mux Config Mode Value	Signal Name	Signal Description	Signal Direction	LPDS[1]	Hib[2]	nRESET = 0
6	GPIO15	I/O		No	No	GPIO_PAD_CONFIG_15 (0x4402 E0DC)	0	GPIO15	General-Purpose I/O	I/O	Hi-Z	Hi-Z	Hi-Z
							5	I2C_SDA	I2C Data	I/O (Open Drain)			
							7	GSPI_MISO	General SPI MISO	I/O			
							4	pDATA9 (CAM_D5)	Parallel Camera Data Bit 5	I			
							8	SDCARD_DATA	SD Card Data	I/O			
							13	GT_CCP06	Timer Capture Port	I			
7	GPIO16	I/O		No	No	GPIO_PAD_CONFIG_16 (0x4402 E0E0)	0	GPIO16	General-Purpose I/O	I/O	Hi-Z	Hi-Z	Hi-Z
											Hi-Z		
											Hi-Z		
							7	GSPI_MOSI	General SPI MOSI	I/O	Hi-Z		
							4	pDATA10 (CAM_D6)	Parallel Camera Data Bit 6	I	Hi-Z		
							5	UART1_TX	UART1 TX Data	O	1		
							8	SDCARD_CLK	SD Card Clock	O	0		
							13	GT_CCP07	Timer Capture Port	I	Hi-Z		
8	GPIO17	I/O	Wake-Up Source	No	No	GPIO_PAD_CONFIG_17 (0x4402 E0E4)	0	GPIO17	General-Purpose I/O	I/O	Hi-Z	Hi-Z	Hi-Z
							5	UART1_RX	UART1 RX Data	I			
							7	GSPI_CS	General SPI Chip Select	I/O			
							8	SDCARD_CMD	SD Card Command Line	I/O			
							4	pDATA11 (CAM_D7)	Parallel Camera Data Bit 7	I			
9	VDD_DIG1	Int pwr	N/A	N/A	N/A	N/A	N/A	VDD_DIG1	Internal Digital Core Voltage				

Copyright © 2017, Texas Instruments Incorporated

Table 16-7. Pin Multiplexing (continued)

General Pin Attributes						Function					Pad States		
Pkg Pin	Pin Alias	Use	Select as Wakeup Source	Config Addl Analog Mux	Muxed with JTAG	Dig. Pin Mux Config Reg	Dig. Pin Mux Config Mode Value	Signal Name	Signal Description	Signal Direction	LPDS[1]	Hib[2]	nRESET = 0
10	VIN_IO1	Sup. input	N/A	N/A	N/A	N/A	N/A	VIN_IO1	Chip Supply Voltage (VBAT)				
11	FLASH_SPI_CLK	O	N/A	N/A	N/A	N/A	N/A	FLASH_SPI_CLK	Clock To SPI Serial Flash (Fixed Default)	O	Hi-Z	Hi-Z	Hi-Z
12	FLASH_SPI_DOUT	O	N/A	N/A	N/A	N/A	N/A	FLASH_SPI_DOUT	Data To SPI Serial Flash (Fixed Default)	O	Hi-Z	Hi-Z	Hi-Z
13	FLASH_SPI_DIN	I	N/A	N/A	N/A	N/A	N/A	FLASH_SPI_DIN	Data From SPI Serial Flash (Fixed Default)	I			
14	FLASH_SPI_CS	O	N/A	N/A	N/A	N/A	N/A	FLASH_SPI_CS	Chip Select To SPI Serial Flash (Fixed Default)	O	1	Hi-Z	Hi-Z
15	GPIO22	I/O	No	No	No	GPIO_PAD_CONFIG_22 (0x4402 E0F8)	0	GPIO22	General-Purpose I/O	I/O	Hi-Z	Hi-Z	Hi-Z
							7	McAFSX	I2S Audio Port Frame Sync	O	Hi-Z		
							5	GT_CCP04	Timer Capture Port	I			
16	TDI	I/O	No	No	MUXed with JTAG TDI	GPIO_PAD_CONFIG_23 (0x4402 E0FC)	1	TDI	JTAG TDI. Reset Default Pinout.	I	Hi-Z	Hi-Z	Hi-Z
							0	GPIO23	General-Purpose I/O	I/O			
							2	UART1_TX	UART1 TX Data	O	1		
							9	I2C_SCL	I2C Clock	I/O (Open Drain)	Hi-Z		

Copyright © 2017, Texas Instruments Incorporated

Table 16-7. Pin Multiplexing (continued)

General Pin Attributes						Function					Pad States		
Pkg Pin	Pin Alias	Use	Select as Wakeup Source	Config Addl Analog Mux	Muxed with JTAG	Dig. Pin Mux Config Reg	Dig. Pin Mux Config Mode Value	Signal Name	Signal Description	Signal Direction	LPDS[1]	Hib[2]	nRESET = 0
17	TDO	I/O	Wake-up source	No	MUXed with JTAG TDO	GPIO_PAD_CONFIG_24 (0x4402 E100)	1	TDO	JTAG TDO. Reset Default Pinout.	O	Hi-Z	Hi-Z	Hi-Z
							0	GPIO24	General-Purpose I/O	I/O			
							5	PWM0	Pulse Width Modulated O/P	O			
							2	UART1_RX	UART1 RX Data	I			
							9	I2C_SDA	I2C Data	I/O (Open Drain)			
							4	GT_CCP06	Timer Capture Port	I			
							6	McAFSX	I2S Audio Port Frame Sync	O			
18	GPIO28	I/O		No		GPIO_PAD_CONFIG_28 (0x4402 E110)	0	GPIO28	General-Purpose I/O	I/O	Hi-Z	Hi-Z	Hi-Z
19	TCK	I/O	No	No	MUXed with JTAG/SWD-TCK		1	TCK	JTAG/SWD TCK Reset Default Pinout	I	Hi-Z	Hi-Z	Hi-Z
							8	GT_PWM03	Pulse Width Modulated O/P	O			
20	TMS	I/O	No	No	MUXed with JTAG/SWD-TMSC	GPIO_PAD_CONFIG_29 (0x4402 E114)	1	TMS	JATG/SWD TMS Reset Default Pinout	I/O	Hi-Z	Hi-Z	Hi-Z
							0	GPIO29	General-Purpose I/O				

Copyright © 2017, Texas Instruments Incorporated

Table 16-7. Pin Multiplexing (continued)

General Pin Attributes						Function					Pad States		
Pkg Pin	Pin Alias	Use	Select as Wakeup Source	Config Addl Analog Mux	Muxed with JTAG	Dig. Pin Mux Config Reg	Dig. Pin Mux Config Mode Value	Signal Name	Signal Description	Signal Direction	LPDS[1]	Hib[2]	nRESET = 0
21	SOP2	O Only	No	No	No	GPIO_PAD_CONFIG_25 (0x4402 E104)	0	GPIO25	General-Purpose I/O	O	Hi-Z	Hi-Z	Hi-Z
							9	GT_PWM02	Pulse Width Modulated O/P	O	Hi-Z		
							2	McAFSX	I2S Audio Port Frame Sync	O	Hi-Z		
							See [3]	TCXO_EN	Enable to Optional External 40-MHz TCXO	O	O		
							See [4]	SOP2	Sense-On-Power 2	I			
22	WLAN_XTAL_N	WLAN Ana.	N/A	N/A	N/A	N/A	See [3]	WLAN_XTAL_N	40-MHz XTAL Pulldown if ext TCXO is used.				
23	WLAN_XTAL_P	WLAN Ana.	N/A	N/A	N/A	N/A		WLAN_XTAL_P	40-MHz XTAL or TCXO clock input				
24	VDD_PLL	Int. Pwr	N/A	N/A	N/A	N/A		VDD_PLL	Internal analog voltage				
25	LDO_IN2	Int. Pwr	N/A	N/A	N/A	N/A		LDO_IN2	Analog RF supply from ANA DC-DC output				
26	NC	WLAN Ana.	N/A	N/A	N/A	N/A		NC	Reserved				
27	NC	WLAN Ana.	N/A	N/A	N/A	N/A		NC	Reserved				
28	NC	WLAN Ana.	N/A	N/A	N/A	N/A		NC	Reserved				
29	ANTSEL1	O Only	No	User config not required	No	GPIO_PAD_CONFIG_26 (0x4402 E108)	0	ANTSEL1	Antenna Selection Control	O	Hi-Z	Hi-Z	Hi-Z
30	ANTSEL2	O Only	No	User config not required	No	GPIO_PAD_CONFIG_27 (0x4402 E10C)	0	ANTSEL2	Antenna Selection Control	O	Hi-Z	Hi-Z	Hi-Z

[3] For details on proper use, see the *Drive Strength and Reset States for Analog-Digital Multiplexed Pins* section of the CC3200 data sheet (SWAS032).

[4] This pin is one of three that must have a passive pullup or pulldown resistor on board to configure the chip hardware power-up mode. Because of this, if this pin is used for digital functions, it must be output only.

Copyright © 2017, Texas Instruments Incorporated

Table 16-7. Pin Multiplexing (continued)

General Pin Attributes						Function					Pad States		
Pkg Pin	Pin Alias	Use	Select as Wakeup Source	Config Addl Analog Mux	Muxed with JTAG	Dig. Pin Mux Config Reg	Dig. Pin Mux Config Mode Value	Signal Name	Signal Description	Signal Direction	LPDS[1]	Hib[2]	nRESET = 0
31	RF_BG	WLAN Ana.	N/A	N/A	N/A	N/A		RF_BG	RF BG band				
32	nRESET	Glob. Rst	N/A	N/A	N/A	N/A		nRESET	Master chip reset. Active low.				
33	VDD_PA_IN	Int. Pwr	N/A	N/A	N/A	N/A		VDD_PA_IN	PA supply voltage from PA DC-DC output.				
34	SOP1	Config Sense	N/A	N/A	N/A	N/A		SOP1	Sense On Power 1				
35	SOP0	Config Sense	N/A	N/A	N/A	N/A		SOP0	Sense On Power 0				
36	LDO_IN1	Internal Power	N/A	N/A	N/A	N/A		LDO_IN1	Analog RF supply from ana DC-DC output				
37	VIN_DCDC_ANA	Supply Input	N/A	N/A	N/A	N/A		VIN_DCDC_ANA	Analog DC-DC input (connected to chip input supply [VBAT])				
38	DCDC_ANA_SW	Internal Power	N/A	N/A	N/A	N/A		DCDC_ANA_SW	Analog DC-DC switching node.				
39	VIN_DCDC_PA	Supply Input	N/A	N/A	N/A	N/A		VIN_DCDC_PA	PA DC-DC input (connected to chip input supply [VBAT])				
40	DCDC_PA_SW_P	Internal Power	N/A	N/A	N/A	N/A		DCDC_PA_SW_P	PA DC-DC switching node				
41	DCDC_PA_SW_N	Internal Power	N/A	N/A	N/A	N/A		DCDC_PA_SW_N	PA DC-DC switching node				
42	DCDC_PA_OUT	Internal Power	N/A	N/A	N/A	N/A		DCDC_PA_OUT	PA buck converter output				
43	DCDC_DIG_SW	Internal Power	N/A	N/A	N/A	N/A		DCDC_DIG_SW	DIG DC-DC switching node				
44	VIN_DCDC_DIG	Supply Input	N/A	N/A	N/A	N/A		VIN_DCDC_DIG	DIG DC-DC input (connected to chip input supply [VBAT])				

Copyright © 2017, Texas Instruments Incorporated

Table 16-7. Pin Multiplexing (continued)

General Pin Attributes						Function					Pad States		
Pkg Pin	Pin Alias	Use	Select as Wakeup Source	Config Addl Analog Mux	Muxed with JTAG	Dig. Pin Mux Config Reg	Dig. Pin Mux Config Mode Value	Signal Name	Signal Description	Signal Direction	LPDS[1]	Hib[2]	nRESET = 0
45[5]	DCDC_ANA2_SW_P	I/O	No	User config not required [6][7]	No	GPIO_PAD_CONFIG_31 (0x4402 E11C)	0	GPIO31	General-Purpose I/O	I/O	Hi-Z	Hi-Z	Hi-Z
							9	UART0_RX	UART0 RX Data	I			
							12	McAFSX	I2S Audio Port Frame Sync	O			
							2	UART1_RX	UART1 RX Data	I			
							6	McAXR0	I2S Audio Port Data 0 (RX/TX)	I/O			
							7	GSPI_CLK	General SPI Clock	I/O			
							See [8]	DCDC_ANA2_SW_P	ANA2 DC-DC Converter +ve Switching Node.				
46	DCDC_ANA2_SW_N	Internal Power	N/A	N/A	N/A	N/A	N/A	DCDC_ANA2_SW_N	ANA2 DC-DC Converter -ve Switching Node.				
47	VDD_ANA2	Internal Power	N/A	N/A	N/A	N/A	N/A	VDD_ANA2	ANA2 DC-DC O				
48	VDD_ANA1	Internal Power	N/A	N/A	N/A	N/A	N/A	VDD_ANA1	Analog supply fed by ANA2 DC-DC output				
49	VDD_RAM	Internal Power	N/A	N/A	N/A	N/A	N/A	VDD_RAM	SRAM LDO output				

(5) Pin 45 is used by an internal DC-DC (ANA2_DCDC) and pin 52 is used by the RTC XTAL oscillator. These modules use automatic configuration sensing. Therefore, some board-level configuration is required to use pin 45 and pin 52 as digital pads (see Figure 16-2). Because the CC32xxR device does not require ANA2_DCDC, the pin can always be used for digital functions. However, pin 47 must be shorted to the supply input. Typically, pin 52 is used for RTC XTAL in most applications. However, in some applications, a 32.768-kHz square-wave clock might always be available onboard. In such cases, the XTAL can be removed to free up pin 52 for digital functions. The external clock must then be applied at pin 51. For the chip to automatically detect this configuration, a 100K pullup resistor must be connected between pin 52 and the supply line. To prevent false detection, TI recommends using pin 52 for output-only functions.

(6) Device firmware automatically enables the digital path during ROM boot.

(7) VDD_FLASH must be shorted to V_{supply}.

(8) For details on proper use, see the *Drive Strength and Reset States for Analog-Digital Multiplexed Pins* section of the CC3200 data sheet (SWAS032).

Copyright © 2017, Texas Instruments Incorporated

Table 16-7. Pin Multiplexing (continued)

General Pin Attributes						Function					Pad States		
Pkg Pin	Pin Alias	Use	Select as Wakeup Source	Config Addl Analog Mux	Muxed with JTAG	Dig. Pin Mux Config Reg	Dig. Pin Mux Config Mode Value	Signal Name	Signal Description	Signal Direction	LPDS[1]	Hib[2]	nRESET = 0
50	GPIO0	I/O	No	User config not required	No	GPIO_PAD_CONFIG_0 (0x4402 E0A0)	0	GPIO0	General-Purpose I/O	I/O	Hi-Z	Hi-Z	Hi-Z
							12	UART0_CTS	UART0 Clear To Send Input (Active Low)	I	Hi-Z	Hi-Z	Hi-Z
							6	McAXR1	I2S Audio Port Data 1 (RX/TX)	I/O	Hi-Z		
							7	GT_CCP00	Timer Capture Port	I	Hi-Z		
							9	GSPI_CS	General SPI Chip Select	I/O	Hi-Z		
							10	UART1_RTS	UART1 Request To Send O (Active Low)	O	1		
							3	UART0_RTS	UART0 Request To Send O (Active Low)	O	1		
							4	McAXR0	I2S Audio Port Data 0 (RX/TX)	I/O	Hi-Z		
51	RTC_XTAL_P	RTC Clock	N/A	N/A	N/A	N/A		RTC_XTAL_P	Connect 32.768-kHz XTAL or Froce external CMOS level clock				

Copyright © 2017, Texas Instruments Incorporated

Table 16-7. Pin Multiplexing (continued)

General Pin Attributes						Function					Pad States		
Pkg Pin	Pin Alias	Use	Select as Wakeup Source	Config Addl Analog Mux	Muxed with JTAG	Dig. Pin Mux Config Reg	Dig. Pin Mux Config Mode Value	Signal Name	Signal Description	Signal Direction	LPDS[1]	Hib[2]	nRESET = 0
52[9]	RTC_XTAL_N	O Only		User config not required [10][11]	No	GPIO_PAD_CONFIG_32 (0x4402 E120)		RTC_XTAL_N	Connect 32.768-kHz XTAL or connect a 100-kΩ to V_{supply}.			Hi-Z	Hi-Z
							0	GPIO32	General-Purpose I/O	I/O	Hi-Z		
							2	McACLK	I2S Audio Port Clock O	O	Hi-Z		
							4	McAXR0	I2S Audio Port Data (Only O Mode Supported On Pin 52)	O	Hi-Z		
							6	UART0_RTS	UART0 Request To Send O (Active Low)	O	1		
							8	GSPI_MOSI	General SPI MOSI	I/O	Hi-Z		
53	GPIO30	I/O	No	User config not required [10]	No	GPIO_PAD_CONFIG_30 (0x4402 E118)	0	GPIO30	General-Purpose I/O	I/O	Hi-Z	Hi-Z	Hi-Z
							9	UART0_TX	UART0 TX Data	O	1		
							2	McACLK	I2S Audio Port Clock O	O	Hi-Z		
							3	McAFSX	I2S Audio Port Frame Sync	O	Hi-Z		
							4	GT_CCP05	Timer Capture Port	I	Hi-Z		
							7	GSPI_MISO	General SPI MISO	I/O	Hi-Z		
54	VIN_IO2	Supply Input	N/A	N/A	N/A	N/A		VIN_IO2	Chip Supply Voltage (VBAT)				

(9) Pin 45 is used by an internal DC-DC (ANA2_DCDC) and pin 52 is used by the RTC XTAL oscillator. These modules use automatic configuration sensing. Therefore, some board-level configuration is required to use pin 45 and pin 52 as digital pads (see Figure 16-2). Because the CC32xxR device does not require ANA2_DCDC, the pin can always be used for digital functions. However, pin 47 must be shorted to the supply input. Typically, pin 52 is used for RTC XTAL in most applications. However, in some applications, a 32.768-kHz square-wave clock might always be available onboard. In such cases, the XTAL can be removed to free up pin 52 for digital functions. The external clock must then be applied at pin 51. For the chip to automatically detect this configuration, a 100K pullup resistor must be connected between pin 52 and the supply line. To prevent false detection, TI recommends using pin 52 for output-only functions.

(10) Device firmware automatically enables the digital path during ROM boot.

(11) To use the digital functions, RTC_XTAL_N must be pulled high to V_{supply} using a 100-KΩ resistor

Copyright © 2017, Texas Instruments Incorporated

Table 16-7. Pin Multiplexing (continued)

General Pin Attributes						Function					Pad States		
Pkg Pin	Pin Alias	Use	Select as Wakeup Source	Config Addl Analog Mux	Muxed with JTAG	Dig. Pin Mux Config Reg	Dig. Pin Mux Config Mode Value	Signal Name	Signal Description	Signal Direction	LPDS[1]	Hib[2]	nRESET = 0
55	GPIO1	I/O	No	No	No	GPIO_PAD_CONFIG_1 (0x4402 E0A4)	0	GPIO1	General-Purpose I/O	I/O	Hi-Z	Hi-Z	Hi-Z
							3	UART0_TX	UART0 TX Data	O	1		
							4	pCLK (PIXCLK)	Pixel Clock From Parallel Camera Sensor	I	Hi-Z		
							6	UART1_TX	UART1 TX Data	O	1		
							7	GT_CCP01	Timer Capture Port	I	Hi-Z		
56	VDD_DIG2	Internal Power	N/A	N/A	N/A	N/A		VDD_DIG2	Internal Digital Core Voltage				
57[12]	GPIO2	Analog Input (up to 1.5 V)/ Digital I/O	Wake-Up Source	See [13][14]	No	GPIO_PAD_CONFIG_2 (0x4402 E0A8)	See [15]	ADC_CH0	ADC Channel 0 Input (1.5 V max)	I		Hi-Z	Hi-Z
							0	GPIO2	General-Purpose I/O	I/O	Hi-Z		
							3	UART0_RX	UART0 RX Data	I	Hi-Z		
							6	UART1_RX	UART1 RXt Data	I	Hi-Z		
							7	GT_CCP02	Timer Capture Port	I	Hi-Z		

(12) This pin is shared by the ADC inputs and digital I/O pad cells. Important: The ADC inputs are tolerant up to 1.8 V. On the other hand, the digital pads can tolerate up to 3.6 V. Hence, care must be taken to prevent accidental damage to the ADC inputs. TI recommends that the output buffers of the digital I/Os corresponding to the desired ADC channel be disabled first (that is, converted to high-impedance state), and thereafter the respective pass switches (S7, S8, S9, S10) should be enabled. See the *Drive Strength and Reset States for Analog-Digital Multiplexed Pins* section of the CC3200 data sheet (SWAS032).

(13) Pin 45 is used by an internal DC-DC (ANA2_DCDC) and pin 52 is used by the RTC XTAL oscillator. These modules use automatic configuration sensing. Therefore, some board-level configuration is required to use pin 45 and pin 52 as digital pads (see Figure 16-2). Because the CC32xxR device does not require ANA2_DCDC, the pin can always be used for digital functions. However, pin 47 must be shorted to the supply input. Typically, pin 52 is used for RTC XTAL in most applications. However, in some applications, a 32.768-kHz square-wave clock might always be available onboard. In such cases, the XTAL can be removed to free up pin 52 for digital functions. The external clock must then be applied at pin 51. For the chip to automatically detect this configuration, a 100K pullup resistor must be connected between pin 52 and the supply line. To prevent false detection, TI recommends using pin 52 for output-only functions.

(14) Requires user configuration to enable the ADC channel analog switch. (The switch is off by default.) The digital I/O is always connected, and must be made Hi-Z before enabling the ADC switch.

(15) For details on proper use, see the *Drive Strength and Reset States for Analog-Digital Multiplexed Pins* section of the CC3200 data sheet (SWAS032).

Copyright © 2017, Texas Instruments Incorporated

Table 16-7. Pin Multiplexing (continued)

General Pin Attributes						Function					Pad States		
Pkg Pin	Pin Alias	Use	Select as Wakeup Source	Config Addl Analog Mux	Muxed with JTAG	Dig. Pin Mux Config Reg	Dig. Pin Mux Config Mode Value	Signal Name	Signal Description	Signal Direction	LPDS[1]	Hib[2]	nRESET = 0
58[16]	GPIO3	Analog Input (up to 1.5 V)/Digital I/O.	No	See [17][18]	No	GPIO_PAD_CONFIG_3 (0x4402 E0AC)	See [19]	ADC_CH1	ADC Channel 1 Input (1.5 V max)	I		Hi-Z	Hi-Z
							0	GPIO3	General-Purpose I/O	I/O	Hi-Z		
							6	UART1_TX	UART1 TX Data	O	1		
							4	pDATA7 (CAM_D3)	Parallel Camera Data Bit 3	I	Hi-Z		
59[16]	GPIO4	Analog Input (up to 1.5 V)/Digital I/O.	Wake-up Source	See [17][18]	No	GPIO_PAD_CONFIG_4 (0x4402 E0B0)	See [19]	ADC_CH2	ADC Channel 2 Input (1.4 V max)	I		Hi-Z	Hi-Z
							0	GPIO4	General-Purpose I/O	I/O	Hi-Z		
							6	UART1_RX	UART1 RX Data	I	Hi-Z		
							4	pDATA6 (CAM_D2)	Parallel Camera Data Bit 2	I	Hi-Z		
60[16]	GPIO5	Analog Input (up to 1.5 V)/Digital I/O.	No	See [17][18]	No	GPIO_PAD_CONFIG_5 (0x4402 E0B4)	See [19]	ADC_CH3	ADC Channel 3 Input (1.4 V max)	I		Hi-Z	Hi-Z
							0	GPIO5	General-Purpose I/O	I/O	Hi-Z		
							4	pDATA5 (CAM_D1)	Parallel Camera Data Bit 1	I	Hi-Z		
							6	McAXR1	I2S Audio Port Data 1 (RX/TX)	I/O	Hi-Z		
							7	GT_CCP05	Timer Capture Port	I	Hi-Z		

(16) This pin is shared by the ADC inputs and digital I/O pad cells. Important: The ADC inputs are tolerant up to 1.8 V. On the other hand, the digital pads can tolerate up to 3.6 V. Hence, care must be taken to prevent accidental damage to the ADC inputs. TI recommends that the output buffers of the digital I/Os corresponding to the desired ADC channel be disabled first (that is, converted to high-impedance state), and thereafter the respective pass switches (S7, S8, S9, S10) should be enabled. See the *Drive Strength and Reset States for Analog-Digital Multiplexed Pins* section of the CC3200 data sheet (SWAS032).

(17) Pin 45 is used by an internal DC-DC (ANA2_DCDC) and pin 52 is used by the RTC XTAL oscillator. These modules use automatic configuration sensing. Therefore, some board-level configuration is required to use pin 45 and pin 52 as digital pads (see Figure 16-2). Because the CC32xxR device does not require ANA2_DCDC, the pin can always be used for digital functions. However, pin 47 must be shorted to the supply input. Typically, pin 52 is used for RTC XTAL in most applications. However, in some applications, a 32.768-kHz square-wave clock might always be available onboard. In such cases, the XTAL can be removed to free up pin 52 for digital functions. The external clock must then be applied at pin 51. For the chip to automatically detect this configuration, a 100K pullup resistor must be connected between pin 52 and the supply line. To prevent false detection, TI recommends using pin 52 for output-only functions.

(18) Requires user configuration to enable the ADC channel analog switch. (The switch is off by default.) The digital I/O is always connected, and must be made Hi-Z before enabling the ADC switch.

(19) For details on proper use, see the *Drive Strength and Reset States for Analog-Digital Multiplexed Pins* section of the CC3200 data sheet (SWAS032).

Copyright © 2017, Texas Instruments Incorporated

Table 16-7. Pin Multiplexing (continued)

General Pin Attributes						Function					Pad States		
Pkg Pin	Pin Alias	Use	Select as Wakeup Source	Config Addl Analog Mux	Muxed with JTAG	Dig. Pin Mux Config Reg	Dig. Pin Mux Config Mode Value	Signal Name	Signal Description	Signal Direction	LPDS[1]	Hib[2]	nRESET = 0
61	GPIO6	No	No	No	No	GPIO_PAD_CONFIG_6 (0x4402 E0B8)	0	GPIO6	General-Purpose I/O	I/O	Hi-Z	Hi-Z	Hi-Z
							5	UART0_RTS	UART0 Request To Send O (Active Low)	O	1		
							4	pDATA4 (CAM_D0)	Parallel Camera Data Bit 0	I	Hi-Z		
							3	UART1_CTS	UART1 Clear To Send Input (Active Low)	I	Hi-Z		
							6	UART0_CTS	UART0 Clear To Send Input (Active Low)	I	Hi-Z		
							7	GT_CCP06	Timer Capture Port	I	Hi-Z		
62	GPIO7	I/O	No	No	No	GPIO_PAD_CONFIG_7 (0x4402 E0BC)	0	GPIO7	General-Purpose I/O	I/O	Hi-Z	Hi-Z	Hi-Z
							13	McACLKX	I2S Audio Port Clock O	O	Hi-Z		
							3	UART1_RTS	UART1 Request To Send O (Active Low)	O	1		
							10	UART0_RTS	UART0 Request To Send O (Active Low)	O	1		
							11	UART0_TX	UART0 TX Data	O	1		
63	GPIO8	I/O	No	No	No	GPIO_PAD_CONFIG_8 (0x4402 E0C0)	0	GPIO8	General-Purpose I/O	I/O	Hi-Z	Hi-Z	Hi-Z
							6	SDCARD_IRQ	Interrupt from SD Card (Future support)	I			
							7	McAFSX	I2S Audio Port Frame Sync	O			
							12	GT_CCP06	Timer Capture Port	I			

Copyright © 2017, Texas Instruments Incorporated

Table 16-7. Pin Multiplexing (continued)

General Pin Attributes						Function					Pad States		
Pkg Pin	Pin Alias	Use	Select as Wakeup Source	Config Addl Analog Mux	Muxed with JTAG	Dig. Pin Mux Config Reg	Dig. Pin Mux Config Mode Value	Signal Name	Signal Description	Signal Direction	LPDS[1]	Hib[2]	nRESET = 0
64	GPIO9	I/O	No	No	No	GPIO_PAD_CONFIG_9 (0x4402 E0C4)	0	GPIO9	General-Purpose I/O	I/O	Hi-Z	Hi-Z	Hi-Z
							3	GT_PWM05	Pulse Width Modulated O/P	O			
							6	SDCARD_DATA	SD Cad Data	I/O			
							7	McAXR0	I2S Audio Port Data (Rx/Tx)	I/O			
							12	GT_CCP00	Timer Capture Port	I			
65	GND_TAB								Thermal pad and electrical ground				

16.8 Pin Mapping Recommendations

For certain high speed interfaces, TI recommends using the following pin groups.

Recommended pin groups for I2S:

Copyright © 2017, Texas Instruments Incorporated

Table 16-8. Pin Groups for I2S

Audio Interface (I2S)			
Signal	**Pin Group #1**	**Pin Group #2**	**Pin Group #3**
Data 0	45	64	52 (Tx Only)
Data 1	50	50	50
Clock	53	62	53
Frame Sync	63	63	45

Recommended pin groups for SPI:

Table 16-9. Pin Groups for SPI

SPI Interface (GSPI)		
Signal	**Supported Pin Group #1**	**Supported Pin Group #2**
MOSI	7	52
MISO	6	53
CLK	5	45
CS	8	50

Recommended pin groups for SD-Card I/F:

Table 16-10. Pin Groups for SD-Card I/F

SD Card Master (1 bit Mode) Interface		
Signal	**Pin Group #1**	**Pin Group #2**
CLK	1 (GPIO_10)	7 (GPIO_16)
CMD	2 (GPIO_11)	8 (GPIO_17)
DATA	64 (GPIO_09)	6 (GPIO_15)
IRQ (Future Support)	63 (GPIO_8)	63 (GPIO_8)

Copyright © 2017, Texas Instruments Incorporated

16.8.1 Pad Configuration Registers for Application Pins

Table 16-11 lists the configuration registers associated with the device pins.

Table 16-11. Pad Configuration Registers

Package Pin #	GPIO #[1]	Digital Pad Config Register	Physical Address
50	GPIO0 / (ANA)	GPIO_PAD_CONFIG_0	0x4402 E0A0
55	GPIO1	GPIO_PAD_CONFIG_1	0x4402 E0A4
57	GPIO2	GPIO_PAD_CONFIG_2	0x4402 E0A8
58	GPIO3	GPIO_PAD_CONFIG_3	0x4402 E0AC
59	GPIO4	GPIO_PAD_CONFIG_4	0x4402 E0B0
60	GPIO5	GPIO_PAD_CONFIG_5	0x4402 E0B4
61	GPIO6	GPIO_PAD_CONFIG_6	0x4402 E0B8
62	GPIO7	GPIO_PAD_CONFIG_7	0x4402 E0BC
63	GPIO8	GPIO_PAD_CONFIG_8	0x4402 E0C0
64	GPIO9	GPIO_PAD_CONFIG_9	0x4402 E0C4
1	GPIO10	GPIO_PAD_CONFIG_10	0x4402 E0C8
2	GPIO11	GPIO_PAD_CONFIG_11	0x4402 E0CC
3	GPIO12	GPIO_PAD_CONFIG_12	0x4402 E0D0
4	GPIO13	GPIO_PAD_CONFIG_13	0x4402 E0D4
5	GPIO14	GPIO_PAD_CONFIG_14	0x4402 E0D8
6	GPIO15	GPIO_PAD_CONFIG_15	0x4402 E0DC
7	GPIO16	GPIO_PAD_CONFIG_16	0x4402 E0E0
8	GPIO17	GPIO_PAD_CONFIG_17	0x4402 E0E4
11	GPIO18 (SPI_FLASH_CLK)[2]	GPIO_PAD_CONFIG_18	0x4402 E0E8
12	GPIO19 (SPI_FLASH_DOUT[2]	GPIO_PAD_CONFIG_19	0x4402 E0EC
13	GPIO20 (SPI_FLASH_DIN)[2]	GPIO_PAD_CONFIG_20	0x4402 E0F0
14	GPIO21 (SPI_FLASH_CS)[2]	GPIO_PAD_CONFIG_21	0x4402 E0F4
15	GPIO22	GPIO_PAD_CONFIG_22	0x4402 E0F8
16	GPIO23 (TDI)	GPIO_PAD_CONFIG_23	0x4402 E0FC
17	GPIO24 (TDO)	GPIO_PAD_CONFIG_24	0x4402 E100
18	GPIO28	GPIO_PAD_CONFIG_40	0x4402 E140
19	GPIO28 (TCK)	GPIO_PAD_CONFIG_28	0x4402 E110
21	GPIO25 (SOP2)	GPIO_PAD_CONFIG_25	0x4402 E104
29	GPIO26 (ANTSEL1)	GPIO_PAD_CONFIG_26	0x4402 E108
30	GPIO27 (ANTSEL2)	GPIO_PAD_CONFIG_27	0x4402 E10C
20	GPIO29 (TMS)	GPIO_PAD_CONFIG_29	0x4402 E114
53	GPIO30 (ANA)	GPIO_PAD_CONFIG_30	0x4402 E118
45	GPIO31 (DCDC_ANA2_SW_P)	GPIO_PAD_CONFIG_31	0x4402 E11C
52	GPIO32 (RTC_XTAL_N)	GPIO_PAD_CONFIG_32	0x4402 E120

(1) Pins are referred either by number or by the GPIO mapped to that pin. Functionalities available on a pin are not limited to that name. Refer to the pin-mux table for all possible functional mapping.

(2) These four pins are dedicated for the external SPI serial flash. These cannot be used or shared in any way for other functions.

Copyright © 2017, Texas Instruments Incorporated

16.8.1.1 Pad Mux and Electrical Configuration Register Bit Definitions

16.8.1.1.1 GPIO_PAD_CONFIG_0 to GPIO_PAD_CONFIG_32

Table 16-12. GPIO_PAD_CONFIG_0 to GPIO_PAD_CONFIG_32 Register Description

Bit	Field	Type	Reset	Description
31-12	Reserved	R	0	
11-0	MEM_GPIO_PAD_CONFIG	RW	0xC61	[3:0] CONFMODE. Determines which functional signal is routed to the pad. Refer to the pin mux table. [4] Enable open-drain mode (for example, when used as I2C). [7:5] DRIVESTRENGTH 111 = 14 mA 110 = 12 mA 101 = 10 mA 100 = 8 mA 011 = 6 mA 010 = 4 mA 001 = 2 mA 000 = Output driver not enabled [8] Enable internal weak pullup [9] Enable internal weak pulldown [10] Pad output enable override value. Level enables the pad output buffer. Otherwise, the output buffer is tristated. This does not affect the internal pullup or pulldown, which are controlled independently by bit 8 and bit 9. [11] This enables over-riding of the pad output buffer enable. When this bit is set to logic 1, the value in bit 4 controls the state of the pad output buffer. When this bit is set to logic 0, the state of the pad output buffer is directly controlled by the peripheral module to which the pad is functionally muxed.

16.8.2 PAD Behavior During Reset and Hibernate

By default, all digital pads are Hi-Z during forced reset (nRESET=0) and hibernate. This includes the serial-flash and JTAG pins.

On exit from chip reset or hibernate, the SPI-Flash pads and JTAG pads are configured automatically by the resident ROM firmware during device initialization. The ROM bootloader then reads the application image from the external SPI flash, loads it into SRAM, and makes a jump. At this point all other digital I/Os are in the reset default state (which is Hi-Z). The application code must configure the I/Os. The application code must also configure any associated analog muxes for pins that are shared by both digital and analog or PM functions.

Copyright © 2017, Texas Instruments Incorporated

16.8.3 Control Architecture

The I/O pad data and control path architecture in the CC32xx is shown in Figure 16-3.

Figure 16-3. I/O Pad Data and Control Path Architecture in CC32xx

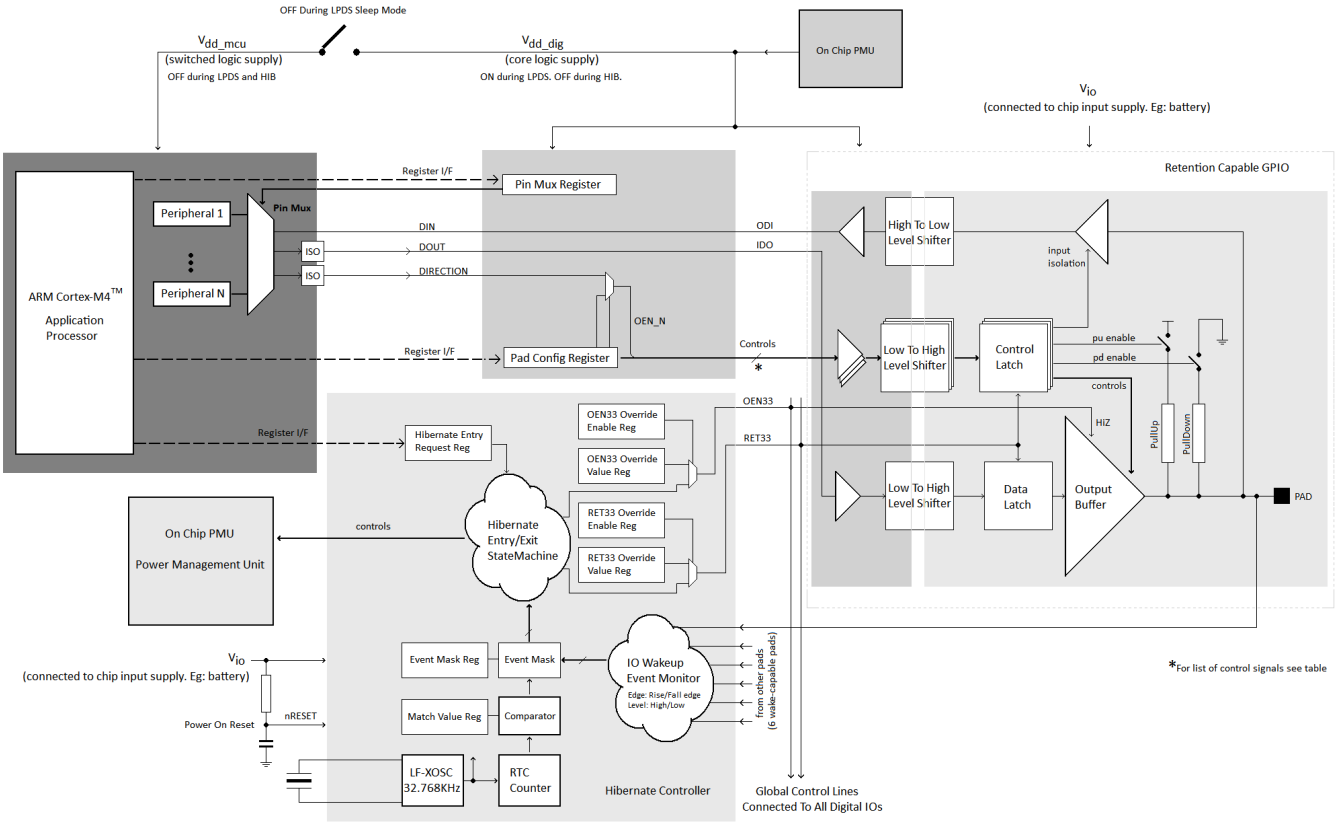

16.8.4 CC32xx Pin-mux Examples

Table 16-13 shows recommended pin-out for several application classes.

Copyright © 2017, Texas Instruments Incorporated

Table 16-13. Recommended Pin Multiplexing Configurations

CC32xx Recommended Pinout Grouping Use – Examples[1]											
	Home Security High-end Toys	Wifi Audio ++ Industrial	Sensor-Tag	Home Security Toys	Wifi Audio ++ Industrial	WiFi Remote w/ 7x7 keypad and audio	Sensor Door-Lock Fire-Alarm Toys w/o Cam	Industrial Home Appliances	Industrial Home Appliances Smart-Plug	Industrial Home Appliances	GPIOs
	External 32 kHz[2]	**External 32 kHz[2]**								**External TCXO 40 MHZ (-40 to +85°C)**	
	Cam + I2S (Tx or Rx) + I2C + SPI + SWD + UART-Tx + (App Logger) 2 GPIO + 1PWM + *4 overlaid wakeup from Hib	I2S (Tx and Rx) + 1 Ch ADC + 1x 4wire UART + 1x 2wire UART + 1bit SD Card + SPI + I2C + SWD + 3 GPIO + 1 PWM + 1 GPIO with Wake-From-Hib	I2S (Tx and Rx) + 2 Ch ADC + 2wire UART + SPI + I2C + SWD + 2 PMW + 6 GPIO + 3 GPIO with Wake-From-Hib	Cam + I2S (Tx or Rx) + I2C + SWD + UART-Tx + (App Logger) 4 GPIO + 1PWM + *4 overlaid wakeup from HIB	I2S (Tx and Rx) + 1 Ch ADC + 2x 2wire UART + 1bit SD Card + SPI + I2C + SWD + 4 GPIO + 1 PWM + 1 GPIO with Wake-From-Hib	I2S (Tx and Rx) + 1 Ch ADC + UART (Tx Only) I2C + SWD + 15 GPIO + 1 PWM + 1 GPIO with Wake-From-Hib	I2S (Tx or Rx) + 2 Ch ADC + 2 wire UART + SPI + I2C + 3 PMW + 3 GPIO with Wake-From-Hib + 5 GPIO SWD +	4 Ch ADC + 1x 4wire UART + 1x 2wire UART + SPI + I2C + SWD + 1 PWM + 6 GPIO + 1 GPIO with Wake-From-Hib Enable for Ext 40 MHz TCXO	3 Ch ADC + 2wire UART + SPI + I2C + SWD + 3 PWM + 9 GPIO + 2 GPIO with Wake-From-Hib	2 Ch ADC + 2wire UART + I2C + SWD + 3 PWM + 11 GPIO + 5 GPIO with Wake-From-Hib	
Pin Number	**Pinout #11**	**Pinout #10**	**Pinout #9**	**Pinout #8**	**Pinout #7**	**Pinout #6**	**Pinout #5**	**Pinout #4**	**Pinout #3**	**Pinout #2**	**Pinout #1**
52	GSPI-MOSI	McASP-D0 (Tx)									GPIO_32 output only
53	GSPI-MISO	MCASP-ACLKX	MCASP-ACLKX	GPIO_30	GPIO_30	GPIO_30	GPIO_30	UART0-TX	GPIO_30	UART0-TX	GPIO_30
45	GSPI-CLK	McASP-AFSX	McASP-D0	GPIO_31	McASP-AFSX	McASP-AFSX	McASP-AFSX	UART0-RX	GPIO_31	UART0-RX	GPIO_31
50	GSPI-CS	McASP-D1 (Rx)	McASP-D1	McASP-D1	McASP-D1	McASP-D1	McASP-D1	UART0-CTS	GPIO_0	GPIO_0	GPIO_0
55	pCLK (PIXCLK)	UART0-TX	UART0-TX	PIXCLK	UART0-TX	UART0-TX	UART0-TX	GPIO-1	UART0-TX	GPIO_1	GPIO_1
57	(wake) GPIO2	UART0-RX	UART0-RX	(wake) GPIO2	UART0-RX	GPIO_2	UART0-RX	ADC-0	UART0-RX	(wake) GPIO_2	(wake) GPIO_2
58	pDATA7 (D3)	UART1-TX	ADC-CH1	pDATA7 (D3)	UART1-TX	GPIO_3	ADC-1	ADC-1	ADC-1	ADC-1	GPIO_3
59	pDATA6 (D2)	UART1-RX	(wake) GPIO_4	pDATA6 (D2)	UART1-RX	GPIO_4	(wake) GPIO_4	ADC-2	ADC-2	(wake) GPIO_4	(wake) GPIO_4
60	pDATA5 (D1)	ADC-3	ADC-3	pDATA5 (D1)	ADC-3	ADC-3	ADC-3	ADC-3	ADC-3	ADC-3	GPIO_5
61	pDATA4 (D0)	UART1-CTS	GPIO_6	pDATA4 (D0)	GPIO_6	GPIO_6	GPIO_6	UART0-RTS	GPIO_6	GPIO_6	GPIO_6

(1) Pins marked "wake" can be configured to wake up the chip from hibernate or LPDS state. In the current silicon revision, any wake pin can trigger wake up from hibernate. The wake-up monitor in the hibernate control module logically ORs these pins applying a selection mask. However, wakeup from LPDS state can be triggered only by one of the wake-up pins that can be configured before entering LPDS. The core digital wake-up monitor uses a mux to select one of these pins to monitor.

(2) The device supports the feeding of an external 32.768-kHz clock. This configuration frees one pin (32K_XTAL_N) to use in output-only mode with a 100K pullup.

Copyright © 2017, Texas Instruments Incorporated

Table 16-13. Recommended Pin Multiplexing Configurations (continued)

CC32xx Recommended Pinout Grouping Use – Examples[1]											
62	McASP-ACLKX	UART1-RTS	GPIO_7	McASP-ACLKX	McASP-ACLKX	McASP-ACLKX	McASP-ACLKX	GPIO_7	GPIO_7	GPIO_7	GPIO_7
63	McASP-AFSX	SDCARD-IRQ	McASP-AFSX	McASP-AFSX	SDCARD-IRQ	GPIO_8	GPIO_8	GPIO_8	GPIO_8	GPIO_8	GPIO_8
64	McASP-D0	SDCARD-DATA	GT_PWM5	McASP-D0	SDCARD-DATA	GPIO_9	GT_PWM5	GT_PWM5	GT_PWM5	GT_PWM5	GPIO_9
1	UART1-TX	SDCARD-CLK	GPIO_10	UART1-TX	SDCARD-CLK	GPIO_10	GT_PWM6	UART1-TX	GT_PWM6	GPIO_10	GPIO_10
2	(wake) pXCLK (XVCLK)	SDCARD-CMD	(wake) GPIO_11	(wake) pXCLK (XVCLK)	SDCARD-CMD	GPIO_11	(wake) GPIO_11	UART1-RX	(wake) GPIO_11	(wake) GPIO_11	(wake) GPIO_11
3	pVS (VSYNC)	I2C-SCL	I2C-SCL	pVS (VSYNC)	I2C-SCL	GPIO_12	I2C-SCL	I2C-SCL	I2C-SCL	GPIO_12	GPIO_12
4	(wake) pHS (HSYNC)	I2C-SDA	I2C-SDA	(wake) pHS (HSYNC)	I2C-SDA	GPIO_13	I2C-SDA	I2C-SDA	I2C-SDA	(wake) GPIO_13	(wake) GPIO_13
5	pDATA8 (D4)	GSPI-CLK	GSPI-CLK	pDATA8 (D4)	GSPI-CLK	I2C-SCL	GSPI-CLK	GSPI-CLK	GSPI-CLK	I2C-SCL	GPIO_14
6	pDATA9 (D5)	GSPI-MISO	GSPI-MISO	pDATA9 (D5)	GSPI-MISO	I2C-SDA	GSPI-MISO	GSPI-MISO	GSPI-MISO	I2C-SDA	GPIO_15
7	pDATA10 (D6)	GSPI-MOSI	GSPI-MOSI	pDATA10 (D6)	GSPI-MOSI	GPIO_16	GSPI-MOSI	GSPI-MOSI	GSPI-MOSI	GPIO_16	GPIO_16
8	(wake) pDATA11 (D7)	GSPI-CS	GSPI-CS	(wake) pDATA11 (D7)	GSPI-CS	GPIO_17	GSPI-CS	GSPI-CS	GSPI-CS	(wake) GPIO_17	(wake) GPIO_17
11	SPI-FLASH_CLK	SPI-FLASH_CLK	SPI-FLASH_CLK	SPI-FLASH_CLK	SPI-FLASH_CLK	SPI-FLASH_CLK	SPI-FLASH_CLK	SPI-FLASH_CLK	SPI-FLASH_CLK	SPI-FLASH_CLK	SPI-FLASH_CLK
12	SPI-FLASH-DOUT	SPI-FLASH-DOUT	SPI-FLASH-DOUT	SPI-FLASH-DOUT	SPI-FLASH-DOUT	SPI-FLASH-DOUT	SPI-FLASH-DOUT	SPI-FLASH-DOUT	SPI-FLASH-DOUT	SPI-FLASH-DOUT	SPI-FLASH-DOUT
13	SPI-FLASH-DIN	SPI-FLASH-DIN	SPI-FLASH-DIN	SPI-FLASH-DIN	SPI-FLASH-DIN	SPI-FLASH-DIN	SPI-FLASH-DIN	SPI-FLASH-DIN	SPI-FLASH-DIN	SPI-FLASH-DIN	SPI-FLASH-DIN
14	SPI-FLASH-CS	SPI-FLASH-CS	SPI-FLASH-CS	SPI-FLASH-CS	SPI-FLASH-CS	SPI-FLASH-CS	SPI-FLASH-CS	SPI-FLASH-CS	SPI-FLASH-CS	SPI-FLASH-CS	SPI-FLASH-CS
15	GPIO_22	GPIO_22	GPIO_22	GPIO_22	GPIO_22	GPIO_22	GPIO_22	GPIO_22	GPIO_22	GPIO_22	GPIO_22
16	I2C-SCL	GPIO_23	GPIO_23	I2C-SCL	GPIO_23	GPIO_23	GPIO_23	GPIO_23	GPIO_23	GPIO_23	GPIO_23
17	I2C-SDA	(wake) GPIO_24	(wake) GPIO_24	I2C-SDA	(wake) GPIO_24	(wake) GPIO_24	(wake) GPIO_24	(wake) GPIO_24	(wake) GPIO_24	GT-PWM0	(wake) GPIO_24
19	SWD-TCK	SWD-TCK	SWD-TCK	SWD-TCK	SWD-TCK	SWD-TCK	SWD-TCK	SWD-TCK	SWD-TCK	SWD-TCK	SWD-TCK
20	SWD-TMS	SWD-TMS	SWD-TMS	SWD-TMS	SWD-TMS	SWD-TMS	SWD-TMS	SWD-TMS	SWD-TMS	SWD-TMS	SWD-TMS
18	GPIO_28	GPIO_28	GPIO_28	GPIO_28	GPIO_28	GPIO_28	GPIO_28	GPIO_28	GPIO_28	GPIO_28	GPIO_28
21	GT_PWM2	GT_PWM2	GT_PWM2	GT_PWM2	GT_PWM2	GT_PWM2	GT_PWM2	TCXO_EN	GT_PWM2	GT_PWM2	GPIO_25 out only

Copyright © 2017, Texas Instruments Incorporated

16.8.5 Wake on Pad

The CC32xx supports wake from hibernate and LPDS on pad events for up to six pins. The implementation for hibernate is shown in Figure 16-4.

Figure 16-4. Wake on Pad for Hibernate Mode

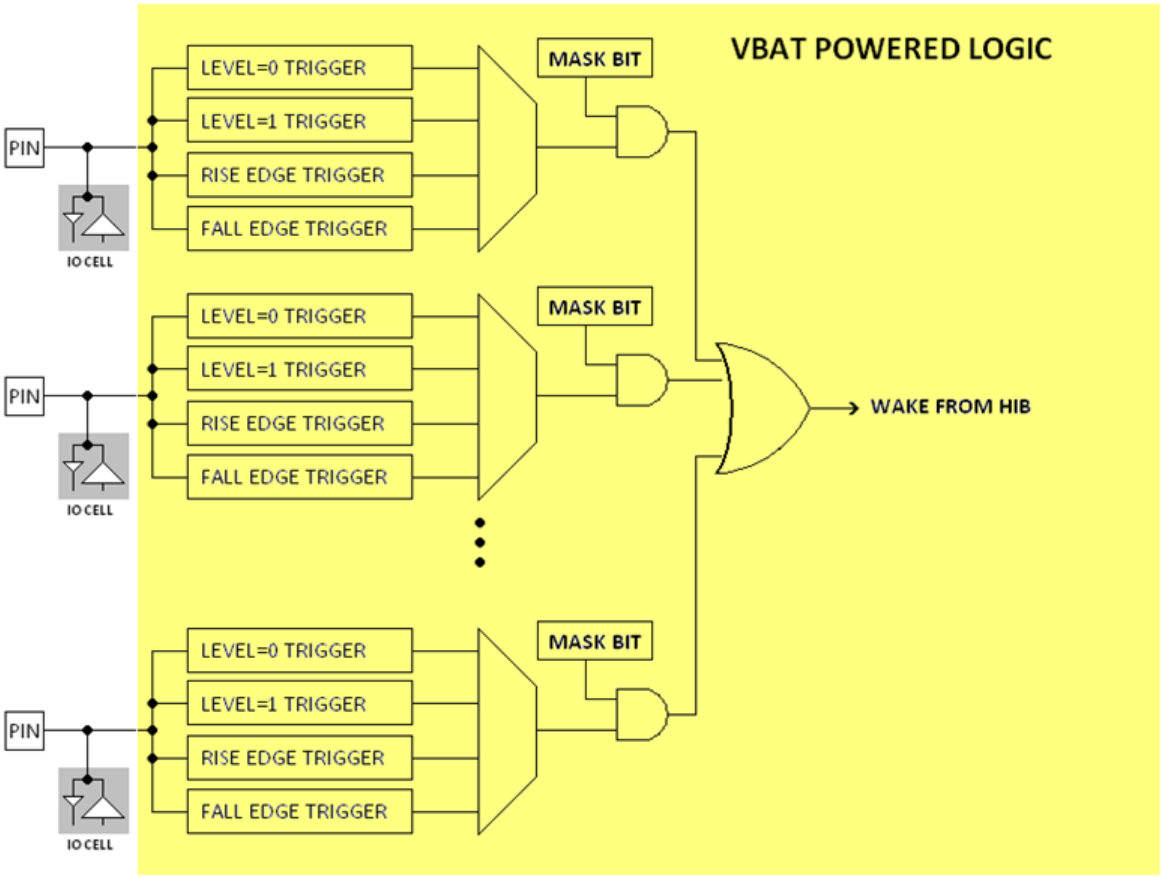

Similar capability is available in LPDS mode as well. However, in case of LPDS, only one pin at a time can be selected as the wake-up source. Wake-up sources are covered in detail in .

16.8.6 Sense on Power

The CC32xx implements a sense on power scheme. By using a few board level pull resistors, the CC32xx can be configured by the user to power up in one of the three following modes:

1. Fn4WJ: Functional mode with 4-wire JTAG mapped to fixed pins
2. Fn2WJ: Functional mode with 2-wire SWD mapped to fixed pins
3. LDfrUART : UART load mode for flashing the system during development and in OEM assembly line (for example: serial flash connected to CC32xxR)

Sense-on-power (SoP) values are sensed from the device pin during power up. This encoding determines the boot flow, as well as the default mapping for some of the pins (JTAG, SWD, UART0). Three SoP pins are used for this purpose. Before the device is taken out of reset, the SoP values are made available on a register and determine the device character while powering up. Table 16-14 shows the pull configurations.

Copyright © 2017, Texas Instruments Incorporated

Table 16-14. Sense-on-Power Configurations

SoP Mode	SoP[2]	SoP[1]	SoP[0]	Name	Comment
LDfrUART	Pullup	Pulldown	Pulldown	UARTLOAD (4-wire JTAG)	Factory/Lab Flash/SRAM load through UART
Fn2WJ	Pulldown	Pulldown	Pullup	FUNCTIONAL_2WJ	Functional development mode. In this mode, two-pin JTAG is available to the developer. TMS and TCK are available for debugger connection.
Fn4WJ	Pulldown	Pulldown	Pulldown	FUNCTIONAL_4WJ	Functional development mode. In this mode, four pin JTAG is available to developer. TDI, TMS, TCK, and TDO are available for debugger connection.

The recommended value of a pull resistor for SOP0, SOP1 is 100 KΩ. The recommended value of a pull resistor for SOP2 is 10 KΩ.

SOP2 may be used by the application after chip power up is complete. To avoid spurious SOP values being sensed at power up, TI recommends that the SOP2 pin should be used only for output signals. SOP0 and SOP1, on the other hand, are multiplexed with WLAN analog test pins, and not available for application.

Copyright © 2017, Texas Instruments Incorporated

Advance Encryption Standard Accelerator (AES)

This section describes the Advanced Encryption Standard (AES) cryptographic hardware-accelerated module.

Topic **Page**

17.1 AES Overview **594**
17.2 AES Functional Description **594**
17.3 AES Module Programming Guide **609**
17.4 AES Registers **614**

Copyright © 2017, Texas Instruments Incorporated

17.1 AES Overview

This section introduces the AES, and describes the AES main functions and connections in the device.

The advanced encryption standard (AES) security modules provide hardware-accelerated data encryption and decryption operations based on a binary key. The AES is a symmetric cipher module that supports a 128-bit, 192-bit, or 256-bit key in hardware for both encryption and decryption. The AES module is based on a symmetric algorithm, meaning that the encryption and decryption keys are identical. To encrypt data means to convert it from plain text to an unintelligible form called cipher text. Decrypting cipher text converts previously-encrypted data back to its original plain text form.

The main features of the AES accelerator are:

- Support for basic AES encrypt and decrypt operations:
  - Galois/Counter mode (GCM), with basic GHASH operation
  - Counter mode with CBC-MAC (CCM)
  - XTS mode
- Availability of the following feedback operating modes:
  - Electronic code book mode (ECB)
  - Cipher block chaining mode (CBC)
  - Counter mode (CTR)
  - Cipher feedback mode (CFB), 128-bit
  - F8 mode
- Key sizes 128-, 192-, and 256-bits
- Support for CBC_MAC and Fedora 9 (F9) authentication modes
- Basic GHASH operation (when selecting no encryption)
- Key scheduling in hardware
- Support for μDMA transfers
- Fully synchronous design

17.2 AES Functional Description

The following sections describe the features of the AES Module.

17.2.1 AES Block Diagram

Figure 17-1 shows the AES block diagram. A single-core/dual-interface architecture is used.

Copyright © 2017, Texas Instruments Incorporated

Figure 17-1. AES Block Diagram

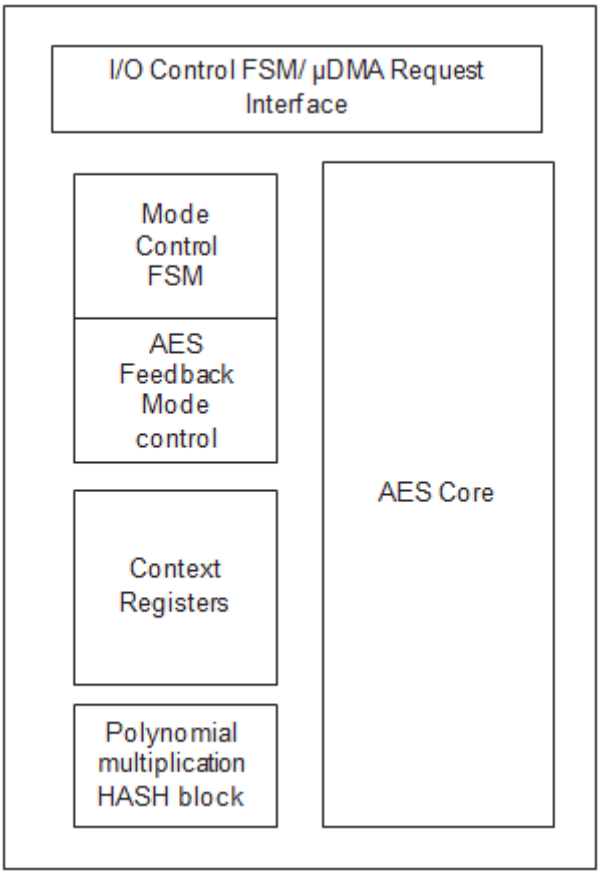

AES is an efficient implementation of the Rijndael cipher (the AES algorithm) and a 128-bit polynomial multiplication (referred to here as GHASH, as per the AES-GCM specification). Rijndael is a block cipher in which each data block is 128 bits. The polynomial multiplication multiplies two 128-bit vectors using the smallest 128-bit irreducible polynomial, represented by the following 128-bit string: {0 120}||10000111. The two implementations are combined into the AES wide-bus engine.

Depending on the availability of context and data, the AES wide-bus engine is automatically triggered to process the data. The AES wide-bus engine is directly connected to the context and data registers, so that it can immediately start processing when all data is available. The AES wide-bus engine also interfaces to the I/O control FSM/µDMA request interface.

AES comprises the following major functional blocks:

- Global control FSM and µDMA interface
- Register interface module
- The AES wide-bus engine

The AES wide-bus engine, which is the major top-level component, comprises the following functional blocks:

- Mode control FSM: Manages the data flow to and from the AES wide-bus engine and starts each encryption or decryption operation.
- Feedback modes: The logic that implements the various feedback modes supported by AES.
- GHASH core: The polynomial multiplication algorithm used for AES-GCM
- AES key scheduler: Generates AES encryption and decryption (round) keys
- AES encryption core: The AES encryption algorithm
- AES decryption core: The AES decryption algorithm

Copyright © 2017, Texas Instruments Incorporated

- Substitution-boxes (S-Boxes): Contain AES S-Box GF(2^8) implementations

AES encryption requires a specific number of rounds, depending on the key length. The supported key lengths are 128-, 192-, and 256-bit, which require 10, 12, and 14 rounds, respectively, or 32, 38, and 44 clock cycles, respectively, because {number of clock cycles} = 2 + 3 × {number of rounds}.

The larger key lengths provide greater encryption strength at the expense of additional rounds and therefore reduced throughput. The overall throughput of the AES executing polynomial multiplication is adjusted based on the overall cryptographic performance. The AES module contains one Electronic Codebook (ECB) core and a dedicated 32-cycle polynomial multiplication module for performing GHASH operations. Polynomial multiplication operates in parallel with the AES core, if data is available for both modules.

Depending on the key size (128/192/256 bits), this core requires 32, 38, or 44 clock cycles to process one 128-bit data block. While one data block processes, the next block can be preloaded immediately. When a block is preloaded, the previous block must finish before additional data can be loaded. Therefore, once the pipeline is full, sequential data blocks can be passed every 32, 38, or 44 clock cycles.

17.2.1.1 Interfaces

The interface signals to the AES module can be grouped into the following categories:

- Clock enable
- DMA and interrupt interface, used to request new context and packet data or to indicate available result data (encrypted or decrypted data, or authentication result)
- Functional register interface

17.2.1.2 AES Wide-Bus Engine

The AES wide-bus engine performs the cryptographic operations. The composition of the AES core is:

- The main data path operates on the input block, performing the required substitution, shift, and mix operations.
- The key scheduler generates the round keys. A new subkey is generated and XORed with the data each round.

AES Key Scheduler

The AES key scheduler generates the round keys. During each round, a new subkey is generated from the input key to be XORed with the data. Round keys are generated on-the-fly and parallel to data processing to minimize register requirements.

For encryption operations, the key sequencer transfers the initial key data to the AES core. For decryption operations, the key scheduler must provide the final subkey to the AES core so it can generate the subkeys in reverse order.

AES Encryption Core

The AES encryption core implements the Rijndael algorithm as specified in [FIPS-197]. This core operates on the input block and performs the required substitution, shift, and mix operations. For each round, the encryption core receives the proper round key from the AES key scheduler. A fundamental component of the AES algorithm is the S-Box. The S-Box provides a unique 8-bit output for each 8-bit input. This implementation of the AES encryption core has a 64-bit data path.

AES Decryption Core

The architecture of the AES decryption core is generally the same as the architecture of the encryption core. One difference is that the generation of round keys for decryption requires an initial conversion of the input key (always supplied by the host in the form of an encryption key) to the corresponding decryption key. This conversion is done by performing a dummy encryption operation and storing the final round key as a decryption key. The key scheduler is then reversed to generate the round keys for the decryption operation. Consequently, for each sequence of decryption operations under the same key, a single throughput reduction equal to the time to encrypt a single block occurs. Once a decryption key is generated, subsequent decryption operations with the same key use this generated decryption key directly.

Copyright © 2017, Texas Instruments Incorporated

AES Feedback Mode Block

The AES feedback mode block buffers the feedback parameters and controls the various feedback modes. For more information about the ECB, CBC, CTR, and CFB modes of operation, see the NIST-SP800-38A specification.

CTR implements the standard incrementing function, as described in the NIST-SP800-38A specification, with *m* set to 16 or a multiple of 32.

AES-XTS mode requires a polynomial multiplication for initialization vector (IV) generation of the AES operation. This multiplication can be simplified when the first result is available due to the definition and use of the block number within a unit. The input for the polynomial multiplication is not directly j, but α^j, where $\alpha = x^2$ in the GF(2^{128}) domain.

In addition, f8 encryption/decryption mode and f9 and (X)CBC-MAC authentication modes are available.

GHASH Block

The data sequencer manages the data flow to and from the AES core. For data input, the data sequencer monitors the input buffer until a 16-byte block is available. If the AES core is idle, the data sequencer writes this data block to the internal working registers of the AES core, thus clearing the buffer for the next block.

After completing an encryption or decryption operation, the data sequencer writes the AES output to the output buffer. If the output buffer is full at the time of completion, the AES core is held until the buffer clears. Although the data sequencer is designed to support uninterrupted packet encryption, the host must properly manage the input and output packet buffers to achieve optimal performance.

17.2.2 AES Algorithm

The AES algorithm generates block ciphers. The AES block size is 16 bytes. The AES keys can be coded on 128, 192, or 256 bits. The larger key sizes provide a higher level of security, but at the cost of a moderate decrease in throughput.

For the AES algorithm:

- The length of the input and output blocks is 128 bits, which is represented by Nb = 4, which reflects the number of 32-bit words.
- The length of the cipher key (K) is 128, 192, or 256 bits. The key length is represented by Nk = 4, 6, or 8, which reflects the number of 32-bit words in the cipher key.
- The number of rounds to be performed during the execution of the algorithm is dependent on the key size. The number of rounds is represented by Nr, where Nr = 10 when Nk = 4 (128-bit key); Nr = 12 when Nk = 6 (192-bit key); and Nr = 14 when Nk = 8 (256-bit key).

Table 17-1 lists the combinations of keys, blocks, and rounds.

Table 17-1. Key-Block-Round Combinations

Key	Key Length (Nk)	Block Size (Nb)	Number of Rounds (Nr)
128 bits	4	4	10
192 bits	6	4	12
256 bits	8	4	14

The AES algorithm for cipher and inverse cipher uses a round function composed of four different byte-oriented transformations:

- Byte substitution using a substitution table (S-Box): This transformation is a non-linear byte substitution that operates independently on each byte of the state (the state is an intermediate processed block of 128 bits inside the AES; the state is arranged as an array of [4 × Nk] bytes) using an S-Box. This S-Box transformation is reversible.
- Shifting rows of the state array by different offsets: In this transformation, the bytes in the last three rows of the state are cyclically shifted over different numbers of bytes (offsets). The first row (r = 0) is not shifted.

Copyright © 2017, Texas Instruments Incorporated

- Mixing the data within each column of the state array: This transformation operates on the state column-by-column, treating each column as a four-term polynomial. The columns are considered polynomials over GF(2^8) and multiplied modulo x^4+ 1 with a fixed polynomial a(x).
- Adding a round key to the state: In this transformation, a round key is added to the state by a simple bitwise XOR operation. Each round key consists of Nb words from the key schedule.

The AES algorithm takes the cipher key (K) and performs a key expansion routine to generate a key schedule. The key expansion generates a total of Nb × (Nr + 1) words: The algorithm requires an initial set of Nb words, and each of the Nr rounds requires Nb words of key data. The resulting key schedule consists of a linear array of 4-byte words, denoted [w_i], with i in the range 0 ≤ i ≤ Nb × (Nr + 1).

17.2.3 AES Operating Modes

17.2.3.1 Supported Modes of Operation

ECB Feedback Mode

Figure 17-2 shows the basic ECB feedback mode of operation, where the input data is passed directly to the basic cryptographic core and the output is passed directly to the output buffer.

For decryption, the cryptographic core operates in reverse: the decryption data path is used for data processing, whereas encryption uses the encryption data path.

Figure 17-2. AES - ECB Feedback Mode

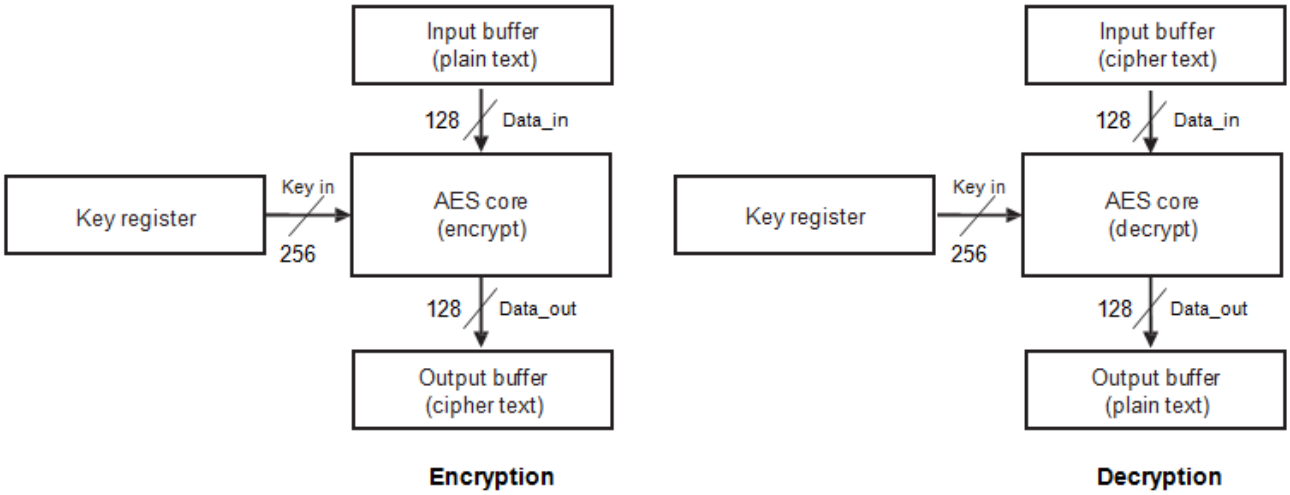

Copyright © 2017, Texas Instruments Incorporated

CBC Feedback Mode

Figure 17-3 shows the CBC feedback mode of operation, where the input data is XORed with the IV before it is passed to the basic cryptographic core. The output of the cryptographic core passes directly to the output buffer and becomes the next IV.

The operation is reversed for decryption, resulting in an XOR at the output of the cryptographic core. The input cipher text of the current operation is the IV for the next operation.

Figure 17-3. AES - CBC Feedback Mode

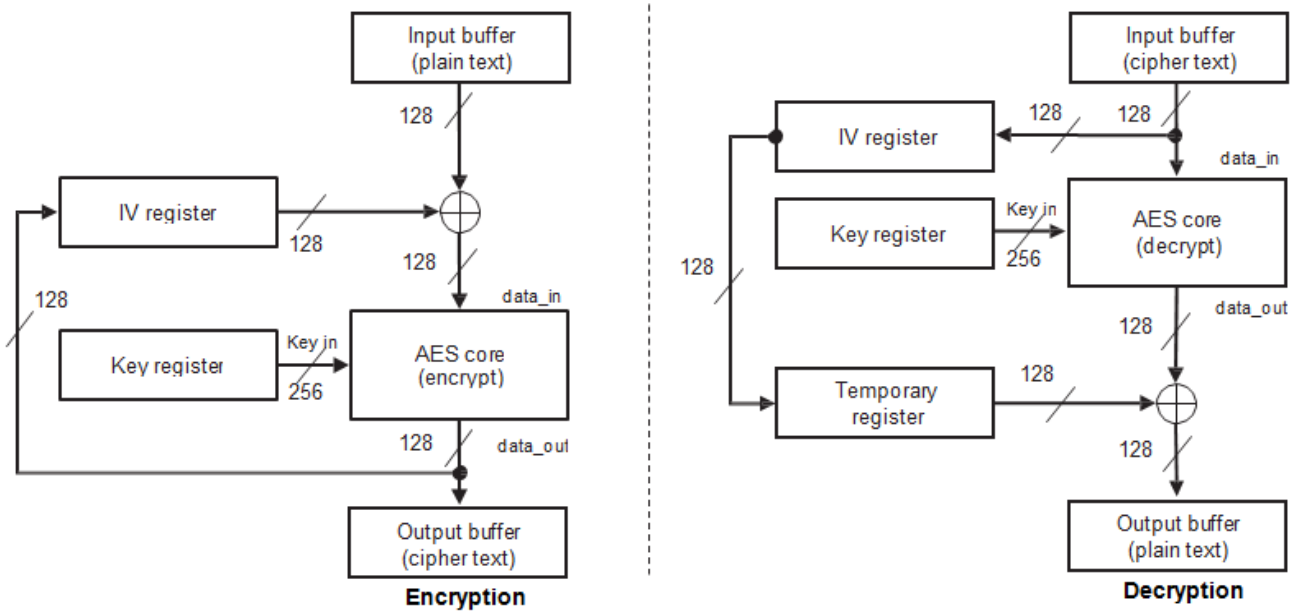

Copyright © 2017, Texas Instruments Incorporated

CTR and ICM Feedback Modes

Figure 17-4 shows the counter feedback (CTR/ICM) mode of operation. This operation encrypts the IV. The output of the cryptographic core (encrypted IV) is XORed with the data, thus creating the output result.

The IV is built out of two components: a fixed part and a counter part. The counter part is incremented with each block. The counter width is selectable per context and can be 16, 32, 64, 96, or 128 bits wide. In this mode, encryption and decryption use the same operation.

Figure 17-4. AES Encryption With CTR/ICM Mode

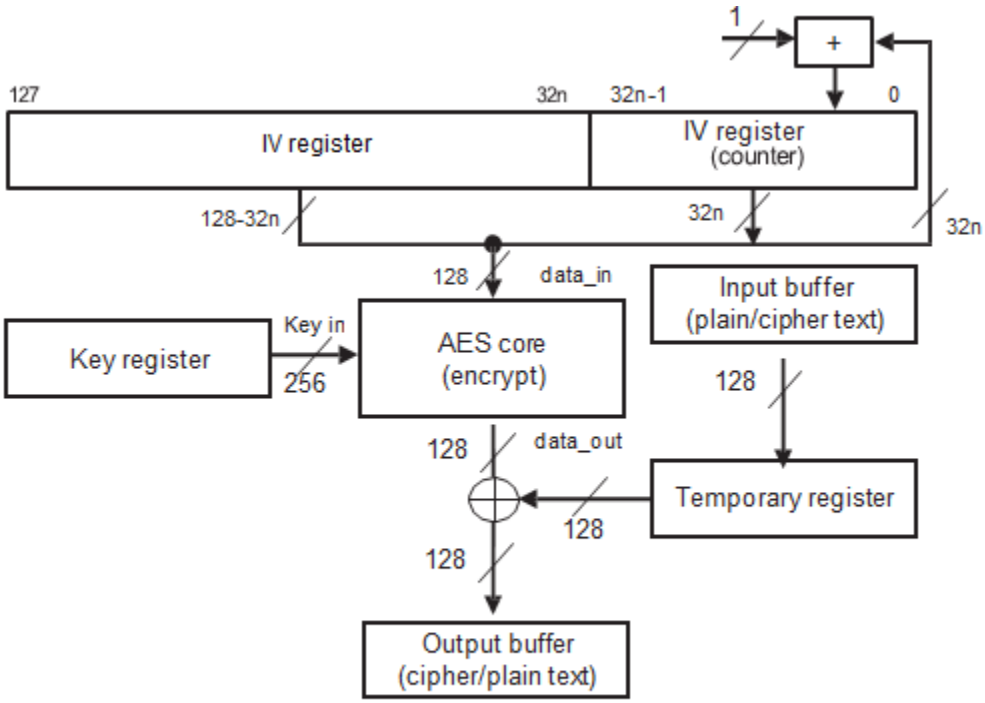

NOTE: The value for n can be 1, 2, 3, or 4 for CTR mode and is ½ for ICM mode.

Copyright © 2017, Texas Instruments Incorporated

CFB Mode

Figure 17-5 shows the full block (128 bits) CFB mode of operation for encryption and decryption. The input for the cryptographic core is the IV; the result is XORed with the data. The result is fed back through the IV register as the next input for the cryptographic core. The decryption operation is reversed, but the cryptographic core still performs encryption.

Figure 17-5. AES - CFB Feedback Mode

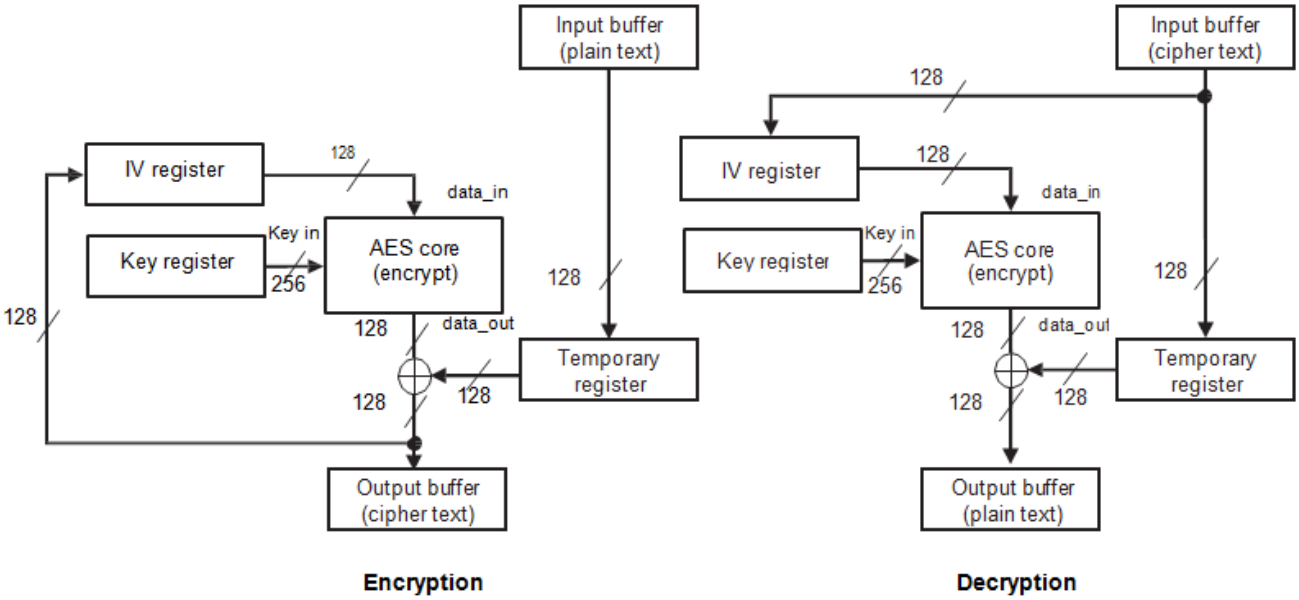

Copyright © 2017, Texas Instruments Incorporated

F8 Mode

Figure 17-6 shows the F8 feedback mode of operation for encryption and decryption. The input to the cryptographic core is the result of the XOR operation of the previous cryptographic core output, a constant IV, and a block counter. The output of the cryptographic core is XORed with the input to create the result. In this mode, encryption and decryption use the same operations.

Figure 17-6. AES - F8 Mode

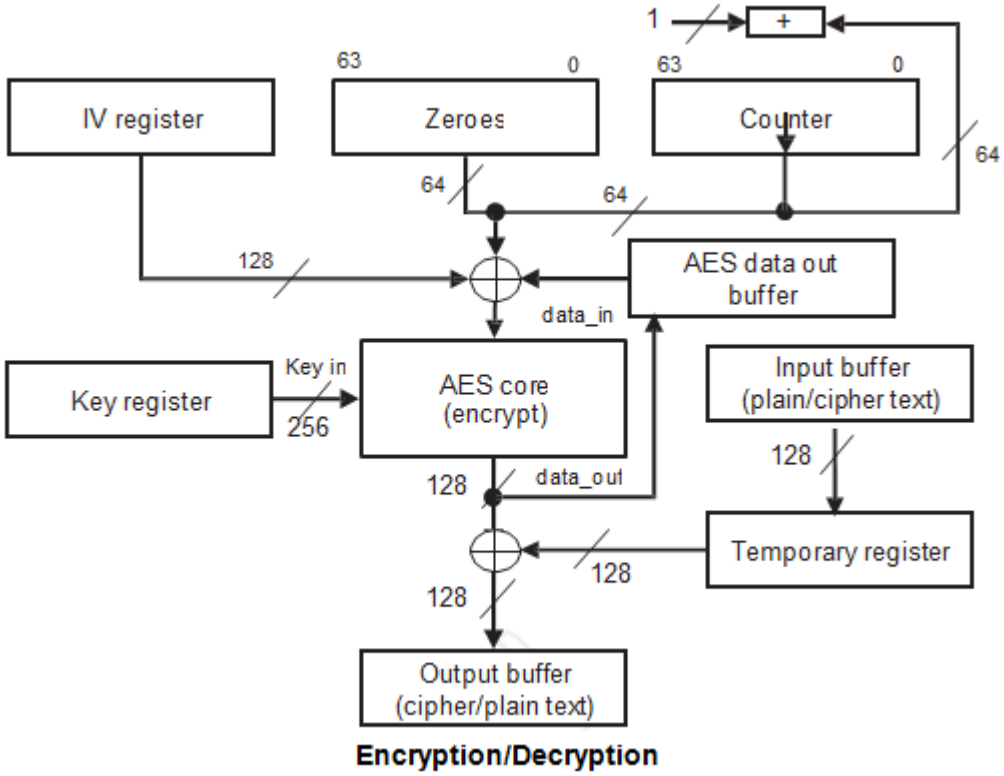

Copyright © 2017, Texas Instruments Incorporated

XTS Operation

Figure 17-7 shows the XTS mode of operation for encryption and decryption. The input to the cryptographic core is XORed with the IV; the output of the cryptographic core is XORed with the same IV. For decryption, the cryptographic core operates in reverse, but the XOR operations are the same.

Figure 17-7. AES - XTS Operation

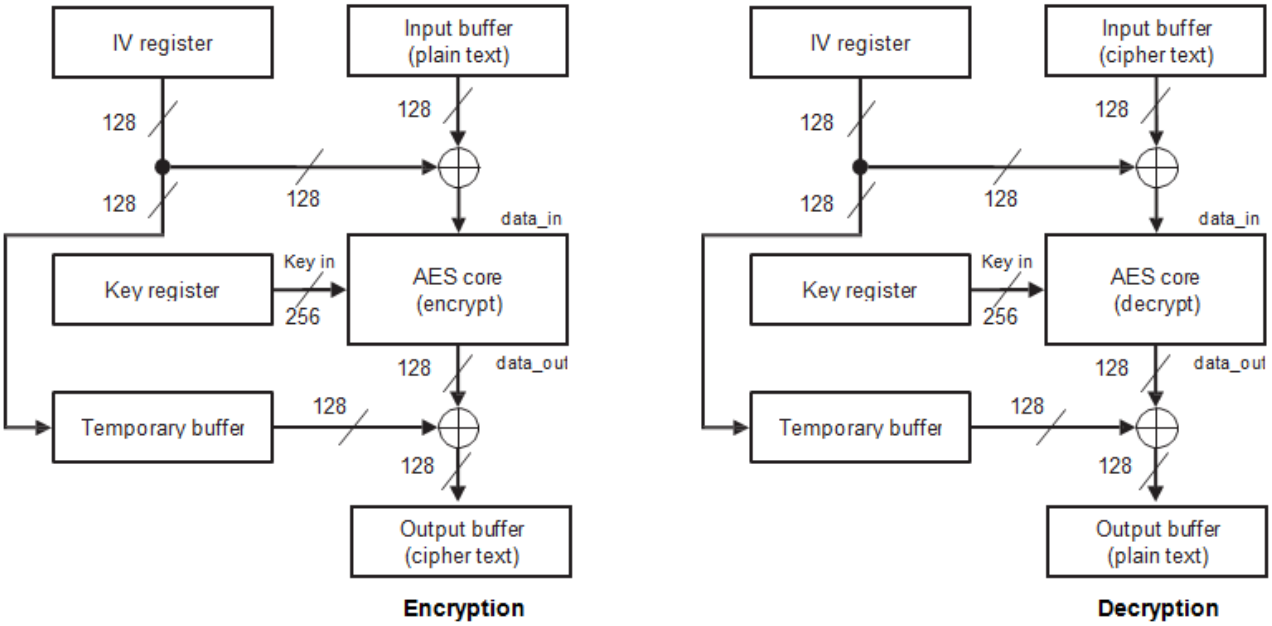

NOTE: The IV is created with an initial encryption, followed by an LFSR operation for each new block.

Copyright © 2017, Texas Instruments Incorporated

F9 Operation

Figure 17-8 shows the F9 authentication mode of operation, where the input to the cryptographic core is XORed with the IV, and the output is XORed with the previous result to create the next result. The cryptographic core output is fed back as IV for the next block. The result is the output of the last XOR operation of the cryptographic core output.

Figure 17-8. AES - F9 Operation

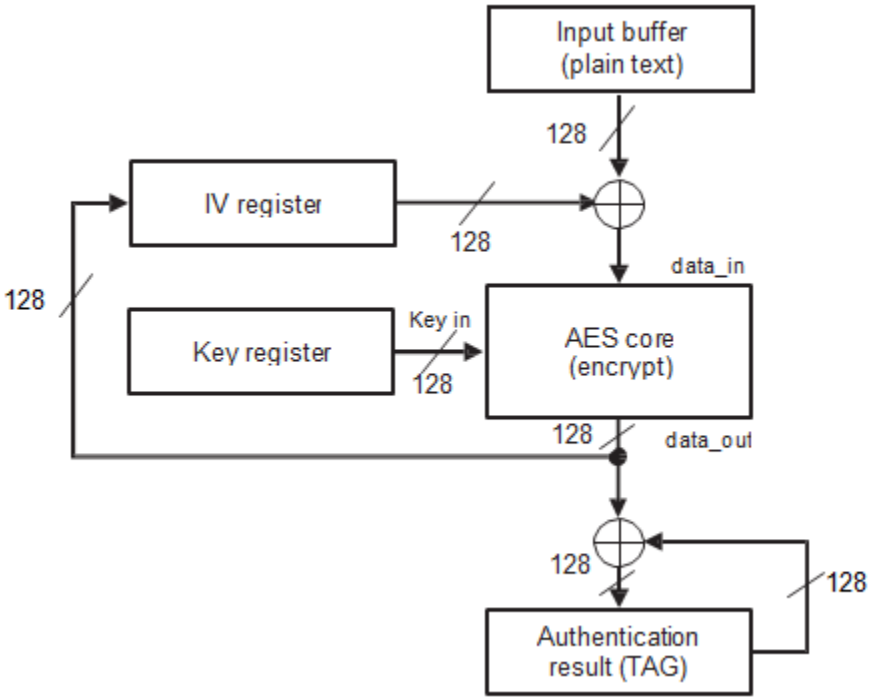

Copyright © 2017, Texas Instruments Incorporated

CBC-MAC Operation

Figure 17-9 shows the CBC-MAC authentication mode of operation, where the input to the cryptographic core is XORed with the IV. The cryptographic core output is then fed back as IV for the next block. The last data input block is XORed with an additional input value stored in the temporary buffer; this can be any precalculated value and is dependent on the alignment of the last input block. The result is the cryptographic core output of the last encryption operation.

Figure 17-9. AES - CBC-MAC Authentication Mode

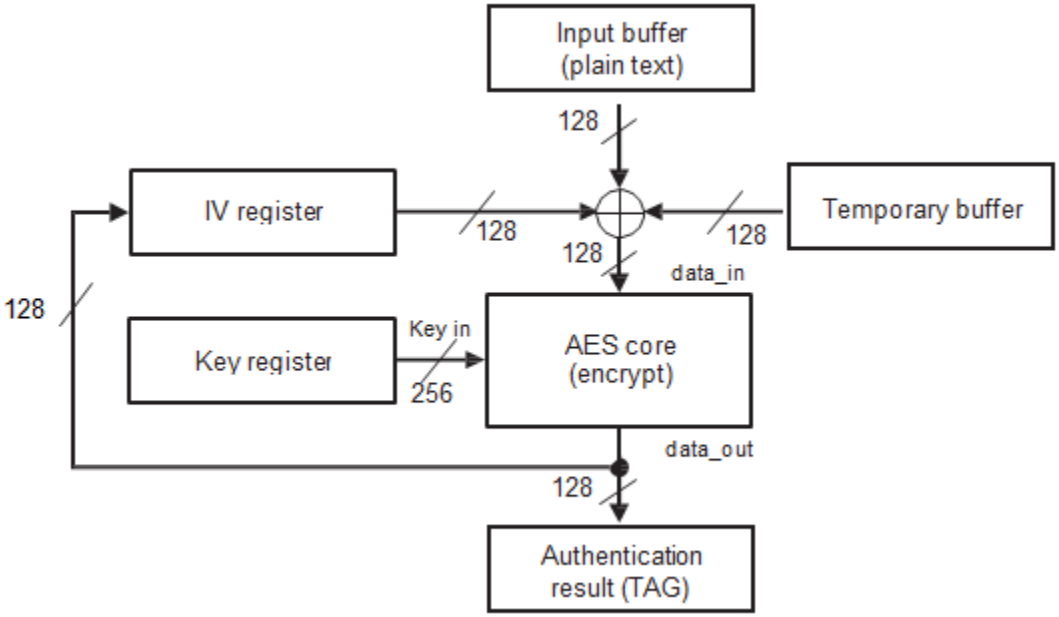

Copyright © 2017, Texas Instruments Incorporated

GCM Operation

Figure 17-10 shows one round of a GCM operation for encryption and decryption. A 32-bit counter is used as IV (as it is for CTR mode). The data is encrypted in the same way as in CTR mode, by XORing the cryptographic core output with the input. After the encryption/decryption, the ciphertext is XORed with the intermediate authentication result. The XORed result is used as input for the polynomial multiplication to create the next (intermediate) authentication result. For more information about the GCM protocol, see the section called “GCM Protocol Operation” on page 1003.

Figure 17-10. AES - GCM Operation

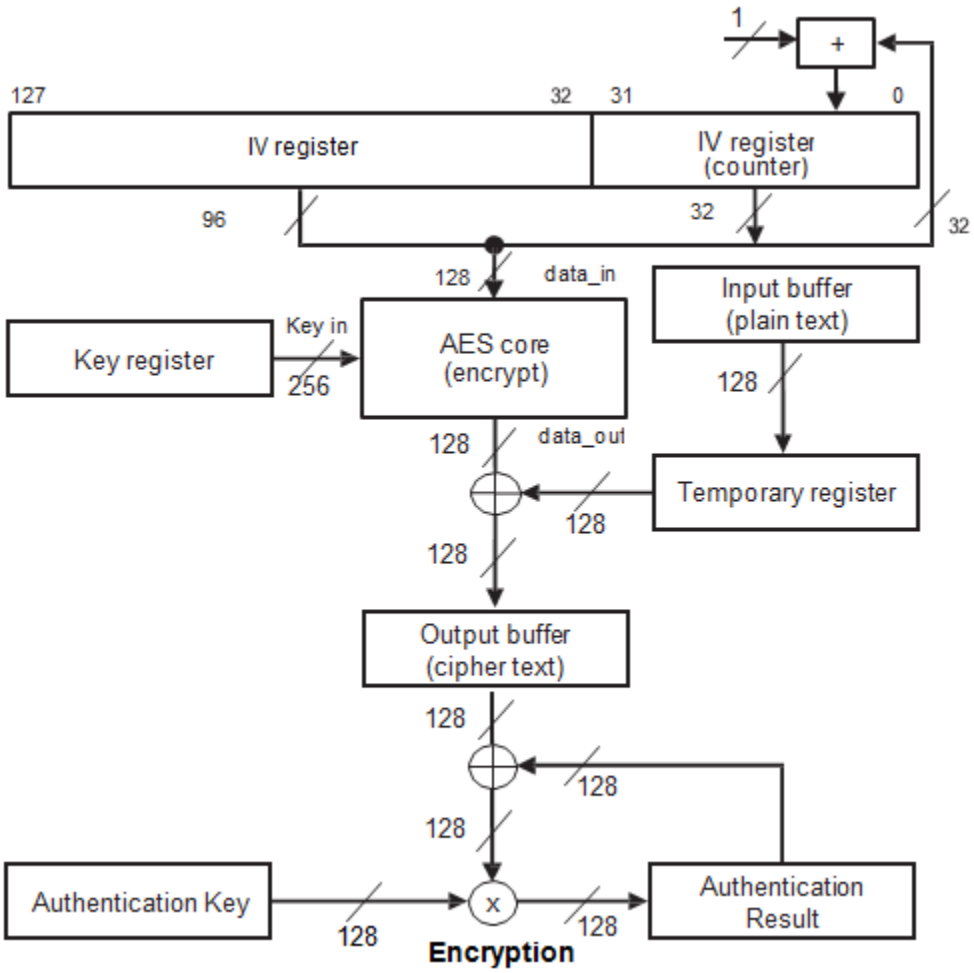

Copyright © 2017, Texas Instruments Incorporated

CCM Operation

Figure 17-11 shows one round of a CCM (counter with CBC-MAC) operation for encryption and decryption. A 32-bit counter is used as IV (as it is for CTR mode). The data is encrypted in the same way as in CTR mode, by XORing the cryptographic core output with the input. Immediately after the encryption operation, the plaintext is XORed with the intermediate authentication result. The XOR result is used as input for a second encryption operation to calculate the next (intermediate) authentication result.

Figure 17-11. AES - CCM Operation

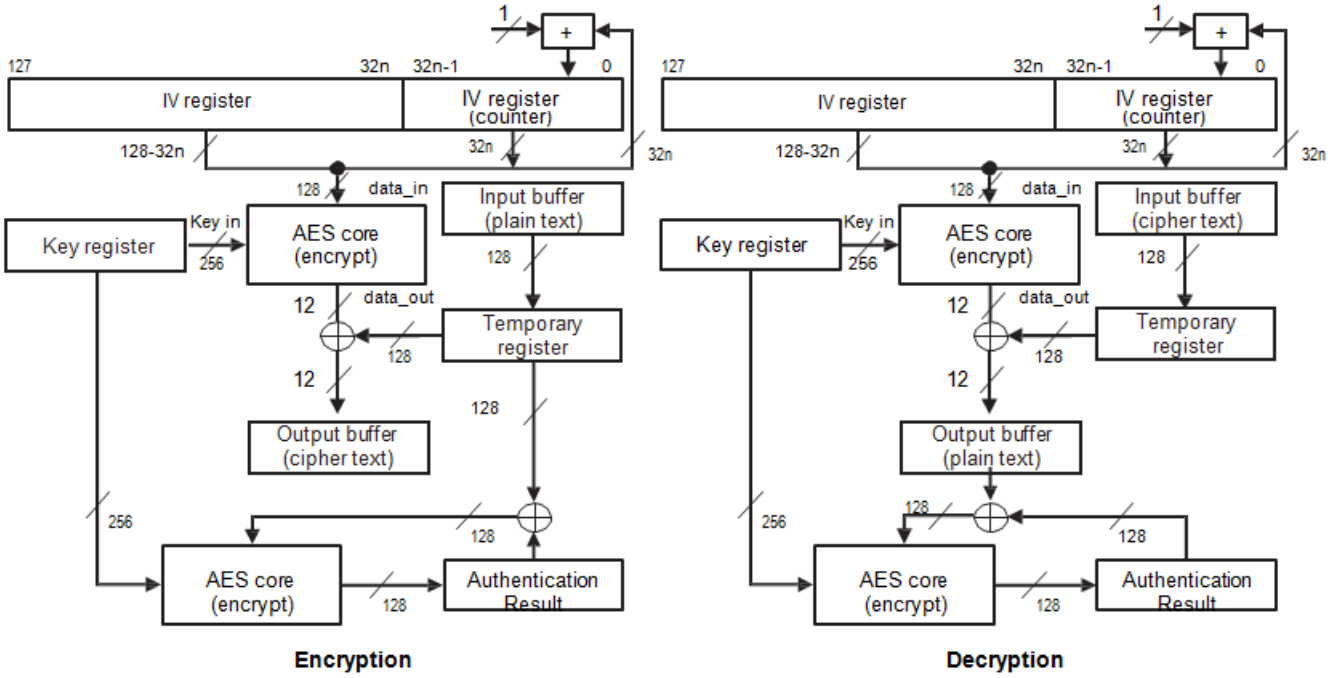

Copyright © 2017, Texas Instruments Incorporated

17.2.3.2 Extended and Combined Modes of Operations

This section describes the protocols (or autonomous precalculations) supported by the AES wide-bus engine.

GCM Protocol Operation

A GCM protocol operation is a combined operation consisting of encryption or decryption, and authentication. A part of the input data stream can be authenticated only, while normally most of the input data is encrypted or decrypted and authenticated. The authentication-only data must always be in front of the data requiring encryption. Within GCM, the authentication-only data is called the additional authentication data (AAD). The AAD is fetched independently of other data.

The intermediate (temporary) result data is used as input to the remaining authentication operation. Because the authentication operation does not require the cryptographic core but only the polynomial multiplication, encryption, decryption, and authentication can be performed in parallel. After encryption of the last data block, additional polynomial multiplication and encryption are required to authenticate a 128-bit length vector and finally encrypt the authentication result.

CCM Protocol Operation

The CCM protocol operation is a combined operation consisting of encryption or decryption, and authentication. The authentication and encryption or decryption operations use the cryptographic core; these are executed sequentially on the AES core. A part of the data stream can require authentication only. The authentication-only data must always be in front of the data requiring encryption.

Authentication starts with the encryption of a predefined block B0. This block consists of flags, nonce, and message length. The next blocks contain the authentication data length concatenated with the authentication-only data. After processing the authentication-only data, the encryption or decryption operations are performed, each followed by the related authentication of the plaintext data block (which equals the input in the case of encryption, and the output in the case of decryption). The final authentication result must be encrypted using the output of the encryption of the IV block A0. This block contains the IV (consisting of flags and nonce) concatenated with the counter, which is zero for A0.

17.2.4 Hardware Requests

The AES module can assert a μDMA request for context in, context out, input data, or output data read. The AES uDMA Interrupt Mask (AES_DMAIM) register can be set to generate interrupts during the following events:

- Context In μDMA request (Cin)
- Context Out μDMA request (Cout)
- Data In μDMA request (Din)
- Data Out μDMA request (Dout)

The AES module can be programmed to assert an interrupt when the uDMA has completed its last transfer.

If context and data transfers are to be handled through software, then the AES Interrupt Enable (AES_IRQENABLE) can be used to enable interrupt triggering when context out, context in, data in, or data out is ready. The AES Interrupt Status (AES_IRQSTATUS) indicates when an interrupt is triggered, as shown in Table 17-2.

Table 17-2. Interrupts and Events

Event	Description
AES_IRQSTATUS[3]: CONTEXT_OUT	Context output interrupt
AES_IRQSTATUS[2]: DATA_OUT	Data output interrupt
AES_IRQSTATUS[1]: DATA_IN	Data input interrupt
AES_IRQSTATUS[0]: CONTEXT_IN	Context input interrupt

Copyright © 2017, Texas Instruments Incorporated

17.3 AES Module Programming Guide

17.3.1 AES Low - Level Programming Models

This section describes the low-level hardware programming sequences for configuring and using the AES module.

17.3.1.1 Global Initialization

The following list describes the requirements for initializing the AES and associated modules.

1. Enable the clock to cryptography module (that includes AES) by setting the R0 bit in the (CRYPTOCLKEN) register in the application reset and clock management module (physical address: 0x4402 50B8).
2. Configure the AES μDMA channels for Context In, Context Out, Data In, and Data Out by programming the appropriate encoding value in the DMA Channel Map Select n (DMA_CHMAPn) register in the μDMA module. For more information, refer to Section 1.3.3.
3. If the AES channels are configured in the μDMA, enable the required AES DMA requests by programming bits [9:5] of the AES_SYSCONFIG register, in addition to the completion interrupts in the AES DMA Interrupt Mask (DTHE_AES_IM) register.
4. Specify the size of the keys by programming the KEY_SIZE bit field in the AES_CTRL register.
5. Load AES Key 1 (AES_KEY1_n) register.
6. Load AES Key 2 (AES_KEY2_n) register if it is used by the configuration mode.
7. Configure the AES for the appropriate encryption or decryption mode (see Section 17.3.1.2).
8. Select encryption or decryption by programming the DIRECTION bit in the AES Control (AES_CTRL) register.

17.3.1.2 Initialization Subsequence

The following sections list the initialization subsequences for the available encryption and decryption modes:

Subsequence: Initialize CCM AES Core Mode

The CCM mode initialization is as follows:

1. Define the width of the length field and the length of the authentication field by programming the CCM_L and CCM_M bit fields in the AES_CTRL register.
2. Enable counter mode by setting the CTR bit in the AES_CTRL register.
3. Load the authentication data length in the AUTH field of the AES Authentication Data Length (AES_AUTH_LENGTH) register.
4. Select the IV counter by programming the CTR_WIDTH field in the AES_CTRL register.
5. Load the AES Initialization Vector Input n (AES_IV_IN_n) registers.

Subsequence: Initialize GCM AES Core Mode

The steps to enable GCM mode are as follows:

1. Enable counter mode by setting the CTR bit in the AES_CTRL register.
2. Load the authentication data length in the AUTH field of the AES Authentication Data Length (AES_AUTH_LENGTH) register.
3. Select the IV counter by programming the CTR_WIDTH field in the AES_CTRL register.
4. Load the AES Initialization Vector Input n (AES_IV_IN_n) registers.

Copyright © 2017, Texas Instruments Incorporated

Subsequence: Initialize CBC-MAC AES Core Mode

To initialize CBC-MAC mode:

1. Enable CBC-MAC mode by setting the CBCMAC bit in the AES_CTRL register.
2. Select encryption mode by setting the DIRECTION bit in the AES_CTRL register.
3. Load the AES Initialization Vector Input n (AES_IV_IN_n) registers.

Subsequence: Initialize F9 AES Core Mode

The steps for configuring the AES for F9 mode are as follows:

1. Enable F9 mode by setting the F9 bit in the AES_CTRL register.
2. Set the key size to 128 bits by programming the KEY_SIZE field to 0x1 in the AES_CTRL register.
3. Load the AES Initialization Vector Input n (AES_IV_IN_n) registers.

Subsequence: Initialize F8 AES Core Mode

The steps for configuring the AES for F8 mode are as follows:

1. Enable F8 mode by setting the F8 bit in the AES_CTRL register.
2. Select the counter width by programming the CTR_WIDTH field in the AES_CTRL register.
3. Set the key size to 128 bits by setting the KEY_SIZE field to 0x1 in the AES_CTRL register.
4. Load the AES Initialization Vector Input n (AES_IV_IN_n) registers.

Subsequence: Initialize XTS AES Core Mode

The steps for XTS mode configuration are as follows:

1. Enable XTS mode by configuring the XTS field in the AES_CTRL register.
2. If the XTS field in the AES_CTRL register indicates that the AAD length is required, load the AAD length in the AES_AUTH_LENGTH register.
3. Load the AES Initialization Vector Input n (AES_IV_IN_n) registers.

Subsequence: Initialize CFB AES Core Mode

To initialize the AES code for CFB mode:

1. Enable CFB mode by setting the CFB bit in the AES_CTRL register.
2. Load the AES Initialization Vector Input n (AES_IV_IN_n) registers.

Subsequence: Initialize ICM AES Core Mode

To initialize the AES code for ICM mode:

1. Enable ICM mode by setting the ICM bit in the AES_CTRL register.
2. Configure for a 16-bit counter by programming the CTR_WIDTH to 0x0 in the AES_CTRL register.
3. Load the AES Initialization Vector Input n (AES_IV_IN_n) registers.

Subsequence: Initialize CTR AES Core Mode

To initialize CTR mode:

1. Enable CTR mode by setting the CTR bit in the AES_CTRL register.
2. Select counter width by programming the CTR_WIDTH in the AES_CTRL register.
3. Load the AES Initialization Vector Input n (AES_IV_IN_n) registers.

Subsequence: Initialize CBC AES Core Mode

To configure CBC mode:

1. Enable CBC mode by setting the MODE bit in the AES_CTRL register.
2. Load the AES Initialization Vector Input n (AES_IV_IN_n) registers.

Copyright © 2017, Texas Instruments Incorporated

17.3.1.3 Operational Modes Configuration

AES Polling Mode

Main Sequence: AES Polling Mode – Figure 17-12 shows AES polling mode. The registers used in AES polling mode are:

- AES Data RW Plaintext/Ciphertext 0 (AES_DATA_IN_0) registers
- AES Control (AES_CTRL) register
- AES Hash Tag Out 0 (AES_TAG_OUT_0) register

Figure 17-12. AES Polling Mode

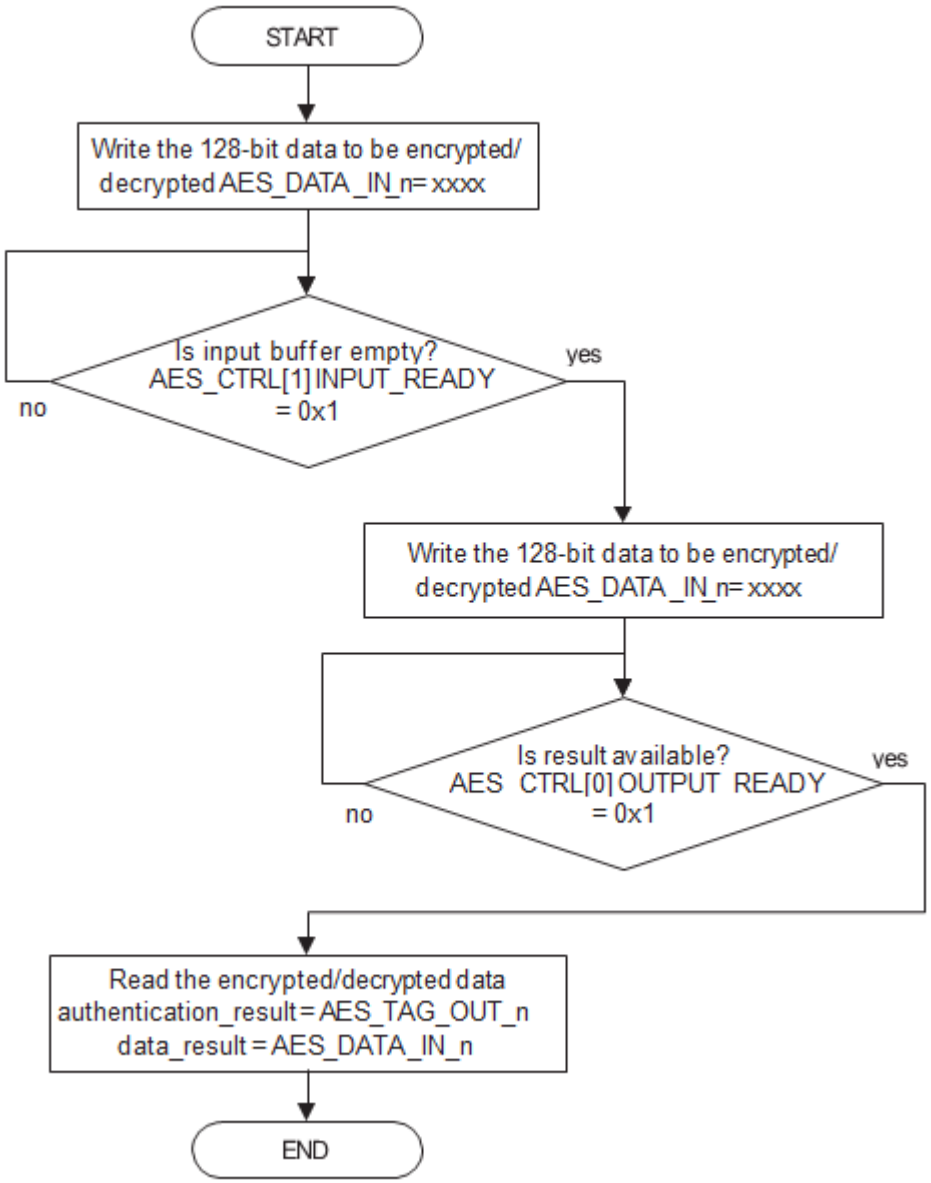

Copyright © 2017, Texas Instruments Incorporated

AES Interrupt Mode

The application can use software interrupts to control the flow of Context In, Context Out, Data In, and Data Out requests. To enable these interrupts:

1. When the device has been initialized, by following the initialization sequences described in Section 17.3.1.1 and Section 17.3.1.2, the application can enable the AES module interrupts through the AES Interrupt Enable (AES_IRQENABLE) register.
2. Load the input buffers, AES_DATA_IN_n, with data.

NOTE: If the application uses interrupt mode, an interrupt is generated for each block of processed data. To support larger data flow, AES μDMA mode should be used and the bits in the AES_IRQENABLE register should be cleared.

AES DMA Mode

When AES DMA mode is enabled, the AES_IRQENABLE register should be cleared. To enable the μDMA to transfer data, follow these steps:

1. When the AES module has been initialized, enable the AES module μDMA channels by programming the DMA Channel Map Select n (DMA_CHMAPn) register in the μDMA module. Refer to Figure 17-1 for the channel map associated with AES.
2. Configure the dma_done interrupts by programming the AES DMA Masked Interrupt Status (DTHE_AES_MIS) register.
3. Enable the μDMA channels in the AES by programming the μDMA enable bits in the AES System Configuration (AES_SYSCONFIG) register.
4. The input buffer registers, AES_DATA_IN_n, are now loaded.

17.3.1.4 AES Events Servicing

Interrupt Servicing

This section describes the event servicing of the module. Figure 17-13 shows the AES interrupt service. The registers used during event servicing are:

- AES_IRQSTATUS
- AES_KEY1_n
- AES_KEY2_n
- AES_IV_IN_n
- AES_DATA_IN_n
- AES_TAG_OUT_n
- AES_IRQENABLE

Copyright © 2017, Texas Instruments Incorporated

Figure 17-13. AES Interrupt Service

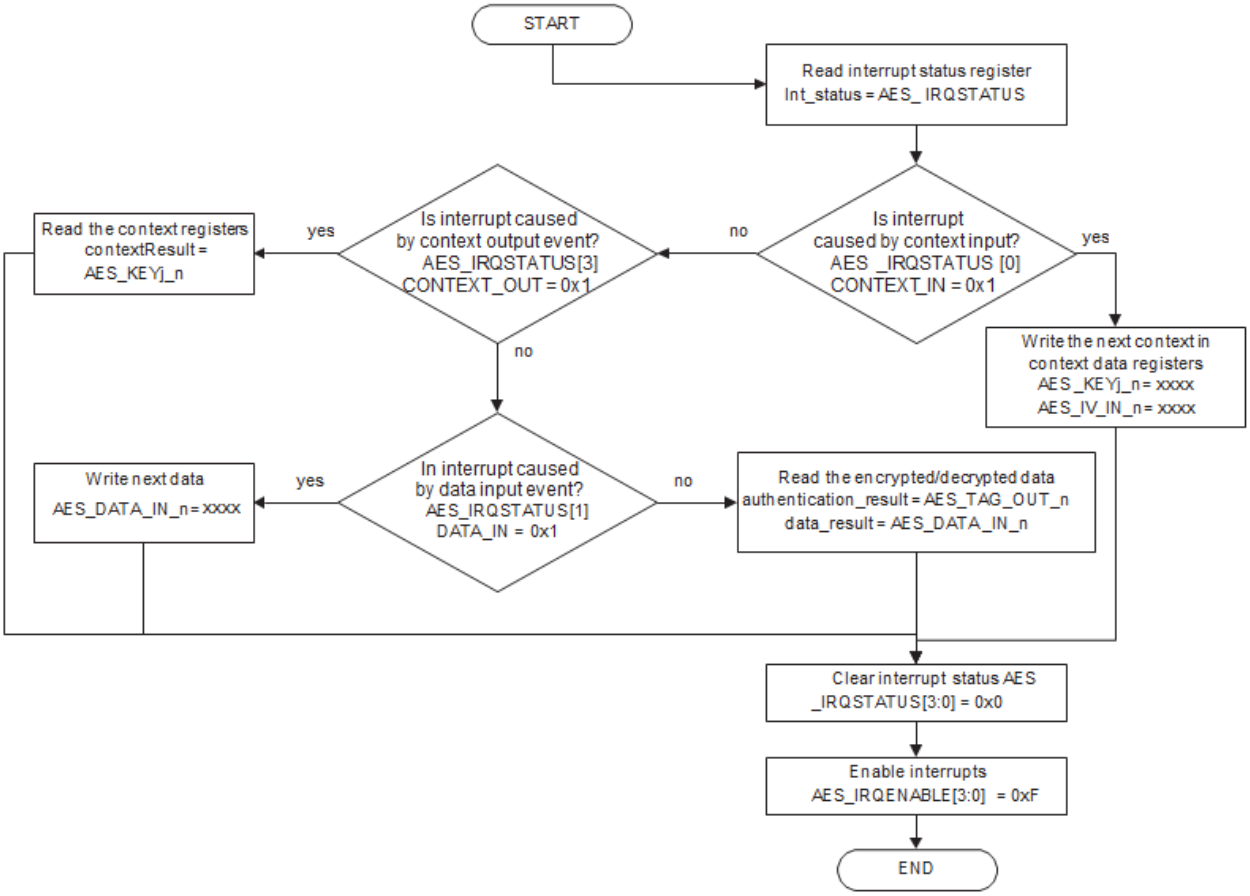

Copyright © 2017, Texas Instruments Incorporated

17.4 AES Registers

Table 17-3 lists the memory-mapped registers for the AES. All register offset addresses not listed in Table 17-3 should be considered as reserved locations and the register contents should not be modified.

Table 17-3. AES Registers

Offset	Acronym	Register Name	Section
0h	AES_KEY2_6	Key register	Section 17.4.1
4h	AES_KEY2_7	Key register	Section 17.4.2
8h	AES_KEY2_4	Key register	Section 17.4.3
Ch	AES_KEY2_5	Key register	Section 17.4.4
10h	AES_KEY2_2	Key register	Section 17.4.5
14h	AES_KEY2_3	Key register	Section 17.4.6
18h	AES_KEY2_0	Key register	Section 17.4.7
1Ch	AES_KEY2_1	Key register	Section 17.4.8
20h	AES_KEY1_6	Key register	Section 17.4.9
24h	AES_KEY1_7	Key register	Section 17.4.10
28h	AES_KEY1_4	Key register	Section 17.4.11
2Ch	AES_KEY1_5	Key register	Section 17.4.12
30h	AES_KEY1_2	Key register	Section 17.4.13
34h	AES_KEY1_3	Key register	Section 17.4.14
38h	AES_KEY1_0	Key register	Section 17.4.15
3Ch	AES_KEY1_1	Key register	Section 17.4.16
40h	AES_IV_IN_0		Section 17.4.17
44h	AES_IV_IN_1		Section 17.4.18
48h	AES_IV_IN_2		Section 17.4.19
4Ch	AES_IV_IN_3		Section 17.4.20
50h	AES_CTRL		Section 17.4.21
54h	AES_C_LENGTH_0		Section 17.4.22
58h	AES_C_LENGTH_1		Section 17.4.23
5Ch	AES_AUTH_LENGTH		Section 17.4.24
60h	AES_DATA_IN_0	Data register	Section 17.4.25
64h	AES_DATA_IN_1	Data register	Section 17.4.26
68h	AES_DATA_IN_2	Data register	Section 17.4.27
6Ch	AES_DATA_IN_3	Data register	Section 17.4.28
70h	AES_TAG_OUT_0		Section 17.4.29
74h	AES_TAG_OUT_1		Section 17.4.30
78h	AES_TAG_OUT_2		Section 17.4.31
7Ch	AES_TAG_OUT_3		Section 17.4.32
80h	AES_REVISION		Section 17.4.33
84h	AES_SYSCONFIG		Section 17.4.34
8Ch	AES_IRQSTATUS		Section 17.4.35
90h	AES_IRQENABLE		Section 17.4.36
B8h	CRYPTOCLKEN		Section 17.4.37
820h	DTHE_AES_IM	AES Interrupt Mask Set register	Section 17.4.38
824h	DTHE_AES_RIS	AES Interrupt Raw Interrupt Status register	Section 17.4.39
828h	DTHE_AES_MIS	AES Interrupt Masked interrupt Status register	Section 17.4.40
82Ch	DTHE_AES_IC	AES Interrupt Clear Interrupt Status register	Section 17.4.41

Copyright © 2017, Texas Instruments Incorporated

17.4.1 AES_KEY2_6 Register (Offset = 0h) [reset = 0h]

AES_KEY2_6 is shown in Figure 17-14 and described in Table 17-4.

Return to Summary Table.

XTS second key, CBC-MAC third key.

Figure 17-14. AES_KEY2_6 Register

31	30	29	28	27	26	25	24	23	22	21	20	19	18	17	16	15	14	13	12	11	10	9	8	7	6	5	4	3	2	1	0
KEY																															
R/W-0h																															

LEGEND: R/W = Read/Write; R = Read only; W1toCl = Write 1 to clear bit; *-n* = value after reset

Table 17-4. AES_KEY2_6 Register Field Descriptions

Bit	Field	Type	Reset	Description
31-0	KEY	R/W	0h	Key data

17.4.2 AES_KEY2_7 Register (Offset = 4h) [reset = 0h]

AES_KEY2_7 is shown in Figure 17-15 and described in Table 17-5.

Return to Summary Table.

XTS second key (MSW for 256-bit key), CBC-MAC third key (MSW).

Figure 17-15. AES_KEY2_7 Register

31	30	29	28	27	26	25	24	23	22	21	20	19	18	17	16	15	14	13	12	11	10	9	8	7	6	5	4	3	2	1	0
KEY																															
R/W-0h																															

LEGEND: R/W = Read/Write; R = Read only; W1toCl = Write 1 to clear bit; *-n* = value after reset

Table 17-5. AES_KEY2_7 Register Field Descriptions

Bit	Field	Type	Reset	Description
31-0	KEY	R/W	0h	Key data

Copyright © 2017, Texas Instruments Incorporated

17.4.3 AES_KEY2_4 Register (Offset = 8h) [reset = 0h]

AES_KEY2_4 is shown in Figure 17-16 and described in Table 17-6.

Return to Summary Table.

XTS/CCM second key, CBC-MAC third key (LSW).

Figure 17-16. AES_KEY2_4 Register

31	30	29	28	27	26	25	24	23	22	21	20	19	18	17	16	15	14	13	12	11	10	9	8	7	6	5	4	3	2	1	0
KEY																															
R/W-0h																															

LEGEND: R/W = Read/Write; R = Read only; W1toCl = Write 1 to clear bit; *-n* = value after reset

Table 17-6. AES_KEY2_4 Register Field Descriptions

Bit	Field	Type	Reset	Description
31-0	KEY	R/W	0h	Key data

17.4.4 AES_KEY2_5 Register (Offset = Ch) [reset = 0h]

AES_KEY2_5 is shown in Figure 17-17 and described in Table 17-7.

Return to Summary Table.

XTS second key (MSW for 192-bit key), CBC-MAC third key.

Figure 17-17. AES_KEY2_5 Register

31	30	29	28	27	26	25	24	23	22	21	20	19	18	17	16	15	14	13	12	11	10	9	8	7	6	5	4	3	2	1	0
KEY																															
R/W-0h																															

LEGEND: R/W = Read/Write; R = Read only; W1toCl = Write 1 to clear bit; *-n* = value after reset

Table 17-7. AES_KEY2_5 Register Field Descriptions

Bit	Field	Type	Reset	Description
31-0	KEY	R/W	0h	Key data

Copyright © 2017, Texas Instruments Incorporated

17.4.5 AES_KEY2_2 Register (Offset = 10h) [reset = 0h]

AES_KEY2_2 is shown in Figure 17-18 and described in Table 17-8.

Return to Summary Table.

XTS/CCM/CBC-MAC second key, hash key input

Figure 17-18. AES_KEY2_2 Register

31	30	29	28	27	26	25	24	23	22	21	20	19	18	17	16	15	14	13	12	11	10	9	8	7	6	5	4	3	2	1	0
KEY																															
R/W-0h																															

LEGEND: R/W = Read/Write; R = Read only; W1toCl = Write 1 to clear bit; *-n* = value after reset

Table 17-8. AES_KEY2_2 Register Field Descriptions

Bit	Field	Type	Reset	Description
31-0	KEY	R/W	0h	Key data

17.4.6 AES_KEY2_3 Register (Offset = 14h) [reset = 0h]

AES_KEY2_3 is shown in Figure 17-19 and described in Table 17-9.

Return to Summary Table.

XTS second key (MSW for 128-bit key), CCM/CBC-MAC second key (MSW), hash key input (MSW).

Figure 17-19. AES_KEY2_3 Register

31	30	29	28	27	26	25	24	23	22	21	20	19	18	17	16	15	14	13	12	11	10	9	8	7	6	5	4	3	2	1	0
KEY																															
R/W-0h																															

LEGEND: R/W = Read/Write; R = Read only; W1toCl = Write 1 to clear bit; *-n* = value after reset

Table 17-9. AES_KEY2_3 Register Field Descriptions

Bit	Field	Type	Reset	Description
31-0	KEY	R/W	0h	Key data

Copyright © 2017, Texas Instruments Incorporated

17.4.7 AES_KEY2_0 Register (Offset = 18h) [reset = 0h]

AES_KEY2_0 is shown in Figure 17-20 and described in Table 17-10.

Return to Summary Table.

XTS/CCM/CBC-MAC second key (LSW), hash key input (LSW).

Figure 17-20. AES_KEY2_0 Register

31	30	29	28	27	26	25	24	23	22	21	20	19	18	17	16	15	14	13	12	11	10	9	8	7	6	5	4	3	2	1	0
KEY																															
R/W-0h																															

LEGEND: R/W = Read/Write; R = Read only; W1toCl = Write 1 to clear bit; *-n* = value after reset

Table 17-10. AES_KEY2_0 Register Field Descriptions

Bit	Field	Type	Reset	Description
31-0	KEY	R/W	0h	Key data

17.4.8 AES_KEY2_1 Register (Offset = 1Ch) [reset = 0h]

AES_KEY2_1 is shown in Figure 17-21 and described in Table 17-11.

Return to Summary Table.

XTS/CCM/CBC-MAC second key (LSW), hash key input.

Figure 17-21. AES_KEY2_1 Register

31	30	29	28	27	26	25	24	23	22	21	20	19	18	17	16	15	14	13	12	11	10	9	8	7	6	5	4	3	2	1	0
KEY																															
R/W-0h																															

LEGEND: R/W = Read/Write; R = Read only; W1toCl = Write 1 to clear bit; *-n* = value after reset

Table 17-11. AES_KEY2_1 Register Field Descriptions

Bit	Field	Type	Reset	Description
31-0	KEY	R/W	0h	Key data

Copyright © 2017, Texas Instruments Incorporated

17.4.9 AES_KEY1_6 Register (Offset = 20h) [reset = 0h]

AES_KEY1_6 is shown in Figure 17-22 and described in Table 17-12.

Return to Summary Table.

Key (LSW for 256-bit key)

Figure 17-22. AES_KEY1_6 Register

31	30	29	28	27	26	25	24	23	22	21	20	19	18	17	16	15	14	13	12	11	10	9	8	7	6	5	4	3	2	1	0
KEY																															
R/W-0h																															

LEGEND: R/W = Read/Write; R = Read only; W1toCl = Write 1 to clear bit; *-n* = value after reset

Table 17-12. AES_KEY1_6 Register Field Descriptions

Bit	Field	Type	Reset	Description
31-0	KEY	R/W	0h	Key data

17.4.10 AES_KEY1_7 Register (Offset = 24h) [reset = 0h]

AES_KEY1_7 is shown in Figure 17-23 and described in Table 17-13.

Return to Summary Table.

Key (MSW for 256-bit key)

Figure 17-23. AES_KEY1_7 Register

31	30	29	28	27	26	25	24	23	22	21	20	19	18	17	16	15	14	13	12	11	10	9	8	7	6	5	4	3	2	1	0
KEY																															
R/W-0h																															

LEGEND: R/W = Read/Write; R = Read only; W1toCl = Write 1 to clear bit; *-n* = value after reset

Table 17-13. AES_KEY1_7 Register Field Descriptions

Bit	Field	Type	Reset	Description
31-0	KEY	R/W	0h	Key data

Copyright © 2017, Texas Instruments Incorporated

17.4.11 AES_KEY1_4 Register (Offset = 28h) [reset = 0h]

AES_KEY1_4 is shown in Figure 17-24 and described in Table 17-14.

Return to Summary Table.

Key (LSW for 192-bit key)

Figure 17-24. AES_KEY1_4 Register

31	30	29	28	27	26	25	24	23	22	21	20	19	18	17	16	15	14	13	12	11	10	9	8	7	6	5	4	3	2	1	0
KEY																															
R/W-0h																															

LEGEND: R/W = Read/Write; R = Read only; W1toCl = Write 1 to clear bit; *-n* = value after reset

Table 17-14. AES_KEY1_4 Register Field Descriptions

Bit	Field	Type	Reset	Description
31-0	KEY	R/W	0h	Key data

17.4.12 AES_KEY1_5 Register (Offset = 2Ch) [reset = 0h]

AES_KEY1_5 is shown in Figure 17-25 and described in Table 17-15.

Return to Summary Table.

Key (MSW for 192-bit key)

Figure 17-25. AES_KEY1_5 Register

31	30	29	28	27	26	25	24	23	22	21	20	19	18	17	16	15	14	13	12	11	10	9	8	7	6	5	4	3	2	1	0
KEY																															
R/W-0h																															

LEGEND: R/W = Read/Write; R = Read only; W1toCl = Write 1 to clear bit; *-n* = value after reset

Table 17-15. AES_KEY1_5 Register Field Descriptions

Bit	Field	Type	Reset	Description
31-0	KEY	R/W	0h	Key data

Copyright © 2017, Texas Instruments Incorporated

17.4.13 AES_KEY1_2 Register (Offset = 30h) [reset = 0h]

AES_KEY1_2 is shown in Figure 17-26 and described in Table 17-16.

Return to Summary Table.

Key

Figure 17-26. AES_KEY1_2 Register

31	30	29	28	27	26	25	24	23	22	21	20	19	18	17	16	15	14	13	12	11	10	9	8	7	6	5	4	3	2	1	0
KEY																															
R/W-0h																															

LEGEND: R/W = Read/Write; R = Read only; W1toCl = Write 1 to clear bit; *-n* = value after reset

Table 17-16. AES_KEY1_2 Register Field Descriptions

Bit	Field	Type	Reset	Description
31-0	KEY	R/W	0h	Key data

17.4.14 AES_KEY1_3 Register (Offset = 34h) [reset = 0h]

AES_KEY1_3 is shown in Figure 17-27 and described in Table 17-17.

Return to Summary Table.

Key (MSW for 128-bit key)

Figure 17-27. AES_KEY1_3 Register

31	30	29	28	27	26	25	24	23	22	21	20	19	18	17	16	15	14	13	12	11	10	9	8	7	6	5	4	3	2	1	0
KEY																															
R/W-0h																															

LEGEND: R/W = Read/Write; R = Read only; W1toCl = Write 1 to clear bit; *-n* = value after reset

Table 17-17. AES_KEY1_3 Register Field Descriptions

Bit	Field	Type	Reset	Description
31-0	KEY	R/W	0h	Key data

Copyright © 2017, Texas Instruments Incorporated

17.4.15 AES_KEY1_0 Register (Offset = 38h) [reset = 0h]

AES_KEY1_0 is shown in Figure 17-28 and described in Table 17-18.

Return to Summary Table.

Key (LSW for 128-bit key)

Figure 17-28. AES_KEY1_0 Register

31	30	29	28	27	26	25	24	23	22	21	20	19	18	17	16	15	14	13	12	11	10	9	8	7	6	5	4	3	2	1	0
KEY																															
R/W-0h																															

LEGEND: R/W = Read/Write; R = Read only; W1toCl = Write 1 to clear bit; *-n* = value after reset

Table 17-18. AES_KEY1_0 Register Field Descriptions

Bit	Field	Type	Reset	Description
31-0	KEY	R/W	0h	Key data

17.4.16 AES_KEY1_1 Register (Offset = 3Ch) [reset = 0h]

AES_KEY1_1 is shown in Figure 17-29 and described in Table 17-19.

Return to Summary Table.

Key

Figure 17-29. AES_KEY1_1 Register

31	30	29	28	27	26	25	24	23	22	21	20	19	18	17	16	15	14	13	12	11	10	9	8	7	6	5	4	3	2	1	0
KEY																															
R/W-0h																															

LEGEND: R/W = Read/Write; R = Read only; W1toCl = Write 1 to clear bit; *-n* = value after reset

Table 17-19. AES_KEY1_1 Register Field Descriptions

Bit	Field	Type	Reset	Description
31-0	KEY	R/W	0h	Key data

Copyright © 2017, Texas Instruments Incorporated

17.4.17 AES_IV_IN_0 Register (Offset = 40h) [reset = 0h]

AES_IV_IN_0 is shown in Figure 17-30 and described in Table 17-20.

Return to Summary Table.

Initialization vector input (LSW)

Figure 17-30. AES_IV_IN_0 Register

31	30	29	28	27	26	25	24	23	22	21	20	19	18	17	16	15	14	13	12	11	10	9	8	7	6	5	4	3	2	1	0
DATA																															
R/W-0h																															

LEGEND: R/W = Read/Write; R = Read only; W1toCl = Write 1 to clear bit; *-n* = value after reset

Table 17-20. AES_IV_IN_0 Register Field Descriptions

Bit	Field	Type	Reset	Description
31-0	DATA	R/W	0h	IV data

17.4.18 AES_IV_IN_1 Register (Offset = 44h) [reset = 0h]

AES_IV_IN_1 is shown in Figure 17-31 and described in Table 17-21.

Return to Summary Table.

Initialization vector input

Figure 17-31. AES_IV_IN_1 Register

31	30	29	28	27	26	25	24	23	22	21	20	19	18	17	16	15	14	13	12	11	10	9	8	7	6	5	4	3	2	1	0
DATA																															
R/W-0h																															

LEGEND: R/W = Read/Write; R = Read only; W1toCl = Write 1 to clear bit; *-n* = value after reset

Table 17-21. AES_IV_IN_1 Register Field Descriptions

Bit	Field	Type	Reset	Description
31-0	DATA	R/W	0h	IV data

Copyright © 2017, Texas Instruments Incorporated

17.4.19 AES_IV_IN_2 Register (Offset = 48h) [reset = 0h]

AES_IV_IN_2 is shown in Figure 17-32 and described in Table 17-22.

Return to Summary Table.

Initialization vector input

Figure 17-32. AES_IV_IN_2 Register

31	30	29	28	27	26	25	24	23	22	21	20	19	18	17	16	15	14	13	12	11	10	9	8	7	6	5	4	3	2	1	0
DATA																															
R/W-0h																															

LEGEND: R/W = Read/Write; R = Read only; W1toCl = Write 1 to clear bit; *-n* = value after reset

Table 17-22. AES_IV_IN_2 Register Field Descriptions

Bit	Field	Type	Reset	Description
31-0	DATA	R/W	0h	IV data

17.4.20 AES_IV_IN_3 Register (Offset = 4Ch) [reset = 0h]

AES_IV_IN_3 is shown in Figure 17-33 and described in Table 17-23.

Return to Summary Table.

Initialization vector input (MSW)

Figure 17-33. AES_IV_IN_3 Register

31	30	29	28	27	26	25	24	23	22	21	20	19	18	17	16	15	14	13	12	11	10	9	8	7	6	5	4	3	2	1	0
DATA																															
R/W-0h																															

LEGEND: R/W = Read/Write; R = Read only; W1toCl = Write 1 to clear bit; *-n* = value after reset

Table 17-23. AES_IV_IN_3 Register Field Descriptions

Bit	Field	Type	Reset	Description
31-0	DATA	R/W	0h	IV data

Copyright © 2017, Texas Instruments Incorporated

17.4.21 AES_CTRL Register (Offset = 50h) [reset = X]

AES_CTRL is shown in Figure 17-34 and described in Table 17-24.

Return to Summary Table.

Determines the mode of operation of the AES engine.

Figure 17-34. AES_CTRL Register

31	30	29	28	27	26	25	24
CONTEXT_READY	SAVE_CONTEXT_READY	SAVE_CONTEXT	RESERVED				CCM_M
RO-1h	RO-0h	R/W-0h	R-X				R/W-0h
23	22	21	20	19	18	17	16
CCM_M			CCM_L		CCM	GCM	
R/W-0h			R/W-0h		R/W-0h	R/W-0h	
15	14	13	12	11	10	9	8
CBCMAC	F9	F8	XTS		CFB	ICM	CTR_WIDTH
R/W-0h	R/W-0h	R/W-0h	R/W-0h		R/W-0h	R/W-0h	R/W-0h
7	6	5	4	3	2	1	0
CTR_WIDTH	CTR	MODE	KEY_SIZE		DIRECTION	INPUT_READY	OUTPUT_READY
R/W-0h	R/W-0h	R/W-0h	R/W-0h		R/W-0h	RO-0h	RO-0h

LEGEND: R/W = Read/Write; R = Read only; W1toCl = Write 1 to clear bit; *-n* = value after reset

Table 17-24. AES_CTRL Register Field Descriptions

Bit	Field	Type	Reset	Description
31	CONTEXT_READY	RO	1h	If 1, this read-only status bit indicates that the context data registers can be overwritten, and the host is permitted to write the next context.
30	SAVE_CONTEXT_READY	RO	0h	If 1, this read-only status bit indicates that an AES authentication TAG or IV blocks are available for the host to retrieve. This bit is only asserted if the 'save_context' bit is set to 1. The bit is mutually exclusive with the 'context_ready' bit.
29	SAVE_CONTEXT	R/W	0h	This bit indicates that an authentication TAG or result IV must be stored as a result context. If this bit is set, context output DMA or interrupt are asserted if the operation is finished and related signals are enabled.
28-25	RESERVED	R	X	
24-22	CCM_M	R/W	0h	Defines "M" that indicated the length of the authentication field for CCM operations; the authentication field length equals two times (the value of CCM-M plus one). The AES engine always returns a 128-bit authentication field, of which the M least significant bytes are valid. All values are supported.
21-19	CCM_L	R/W	0h	Defines "L" that indicated the width of the length field for CCM operations; the length field in bytes equals the value of CMM-L plus one. Supported values for L are (programmed value): 2 (1), 4 (3) and 8 (7).
18	CCM	R/W	0h	AES-CCM is selected; this is a combined mode, using AES for both authentication and encryption. No additional mode selection is required. 0h = Other mode selected 1h = CCM mode selected

Copyright © 2017, Texas Instruments Incorporated

Table 17-24. AES_CTRL Register Field Descriptions (continued)

Bit	Field	Type	Reset	Description
17-16	GCM	R/W	0h	AES-GCM mode is selected; this is a combined mode, using the Galois field multiplier GF(2^{128}) for authentication and AES-CTR mode for encryption, the bits specify the GCM mode. 0h = No operation 1h = GHASH with H loaded and Y0-encrypted forced to zero 2h = GHASH with H loaded and Y0-encrypted calculated internally 3h = Autonomous GHASH (both H and Y0-encrypted calculated internally)
15	CBCMAC	R/W	0h	AES-CBC MAC is selected; the Direction bit must be set to 1 for this mode. 0h = Other mode selected 1h = CBCMAC mode selected
14	F9	R/W	0h	AES f9 mode is selected; the AES key size must be set to 128-bit for this mode. 0h = Other mode selected 1h = f9 selected
13	F8	R/W	0h	AES f8 mode is selected; the AES key size must be set to 128-bit for this mode. 0h = Other mode selected 1h = f8 selected
12-11	XTS	R/W	0h	AES-XTS operation is selected; the bits specify the XTS mode. 0h = No operation 1h = Previous/intermediate tweak value and j loaded (value is loaded through IV, j is loaded through the AAD length register) 2h = Key2, i and j loaded (i is loaded through IV, j is loaded through the AAD length register) 3h = Key2 and i loaded, j=0 (i is loaded through IV)
10	CFB	R/W	0h	Full block AES cipher feedback mode (CFB128) is selected. 0h = Other mode selected 1h = CFB selected
9	ICM	R/W	0h	AES integer counter mode (ICM) is selected, this is a counter mode with a 16-bit wide counter. 0h = Other mode selected 1h = ICM mode selected
8-7	CTR_WIDTH	R/W	0h	Specifies the counter width for AES-CTR mode 0h = Counter is 32 bits 1h = Counter is 64 bits 2h = Counter is 128 bits 3h = Counter is 192 bits
6	CTR	R/W	0h	This bit must also be set for GCM and CCM, when encryption or decryption is required. 0h = Other mode selected 1h = Counter mode
5	MODE	R/W	0h	ECB/CBC mode 0h = ECB mode 1h = CBC mode
4-3	KEY_SIZE	R/W	0h	Key Size 0h = Reserved 1h = Key is 128 bits 2h = Key is 192 bits 3h = Key is 256

Copyright © 2017, Texas Instruments Incorporated

Table 17-24. AES_CTRL Register Field Descriptions (continued)

Bit	Field	Type	Reset	Description
2	DIRECTION	R/W	0h	If set to 1, an encrypt operation is performed. If set to 0, a decrypt operation is performed. 0h = Decryption is selected 1h = Encryption is selected
1	INPUT_READY	RO	0h	If 1, this read-only status bit indicates that the 16-byte input buffer is empty, and the host is permitted to write the next block of data.
0	OUTPUT_READY	RO	0h	If 1, this read-only status bit indicates that an AES output block is available for the host to retrieve.

Copyright © 2017, Texas Instruments Incorporated

17.4.22 AES_C_LENGTH_0 Register (Offset = 54h) [reset = 0h]

AES_C_LENGTH_0 is shown in Figure 17-35 and described in Table 17-25.

Return to Summary Table.

Crypto data length registers (LSW and MSW) store the cryptographic data length in bytes for all modes. Once processing with this context is started, this length decrements to zero. Data lengths up to (2^61 – 1) bytes are allowed.

For GCM, any value up to 2^36 - 32 bytes can be used. This is because a 32-bit counter mode is used; the maximum number of 128-bit blocks is 2^32 – 2, resulting in a maximum number of bytes of 2^36 - 32.

A write to this register triggers the engine to start using this context. This is valid for all modes except GCM and CCM.

For the combined modes, this length does not include the authentication-only data; the authentication length is specified in the AES_AUTH_LENGTH register below.

All modes must have a length > 0. For the combined modes, it is allowed to have one of the lengths equal to zero.

For the basic encryption modes (ECB/CBC/CTR/ICM/CFB128) it is allowed to program zero to the length field; in that case the length is assumed infinite.

All data must be byte (8-bit) aligned; bit aligned data streams are not supported by the AES Engine.

For a host read operation, these registers return all-zeroes.

Figure 17-35. AES_C_LENGTH_0 Register

31	30	29	28	27	26	25	24	23	22	21	20	19	18	17	16	15	14	13	12	11	10	9	8	7	6	5	4	3	2	1	0
LENGTH																															
R/W-0h																															

LEGEND: R/W = Read/Write; R = Read only; W1toCl = Write 1 to clear bit; *-n* = value after reset

Table 17-25. AES_C_LENGTH_0 Register Field Descriptions

Bit	Field	Type	Reset	Description
31-0	LENGTH	R/W	0h	Data length (LSW)

Copyright © 2017, Texas Instruments Incorporated

17.4.23 AES_C_LENGTH_1 Register (Offset = 58h) [reset = X]

AES_C_LENGTH_1 is shown in Figure 17-36 and described in Table 17-26.

Return to Summary Table.

Crypto data length registers (LSW and MSW) store the cryptographic data length in bytes for all modes. Once processing with this context is started, this length decrements to zero. Data lengths up to (2^61 – 1) bytes are allowed.

For GCM, any value up to 2^36 - 32 bytes can be used. This is because a 32-bit counter mode is used; the maximum number of 128-bit blocks is 2^32 – 2, resulting in a maximum number of bytes of 2^36 - 32.

A write to this register triggers the engine to start using this context. This is valid for all modes except GCM and CCM.

For the combined modes, this length does not include the authentication-only data; the authentication length is specified in the AES_AUTH_LENGTH register below.

All modes must have a length > 0. For the combined modes, it is allowed to have one of the lengths equal to zero.

For the basic encryption modes (ECB/CBC/CTR/ICM/CFB128) it is allowed to program zero to the length field; in that case the length is assumed infinite.

All data must be byte (8-bit) aligned; bit aligned data streams are not supported by the AES Engine.

For a host read operation, these registers return all-zeroes.

Figure 17-36. AES_C_LENGTH_1 Register

31	30	29	28	27	26	25	24	23	22	21	20	19	18	17	16
RESERVED			LENGTH												
R-X			R/W-0h												
15	14	13	12	11	10	9	8	7	6	5	4	3	2	1	0
LENGTH															
R/W-0h															

LEGEND: R/W = Read/Write; R = Read only; W1toCl = Write 1 to clear bit; *-n* = value after reset

Table 17-26. AES_C_LENGTH_1 Register Field Descriptions

Bit	Field	Type	Reset	Description
31-29	RESERVED	R	X	
28-0	LENGTH	R/W	0h	Data length (MSW)

Copyright © 2017, Texas Instruments Incorporated

17.4.24 AES_AUTH_LENGTH Register (Offset = 5Ch) [reset = 0h]

AES_AUTH_LENGTH is shown in Figure 17-37 and described in Table 17-27.

Return to Summary Table.

AAD data length. The authentication length register store the authentication data length in bytes for combined modes only (GCM or CCM).

Supported AAD-lengths for CCM are from 0 to (2^16 - 2^8) bytes. For GCM any value up to (2^32 - 1) bytes can be used. Once processing with this context is started, this length decrements to zero.

A write to this register triggers the engine to start using this context for GCM and CCM. For XTS this register is optionally used to load ‘j’. Loading of ‘j’ is only required if ‘j’ != 0. ‘j’ is a 28-bit value and must be written to bits [31-4] of this register. ‘j’ represents the sequential number of the 128-bit block inside the data unit. For the first block in a unit, this value is zero. It is not required to provide a ‘j’ for each new data block within a unit. Note that it is possible to start with a ‘j’ unequal to zero; refer to **Table 4** for more details. For a Host read operation, these registers return all-zeroes.

Figure 17-37. AES_AUTH_LENGTH Register

31	30	29	28	27	26	25	24	23	22	21	20	19	18	17	16	15	14	13	12	11	10	9	8	7	6	5	4	3	2	1	0
AUTH																															
R/W-0h																															

LEGEND: R/W = Read/Write; R = Read only; W1toCl = Write 1 to clear bit; *-n* = value after reset

Table 17-27. AES_AUTH_LENGTH Register Field Descriptions

Bit	Field	Type	Reset	Description
31-0	AUTH	R/W	0h	Data

Copyright © 2017, Texas Instruments Incorporated

17.4.25 AES_DATA_IN_0 Register (Offset = 60h) [reset = 0h]

AES_DATA_IN_0 is shown in Figure 17-38 and described in Table 17-28.

Return to Summary Table.

Data register to read and write plaintext and ciphertext (MSW).

Figure 17-38. AES_DATA_IN_0 Register

31	30	29	28	27	26	25	24	23	22	21	20	19	18	17	16	15	14	13	12	11	10	9	8	7	6	5	4	3	2	1	0
DATA																															
R/W-0h																															

LEGEND: R/W = Read/Write; R = Read only; W1toCl = Write 1 to clear bit; *-n* = value after reset

Table 17-28. AES_DATA_IN_0 Register Field Descriptions

Bit	Field	Type	Reset	Description
31-0	DATA	R/W	0h	Data to encrypt or decrypt

17.4.26 AES_DATA_IN_1 Register (Offset = 64h) [reset = 0h]

AES_DATA_IN_1 is shown in Figure 17-39 and described in Table 17-29.

Return to Summary Table.

Data register to read and write plaintext and ciphertext.

Figure 17-39. AES_DATA_IN_1 Register

31	30	29	28	27	26	25	24	23	22	21	20	19	18	17	16	15	14	13	12	11	10	9	8	7	6	5	4	3	2	1	0
DATA																															
R/W-0h																															

LEGEND: R/W = Read/Write; R = Read only; W1toCl = Write 1 to clear bit; *-n* = value after reset

Table 17-29. AES_DATA_IN_1 Register Field Descriptions

Bit	Field	Type	Reset	Description
31-0	DATA	R/W	0h	Data to encrypt or decrypt

Copyright © 2017, Texas Instruments Incorporated

17.4.27 AES_DATA_IN_2 Register (Offset = 68h) [reset = 0h]

AES_DATA_IN_2 is shown in Figure 17-40 and described in Table 17-30.

Return to Summary Table.

Data register to read and write plaintext and ciphertext.

Figure 17-40. AES_DATA_IN_2 Register

31	30	29	28	27	26	25	24	23	22	21	20	19	18	17	16	15	14	13	12	11	10	9	8	7	6	5	4	3	2	1	0
DATA																															
R/W-0h																															

LEGEND: R/W = Read/Write; R = Read only; W1toCl = Write 1 to clear bit; *-n* = value after reset

Table 17-30. AES_DATA_IN_2 Register Field Descriptions

Bit	Field	Type	Reset	Description
31-0	DATA	R/W	0h	Data to encrypt or decrypt

17.4.28 AES_DATA_IN_3 Register (Offset = 6Ch) [reset = 0h]

AES_DATA_IN_3 is shown in Figure 17-41 and described in Table 17-31.

Return to Summary Table.

Data register to read and write plaintext and ciphertext (LSW).

Figure 17-41. AES_DATA_IN_3 Register

31	30	29	28	27	26	25	24	23	22	21	20	19	18	17	16	15	14	13	12	11	10	9	8	7	6	5	4	3	2	1	0
DATA																															
R/W-0h																															

LEGEND: R/W = Read/Write; R = Read only; W1toCl = Write 1 to clear bit; *-n* = value after reset

Table 17-31. AES_DATA_IN_3 Register Field Descriptions

Bit	Field	Type	Reset	Description
31-0	DATA	R/W	0h	Data to encrypt or decrypt

Copyright © 2017, Texas Instruments Incorporated

17.4.29 AES_TAG_OUT_0 Register (Offset = 70h) [reset = 0h]

AES_TAG_OUT_0 is shown in Figure 17-42 and described in Table 17-32.

Return to Summary Table.

Figure 17-42. AES_TAG_OUT_0 Register

31	30	29	28	27	26	25	24	23	22	21	20	19	18	17	16	15	14	13	12	11	10	9	8	7	6	5	4	3	2	1	0
HASH																															
R/W-0h																															

LEGEND: R/W = Read/Write; R = Read only; W1toCl = Write 1 to clear bit; *-n* = value after reset

Table 17-32. AES_TAG_OUT_0 Register Field Descriptions

Bit	Field	Type	Reset	Description
31-0	HASH	R/W	0h	Hash result (MSW)

17.4.30 AES_TAG_OUT_1 Register (Offset = 74h) [reset = 0h]

AES_TAG_OUT_1 is shown in Figure 17-43 and described in Table 17-33.

Return to Summary Table.

Figure 17-43. AES_TAG_OUT_1 Register

31	30	29	28	27	26	25	24	23	22	21	20	19	18	17	16	15	14	13	12	11	10	9	8	7	6	5	4	3	2	1	0
HASH																															
R/W-0h																															

LEGEND: R/W = Read/Write; R = Read only; W1toCl = Write 1 to clear bit; *-n* = value after reset

Table 17-33. AES_TAG_OUT_1 Register Field Descriptions

Bit	Field	Type	Reset	Description
31-0	HASH	R/W	0h	Hash result (MSW)

Copyright © 2017, Texas Instruments Incorporated

17.4.31 AES_TAG_OUT_2 Register (Offset = 78h) [reset = 0h]

AES_TAG_OUT_2 is shown in Figure 17-44 and described in Table 17-34.

Return to Summary Table.

Figure 17-44. AES_TAG_OUT_2 Register

31	30	29	28	27	26	25	24	23	22	21	20	19	18	17	16	15	14	13	12	11	10	9	8	7	6	5	4	3	2	1	0
HASH																															
R/W-0h																															

LEGEND: R/W = Read/Write; R = Read only; W1toCl = Write 1 to clear bit; *-n* = value after reset

Table 17-34. AES_TAG_OUT_2 Register Field Descriptions

Bit	Field	Type	Reset	Description
31-0	HASH	R/W	0h	Hash result (MSW)

17.4.32 AES_TAG_OUT_3 Register (Offset = 7Ch) [reset = 0h]

AES_TAG_OUT_3 is shown in Figure 17-45 and described in Table 17-35.

Return to Summary Table.

Figure 17-45. AES_TAG_OUT_3 Register

31	30	29	28	27	26	25	24	23	22	21	20	19	18	17	16	15	14	13	12	11	10	9	8	7	6	5	4	3	2	1	0
HASH																															
R/W-0h																															

LEGEND: R/W = Read/Write; R = Read only; W1toCl = Write 1 to clear bit; *-n* = value after reset

Table 17-35. AES_TAG_OUT_3 Register Field Descriptions

Bit	Field	Type	Reset	Description
31-0	HASH	R/W	0h	Hash result (LSW)

Copyright © 2017, Texas Instruments Incorporated

17.4.33 AES_REVISION Register (Offset = 80h) [reset = X]

AES_REVISION is shown in Figure 17-46 and described in Table 17-36.

Return to Summary Table.

Figure 17-46. AES_REVISION Register

31	30	29	28	27	26	25	24
SCHEME		RESERVED		FUNC			
RO-0h		R-X		RO-0h			
23	22	21	20	19	18	17	16
FUNC							
RO-0h							
15	14	13	12	11	10	9	8
R_RTL					X_MAJOR		
RO-0h					RO-0h		
7	6	5	4	3	2	1	0
CUSTOM		Y_MINOR					
RO-0h		RO-0h					

LEGEND: R/W = Read/Write; R = Read only; W1toCl = Write 1 to clear bit; *-n* = value after reset

Table 17-36. AES_REVISION Register Field Descriptions

Bit	Field	Type	Reset	Description
31-30	SCHEME	RO	0h	Used to distinguish between old scheme and current. 0h = (Read): Legacy ASP or WTBU scheme 1h = (Read): Highlander 0.8 scheme
29-28	RESERVED	R	X	
27-16	FUNC	RO	0h	Function indicates a software compatible module family. If there is no level of software compatibility, a new Func number (and hence REVISION) should be assigned.
15-11	R_RTL	RO	0h	RTL Version (R), maintained by IP design owner. RTL follows a numbering such as X.Y.R.Z which are explained in this table. R changes ONLY when: (1) PDS uploads occur which may have been due to spec changes (2) Bug fixes occur (3) Resets to 0 when X or Y changes. Design team has an internal Z (customer-invisible) number which increments on every drop that happens due to DV and RTL updates. Z resets to 0 when R increments.
10-8	X_MAJOR	RO	0h	Major Revision (X), maintained by IP specification owner. X changes ONLY when: (1) There is a major feature addition. An example would be adding master mode to Utopia Level2. The Func field (or class/type in old PID format) remains the same. X does NOT change due to: (1) Bug fixes (2) Change in feature parameters.
7-6	CUSTOM	RO	0h	Indicates a special version for a particular device. Consequence of use may avoid use of standard Chip Support Library (CSL) / Drivers. 0h = (Read): Non-custom (standard) revision

Copyright © 2017, Texas Instruments Incorporated

Table 17-36. AES_REVISION Register Field Descriptions (continued)

Bit	Field	Type	Reset	Description
5-0	Y_MINOR	RO	0h	Minor Revision (Y), maintained by IP specification owner. Y changes ONLY when: (1) Features are scaled (up or down). Flexibility exists in that this feature scalability may either be represented in the Y change or a specific register in the IP that indicates which features are exactly available. (2) When feature creeps from Is-Not list to Is list. But this may not be the case once it sees silicon; in which case X changes. Y does NOT change due to: (1) Bug fixes (2) Typos or clarifications (3) major functional or feature changes, additions, and deletions. Instead, these changes may be reflected through R, S, and X, as applicable. Spec owner maintains a customer-invisible number 'S' which changes due to: (1) Typos and clarifications (2) Bug documentation. Note that this bug is not due to a spec change but due to implementation. Nevertheless, the spec tracks the IP bugs. An RTL release (say for silicon PG1.1) that occurs due to bug fix should document the corresponding spec number (X.Y.S) in its release notes.

Copyright © 2017, Texas Instruments Incorporated

17.4.34 AES_SYSCONFIG Register (Offset = 84h) [reset = X]

AES_SYSCONFIG is shown in Figure 17-47 and described in Table 17-37.

Return to Summary Table.

This register configures the DMA signals.

Figure 17-47. AES_SYSCONFIG Register

31	30	29	28	27	26	25	24
RESERVED							
R-X							
23	22	21	20	19	18	17	16
RESERVED							
R-X							
15	14	13	12	11	10	9	8
RESERVED						MAP_CONTEXT_OUT_ON_DATA_OUT	DMA_REQ_CONTEXT_OUT_EN
R-X						R/W-0h	R/W-0h
7	6	5	4	3	2	1	0
DMA_REQ_CONTEXT_IN_EN	DMA_REQ_DATA_OUT_EN	DMA_REQ_DATA_IN_EN	RESERVED				
R/W-0h	R/W-0h	R/W-0h	R-X				

LEGEND: R/W = Read/Write; R = Read only; W1toCl = Write 1 to clear bit; *-n* = value after reset

Table 17-37. AES_SYSCONFIG Register Field Descriptions

Bit	Field	Type	Reset	Description
31-10	RESERVED	R	X	
9	MAP_CONTEXT_OUT_ON_DATA_OUT	R/W	0h	If set to 1, the two context out requests (dma_req_context_out_en, Bit [8] above, and context_out interrupt enable, Bit [3] of AES_IRQENABLE register) are mapped on the corresponding data output request bit. In this case, the original 'context out' bit values are ignored.
8	DMA_REQ_CONTEXT_OUT_EN	R/W	0h	If set to 1, the DMA context output request is enabled (for context data out, for example, TAG for authentication modes). 0h = DMA disabled 1h = DMA enabled
7	DMA_REQ_CONTEXT_IN_EN	R/W	0h	If set to 1, the DMA context request is enabled. 0h = DMA disabled 1h = DMA enabled
6	DMA_REQ_DATA_OUT_EN	R/W	0h	If set to 1, the DMA output request is enabled. 0h = DMA disabled 1h = DMA enabled
5	DMA_REQ_DATA_IN_EN	R/W	0h	If set to 1, the DMA input request is enabled. 0h = DMA disabled 1h = DMA enabled
4-0	RESERVED	R	X	

Copyright © 2017, Texas Instruments Incorporated

17.4.35 AES_IRQSTATUS Register (Offset = 8Ch) [reset = X]

AES_IRQSTATUS is shown in Figure 17-48 and described in Table 17-38.

Return to Summary Table.

This register indicates the interrupt status. If one of the interrupt bits is set, the interrupt output is asserted.

Figure 17-48. AES_IRQSTATUS Register

31	30	29	28	27	26	25	24
RESERVED							
R-X							
23	22	21	20	19	18	17	16
RESERVED							
R-X							
15	14	13	12	11	10	9	8
RESERVED							
R-X							
7	6	5	4	3	2	1	0
RESERVED				CONTEXT_OUT	DATA_OUT	DATA_IN	CONTEXT_IN
R-X				R/W-0h	R/W-0h	R/W-0h	R/W-0h

LEGEND: R/W = Read/Write; R = Read only; W1toCl = Write 1 to clear bit; *-n* = value after reset

Table 17-38. AES_IRQSTATUS Register Field Descriptions

Bit	Field	Type	Reset	Description
31-4	RESERVED	R	X	
3	CONTEXT_OUT	R/W	0h	This bit indicates authentication tag (and IV) interrupts are active, and triggers the interrupt output.
2	DATA_OUT	R/W	0h	This bit indicates data output interrupt is active, and triggers the interrupt output
1	DATA_IN	R/W	0h	This bit indicates data input interrupt is active, and triggers the interrupt output
0	CONTEXT_IN	R/W	0h	This bit indicates context interrupt is active, and triggers the interrupt output.

Copyright © 2017, Texas Instruments Incorporated

17.4.36 AES_IRQENABLE Register (Offset = 90h) [reset = X]

AES_IRQENABLE is shown in Figure 17-49 and described in Table 17-39.

Return to Summary Table.

This register contains an enable bit for each unique interrupt generated by the module. It matches the layout of AES_IRQSTATUS register. An interrupt is enabled when the bit in this register is set to 1. An interrupt that is enabled is propagated to the SINTREQUEST_x output. All interrupts must be enabled explicitly by writing this register.

Figure 17-49. AES_IRQENABLE Register

31	30	29	28	27	26	25	24
RESERVED							
R-X							
23	22	21	20	19	18	17	16
RESERVED							
R-X							
15	14	13	12	11	10	9	8
RESERVED							
R-X							
7	6	5	4	3	2	1	0
RESERVED				CONTEXT_OUT	DATA_OUT	DATA_IN	CONTEXT_IN
R-X				R/W-0h	R/W-0h	R/W-0h	R/W-0h

LEGEND: R/W = Read/Write; R = Read only; W1toCl = Write 1 to clear bit; *-n* = value after reset

Table 17-39. AES_IRQENABLE Register Field Descriptions

Bit	Field	Type	Reset	Description
31-4	RESERVED	R	X	
3	CONTEXT_OUT	R/W	0h	This bit indicates authentication tag (and IV) interrupts are active, and triggers the interrupt output.
2	DATA_OUT	R/W	0h	This bit indicates data output interrupt is active, and triggers the interrupt output
1	DATA_IN	R/W	0h	This bit indicates data input interrupt is active, and triggers the interrupt output
0	CONTEXT_IN	R/W	0h	This bit indicates context interrupt is active, and triggers the interrupt output.

Copyright © 2017, Texas Instruments Incorporated

17.4.37 CRYPTOCLKEN Register (Offset = B8h) [reset = X]

CRYPTOCLKEN is shown in Figure 17-50 and described in Table 17-40.

Return to Summary Table.

Physical address: 0x4402 50B8. CRYPTO_CLK_GATING

Figure 17-50. CRYPTOCLKEN Register

31	30	29	28	27	26	25	24
RESERVED							
R-X							
23	22	21	20	19	18	17	16
RESERVED							
R-X							
15	14	13	12	11	10	9	8
RESERVED							
R-X							
7	6	5	4	3	2	1	0
RESERVED							RUNCLKEN
R-X							R/W-0h

LEGEND: R/W = Read/Write; R = Read only; W1toCl = Write 1 to clear bit; *-n* = value after reset

Table 17-40. CRYPTOCLKEN Register Field Descriptions

Bit	Field	Type	Reset	Description
31-1	RESERVED	R	X	
0	RUNCLKEN	R/W	0h	CRYPTO_RUN_CLK_ENABLE: 0h = Enable the crypto clock during run 1h = Disable the crypto clock during run

Copyright © 2017, Texas Instruments Incorporated

17.4.38 DTHE_AES_IM Register (Offset = 820h) [reset = X]

DTHE_AES_IM is shown in Figure 17-51 and described in Table 17-41.

Return to Summary Table.

The interrupt mask set register controls which interrupt source interrupts the processor.

Figure 17-51. DTHE_AES_IM Register

31	30	29	28	27	26	25	24
RESERVED							
R-X							
23	22	21	20	19	18	17	16
RESERVED							
R-X							
15	14	13	12	11	10	9	8
RESERVED							
R-X							
7	6	5	4	3	2	1	0
RESERVED				Dout	Din	Cout	Cin
R-X				R/W-1h	R/W-1h	R/W-1h	R/W-1h

LEGEND: R/W = Read/Write; R = Read only; W1toCl = Write 1 to clear bit; *-n* = value after reset

Table 17-41. DTHE_AES_IM Register Field Descriptions

Bit	Field	Type	Reset	Description
31-4	RESERVED	R	X	
3	Dout	R/W	1h	Data out: This interrupt is raised when DMA finishes writing last word of the process result.
2	Din	R/W	1h	Data in: This interrupt is raised when DMA writes last word of input data to internal FIFO of the engine.
1	Cout	R/W	1h	Context out: This interrupt is raised when DMA completes the output context movement from internal register.
0	Cin	R/W	1h	Context in: This interrupt is raised when DMA completes context write to internal register.

Copyright © 2017, Texas Instruments Incorporated

17.4.39 DTHE_AES_RIS Register (Offset = 824h) [reset = X]

DTHE_AES_RIS is shown in Figure 17-52 and described in Table 17-42.

Return to Summary Table.

AES Raw Interrupt status register.

Figure 17-52. DTHE_AES_RIS Register

31	30	29	28	27	26	25	24
RESERVED							
R-X							
23	22	21	20	19	18	17	16
RESERVED							
R-X							
15	14	13	12	11	10	9	8
RESERVED							
R-X							
7	6	5	4	3	2	1	0
RESERVED				Dout	Din	Cout	Cin
R-X				R-0h	R-0h	R-0h	R-0h

LEGEND: R/W = Read/Write; R = Read only; W1toCl = Write 1 to clear bit; *-n* = value after reset

Table 17-42. DTHE_AES_RIS Register Field Descriptions

Bit	Field	Type	Reset	Description
31-4	RESERVED	R	X	
3	Dout	R	0h	Output data movement is done
2	Din	R	0h	Input data movement is done
1	Cout	R	0h	Context output is done
0	Cin	R	0h	Context input is done

Copyright © 2017, Texas Instruments Incorporated

17.4.40 DTHE_AES_MIS Register (Offset = 828h) [reset = X]

DTHE_AES_MIS is shown in Figure 17-53 and described in Table 17-43.

Return to Summary Table.

Figure 17-53. DTHE_AES_MIS Register

31	30	29	28	27	26	25	24
RESERVED							
R-X							
23	22	21	20	19	18	17	16
RESERVED							
R-X							
15	14	13	12	11	10	9	8
RESERVED							
R-X							
7	6	5	4	3	2	1	0
RESERVED				Dout	Din	Cout	Cin
R-X				R-0h	R-0h	R-0h	R-0h

LEGEND: R/W = Read/Write; R = Read only; W1toCl = Write 1 to clear bit; *-n* = value after reset

Table 17-43. DTHE_AES_MIS Register Field Descriptions

Bit	Field	Type	Reset	Description
31-4	RESERVED	R	X	
3	Dout	R	0h	Output data movement is done
2	Din	R	0h	Input data movement is done
1	Cout	R	0h	Context output is done
0	Cin	R	0h	Context input is done

Copyright © 2017, Texas Instruments Incorporated

17.4.41 DTHE_AES_IC Register (Offset = 82Ch) [reset = X]

DTHE_AES_IC is shown in Figure 17-54 and described in Table 17-44.

Return to Summary Table.

Figure 17-54. DTHE_AES_IC Register

31	30	29	28	27	26	25	24
RESERVED							
R-X							
23	22	21	20	19	18	17	16
RESERVED							
R-X							
15	14	13	12	11	10	9	8
RESERVED							
R-X							
7	6	5	4	3	2	1	0
RESERVED				Dout	Din	Cout	Cin
R-X				WC-0h	WC-0h	WC-0h	WC-0h

LEGEND: R/W = Read/Write; R = Read only; W1toCl = Write 1 to clear bit; *-n* = value after reset

Table 17-44. DTHE_AES_IC Register Field Descriptions

Bit	Field	Type	Reset	Description
31-4	RESERVED	R	X	
3	Dout	WC	0h	Clear “output data movement done” flag
2	Din	WC	0h	Clear “input data movement done” flag
1	Cout	WC	0h	Clear “context output done” flag
0	Cin	WC	0h	Clear “context input done” flag

Copyright © 2017, Texas Instruments Incorporated

Data Encryption Standard Accelerator (DES)

The DES module provides hardware-accelerated data encryption and decryption functions. The module runs either the single DES or the triple DES (3DES) algorithm in compliance with the FIPS 46-3 standard, and supports electronic codebook (ECB), cipher block chaining (CBC), and cipher feedback (CFB) modes of operation. Output feedback (OFB) mode of operation is not supported in hardware.

The purpose of the DES algorithm is to encrypt (encipher) or decrypt (decipher) binary-coded information. Encrypting data converts it to an unintelligible form called cipher text. Decrypting cipher text converts the data back to its original form called plaintext. DES is a symmetrical algorithm in that the encryption and decryption keys are identical. Each triple DES encrypt or decrypt operation is a compound of DES encrypt and decrypt operations.

The DES accelerator includes the following features:

- DES and 3DES encryption and decryption
- Feedback modes: ECB, CBC, and CFB
- Host interrupt or μDMA-driven modes of operation. μDMA support for data and context in/result out
- Fully synchronous design
- Internal wide-bus interface

Topic **Page**

18.1 DES Functional Description **646**
18.2 DES Block Diagram **646**
18.3 DES-Supported Modes of Operation **648**
18.4 DES Module Programming Guide – Low-Level Programming Models **650**
18.5 DES Registers **655**

Copyright © 2017, Texas Instruments Incorporated

18.1 DES Functional Description

The DES module is an efficient implementation of a DES block cipher. Block ciphers, as opposed to stream ciphers, operate on blocks of plain text and cipher text. The DES block size is 8-byte. The DES key consists of 64 binary digits, but only 56 bits are actually used directly by the algorithm. The other 8 bits are used for error detection.

The 64-bit block of input data to be enciphered is initially permuted, then passed through 16 iterations of a calculation that uses a cipher function, and finally permutated to the inverse of the initial permutation. At each of the 16 iterations, a 48-bit key computed from the 64-bit input key is applied to one of the 32-bit sub-blocks of the 64-bit input block using the cipher function. The 48-bit key value changes for each iteration. The result of the cipher function is a 32-bit sub-block, which is concatenated with the second 32-bit input sub-block. The resulting 64-bit output block of each iteration feeds back as the input of the next iteration. To decipher, it is only necessary to apply the same algorithm to the enciphered message block, taking care that each iteration of the computation will use the same 48-bit key which was used during enciphering.

The triple DES is the DES used three times in a row (also known as DES-EDE). It uses three keys key1, key2, and key3, so that key length is 168 bits effective: a 64-bit block plaintext is encrypted with key1, decrypted with key2, and encrypted with key3, and a 64-bit ciphertext is decrypted with key1, encrypted with key2, and decrypted with key3.

There are three keying options defined in ANSI X9.52 for DES-EDE:

- The three keys, key1, key2, and key3 are independent.
- key1 and key2 are independent, but key1 = key3
- key1 = key2 = key3

The first option provides highest level of security; the last option is compatible with single DES. See Table 18-1 for key use.

Table 18-1. Key Repartition

Mode	Key1_L	Key1_H	Key2_L	Key2_H	Key3_L	Key3_H
64-bit (DES)	√	√	X	X	X	X
192-bit (3DES)	√	√	√	√	√	√

ECB, CBC, and CFB modes can be used with DES and 3DES modes.

18.2 DES Block Diagram

The module architecture consists of primary blocks, as shown in Figure 18-1. The DES module includes a register interface and a μDMA and interrupt interface.

Depending of the availability of context and data, the DES engine is automatically triggered to process the data. The DES engine is directly connected to the context and data registers, such that it can immediately start processing when all data is available.

Packets (blocks of 64 bits) must be parsed into blocks and sequentially fed into the DES, which can buffer the block currently being processed, as well as an additional block that may be queued in advance.

Copyright © 2017, Texas Instruments Incorporated

Figure 18-1. DES Block Diagram

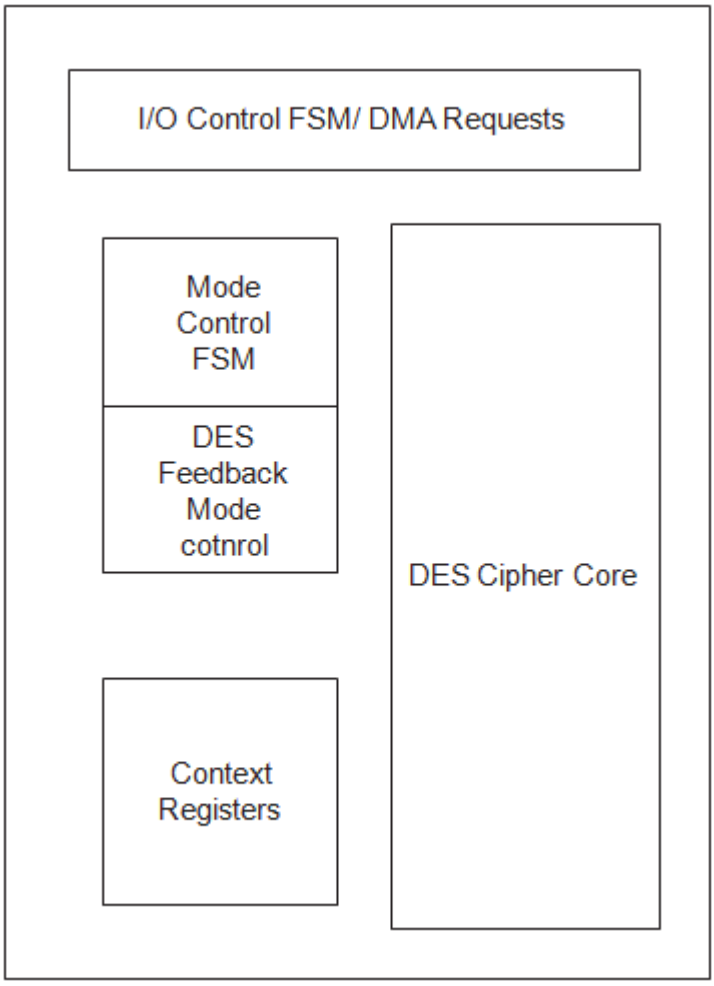

18.2.1 µDMA Control

The µDMA and interrupt request logic is controlled by the DES engine. The DES engine can have multiple µDMA request signals active in parallel.

There are three DMA channels available:

- DMA context in – Request a new context (DES0 Cin)
- DMA data in – Request input data (DES0 Din)
- DMA data out – Request output data read (DES0 Dout)

18.2.2 Interrupt Control

One interrupt for the DES is sent to the interrupt controller. This interrupt is an OR of the enabled interrupt bits in the DES Interrupt Status (DES_IRQSTATUS) register. These bits are enabled through the DES Interrupt Enable (DES_IRQENABLE) register. The following events can generate an interrupt bit to be set in the DES_IRQSTATUS register:

- New context input required
- Data input required
- Data output ready

Copyright © 2017, Texas Instruments Incorporated

18.2.3 Register Interface

The Register Interface block performs all address decoding and control; however, not all registers are available in this block. The context and data input registers are in the DES engine.

18.2.4 DES Enginer

The DES-buffered engine consists of the following major functional blocks:

- Cipher core: the DES algorithm
- Mode control FSM: manages the data flow to and from the DES buffered engine and starts each encrypt or decrypt operation.
- DES feedback mode block: the logic that implements the various feedback modes supported by the DES buffered engine

18.2.4.1 Mode Control FSM

The mode control FSM manages the data flow to and from the DES engine. This block also sends a start pulse to the encrypt/decrypt core and triggers the core to use the new mode keys when a new context is needed. This module also controls the 3DES operation, such that the DES core module is triggered three times (with different keys) before the result data becomes available.

18.2.4.2 DES Feedback Mode Block

The DES feedback mode block buffers the input and output blocks and contains all logic to implement the 3DES and various feedback modes. See the FIPS-81 document for details on the ECB, CBC, and CFB modes of operation.

By itself, the DES cipher core outputs data compliant for ECB encryption. However, most applications use DES with feedback. Feedback provides additional security by randomizing repeated patterns in the plain text, which could otherwise be exploited to attack the cipher text. The DES buffered engine supports ECB, CBC, and CFB modes of operations for the DES and 3DES algorithm.

3DES mode performs the DES algorithm three times on a single block and uses a different key for each invocation of the DES algorithm, greatly increasing security of the cipher text but at the cost of a 3× reduction in throughput. The DES buffered engine implements a 3DES logic wrapper around the 2-round DES core, enabling seamless 3DES encryption.

18.2.4.3 DES Cipher Core

The DES cipher core implements the DES algorithm as specified in the FIPS 46-3. The core operates on the input block and performs the required substitution, shift, and mix operations. The core also applies the correct key-scheduling.

Inherently, considerable parallelism is possible with the DES algorithm. This is exploited in two ways. For high performance, the 64 bits composing the data block are processed concurrently (4-round implementation). For low gate-count, resources are shared on both the main data and key paths (1-round implementation).

A fundamental component of the DES algorithm is the substitution box (S-Box). The S-Box provides a unique 4-bit output for each 6-bit input. The S-Box design is a primary factor for both performance and gate count. The DES cipher core has a standard lookup table S-Box that allows room for the synthesizer to optimize on timing or gate count.

18.3 DES-Supported Modes of Operation

18.3.1 ECB Feedback Mode

Figure 18-2 shows the basic ECB feedback mode of operation, where the input data is passed directly to the basic cryptographic core and the output of the cryptographic core is passed directly to the output buffer. For decryption, the DES core operates in reverse, meaning the decrypt key sequence is used for the data processing, where encryption uses the encrypt key sequence.

Copyright © 2017, Texas Instruments Incorporated

Figure 18-2. DES – ECB Feedback Mode

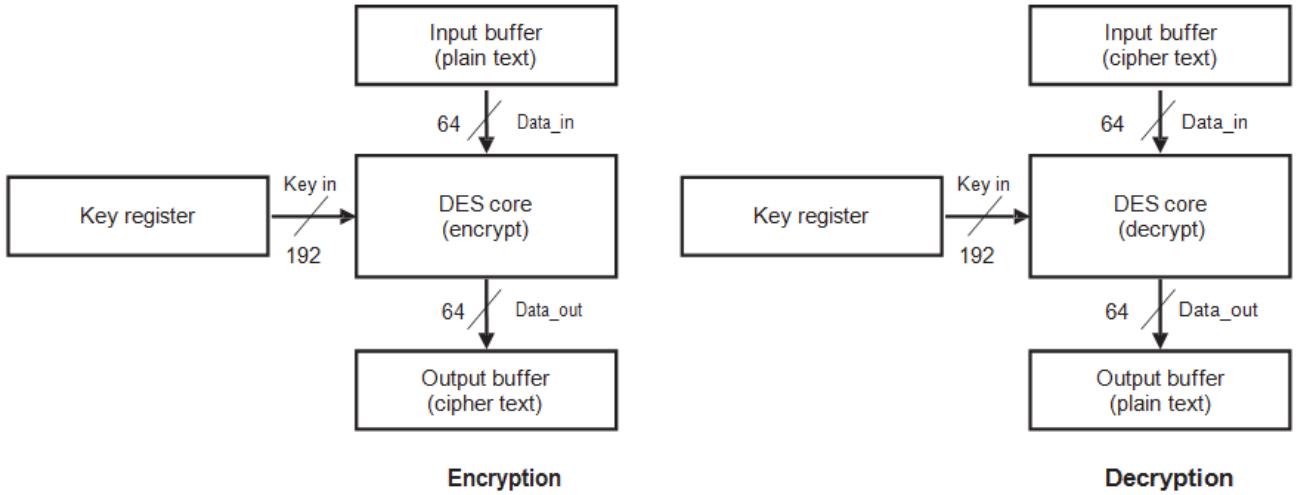

18.3.1.1 CBC Feedback Mode

Figure 18-3 shows the CBC feedback mode of operation, where the input data is XORed with the initialization vector (IV) before it is passed to the basic crypto core. The output of the crypto core is passed directly to the output buffer. For decryption, the operation is reversed, resulting in an XOR at the output of the crypto core.

Figure 18-3. DES3DES – CBC Feedback Mode

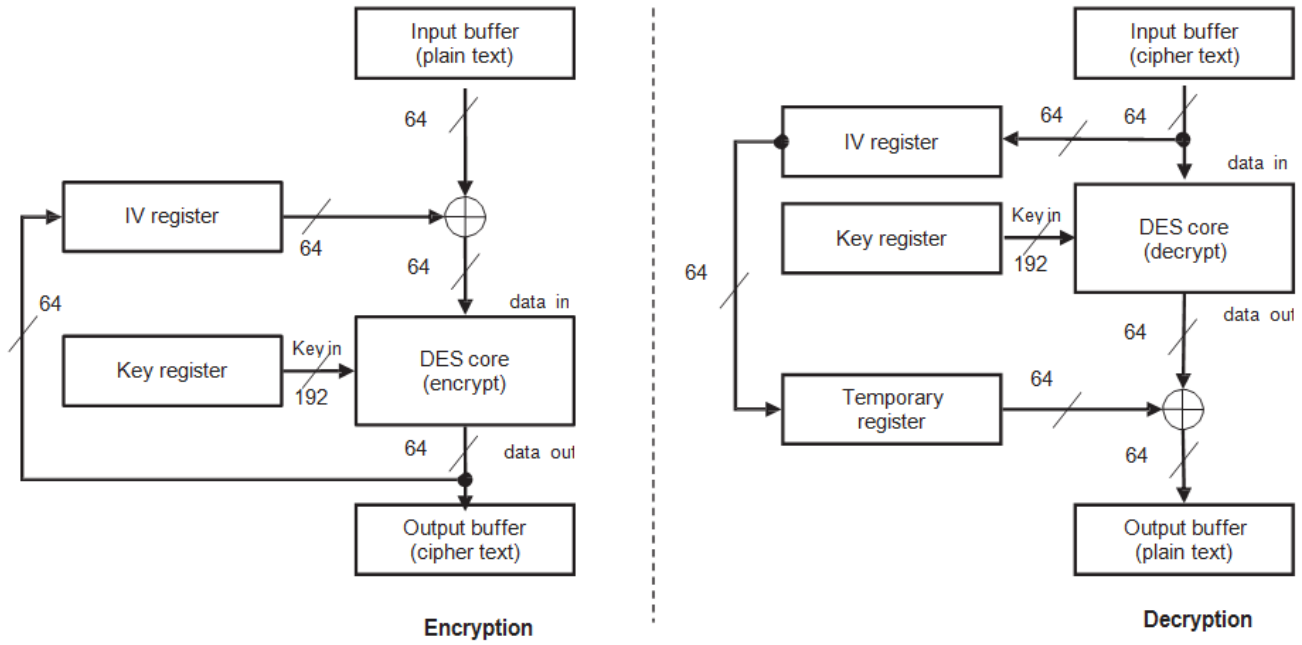

18.3.1.2 CFB Feedback Mode

Figure 18-4 shows the CFB mode of operation for encryption and decryption. The input for the crypto core is the IV; the result is XORed with the data. The result is fed back via the IV register, as the next input for the crypto core. The decrypt operation is reversed, but the crypto core still performs an encryption.

Copyright © 2017, Texas Instruments Incorporated

Figure 18-4. DES3DES – CFB Feedback Mode

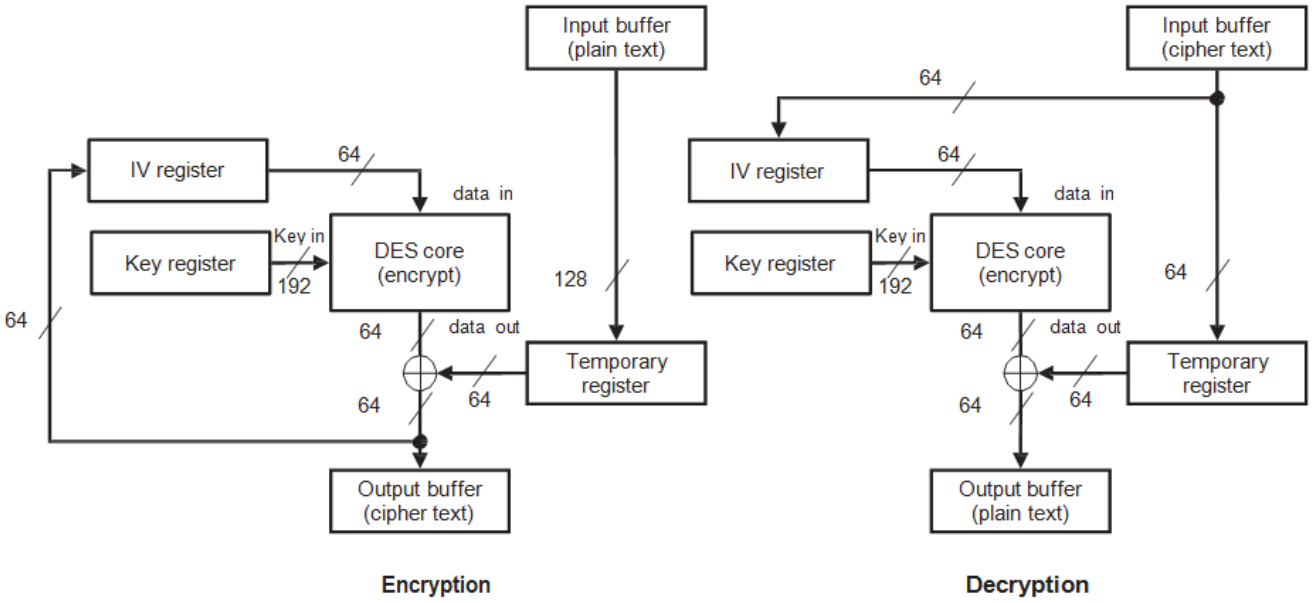

18.4 DES Module Programming Guide – Low-Level Programming Models

18.4.1 Surrounding Modules Global Initialization

18.4.1.1 Main Sequence – DES Global Initialization

The procedure listed in Table 18-2 initializes the DES

Table 18-2. . DES Global Initialization

Step	Register/Bit Field/Programming Model	Value
Enable Clock	CRYPTOCLKEN [0]	0x1
Select the algorithm type (DES or 3DES)	See the programming models	
Select the operating mode (ECB, CBC or CFB)	DES_CTRL[5:4] MODE	-
IF: ECB operating mode not selected	DES_CTRL[5:4] MODE	≠ 0x0
Load the initialization vector LSW	DES_IV_L[31:0] IV_L	-
Load the initialization vector MSW	DES_IV_H[31:0] IV_H	-
Define the cryptographic data length	DES_LENGTH[31:0] LENGTH	-
ENDIF		
Select encryption or decryption	DES_CTRL[2] DIRECTION	-

18.4.1.2 Subsequence – Configure the DES Algorithm Type

The subsequence listed in Table 18-3 details the DES algorithm type settings.

Table 18-3. DES Algorithm Type Configuration

Step	Register/Bit Field/Programming Model	Value
Load key 1 LSW	DES_KEY1_L[31:0] KEY1_L	-
Load key 1 MSW	DES_KEY1_H[31:0] KEY1_H	-
Select DES algorithm	DES_CTRL[3] TDES	0x0

Copyright © 2017, Texas Instruments Incorporated

18.4.1.3 Subsequence – Configure the 3DES Algorithm Type

The subsequence listed in Table 18-4 details the 3DES algorithm type settings.

Table 18-4. 3DES Algorithm Type Configuration

Step	Register/Bit Field/Programming Model	Value
Load key 1 LSW	DES_KEY1_L[31:0] KEY1_L	-
Load key 1 MSW	DES_KEY1_H[31:0] KEY1_H	-
Load key 2 LSW	DES_KEY2_L[31:0] KEY2_L	-
Load key 2 MSW	DES_KEY2_H[31:0] KEY2_H	-
Load key 3 LSW	DES_KEY3_L[31:0] KEY3_L	-
Load key 3 MSW	DES_KEY3_H[31:0] KEY3_H	-
Select 3DES algorithm	DES_CTRL[3] TDES	0x1

18.4.2 Operational Modes Configuration

18.4.2.1 Main Sequence – DES Polling Mode

Figure 18-5 shows DES polling mode. The registers used in DES polling mode are: DES_DATA_L, DES_DATA_H, and DES_CTRL.

Copyright © 2017, Texas Instruments Incorporated

Figure 18-5. DES Polling Mode

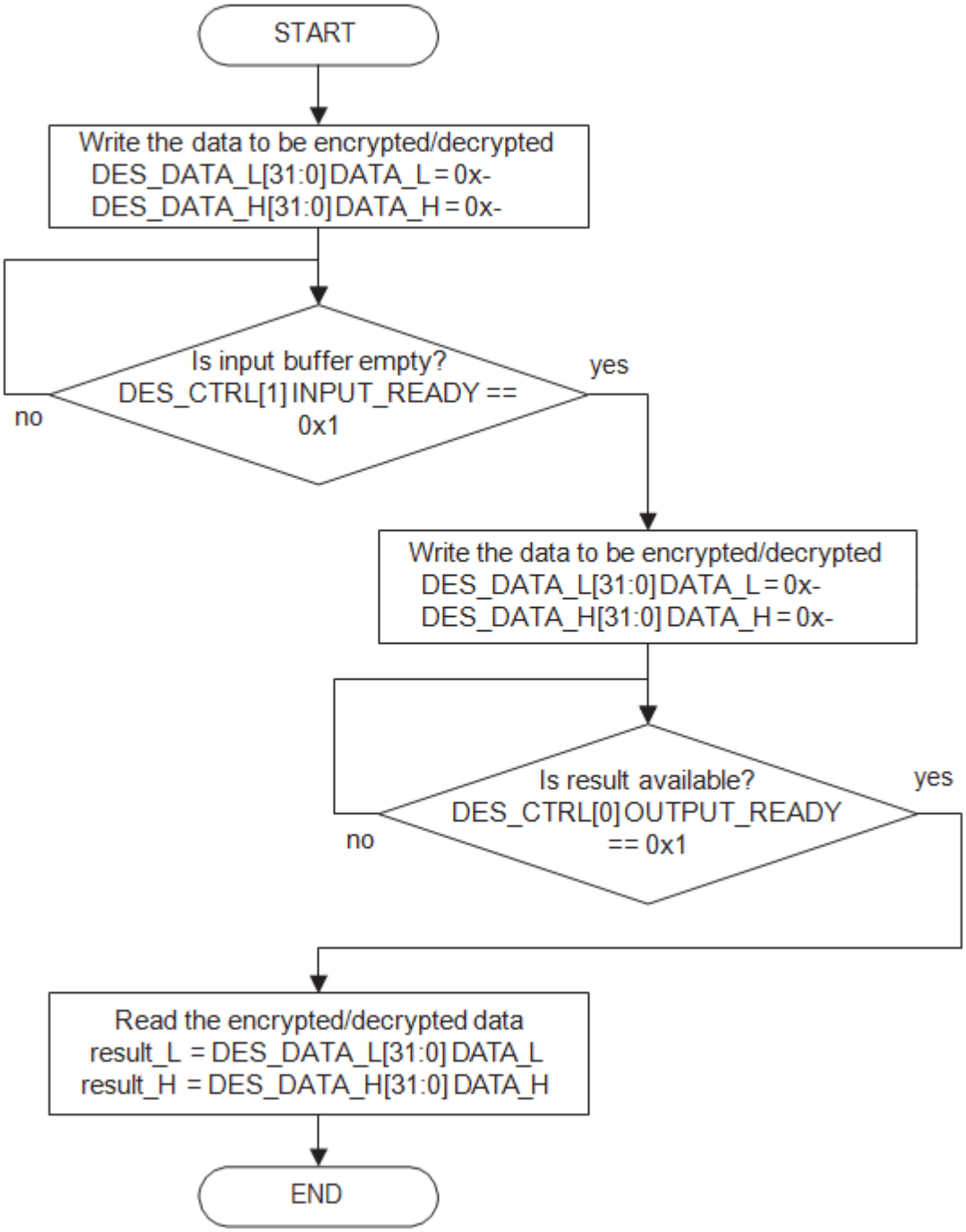

Copyright © 2017, Texas Instruments Incorporated

18.4.2.2 DES Interrupt Mode

Table 18-5 lists the DES interrupt mode steps.

Table 18-5. . DES Interrupt Mode

Step	Register/Bit Field/Programming Model	Value
Enable DES module interrupts	DES_IRQENABLE[2:0]	0x7
Load the input buffer data LSW register	DES_DATA_L[31:0] DATA_L	-
Load the input buffer data HSW register	DES_DATA_H[31:0] DATA_H	-

18.4.2.3 DES Interrupt DMA Mode

Table 18-6 lists the DES DMA mode steps.

Table 18-6. DES DMA Mode

Step	Register/Bit Field/Programming Model	Value
Enable DES module DMA requests	DES_SYSCONFIG[7:5]	0x7
Load the input buffer data LSW register	DES_DATA_L[31:0] DATA_L	-
Load the input buffer data HSW register	DES_DATA_H[31:0] DATA_H	-

18.4.3 DES Events Servicing

18.4.3.1 Interrupt Servicing

This section describes the event servicing of the module. Figure 18-6 shows the DES interrupt service. The registers used during event servicing are: DES_IRQSTATUS, DES_DATA_L, and DES_DATA_H.

Figure 18-6. DES Interrupt Service

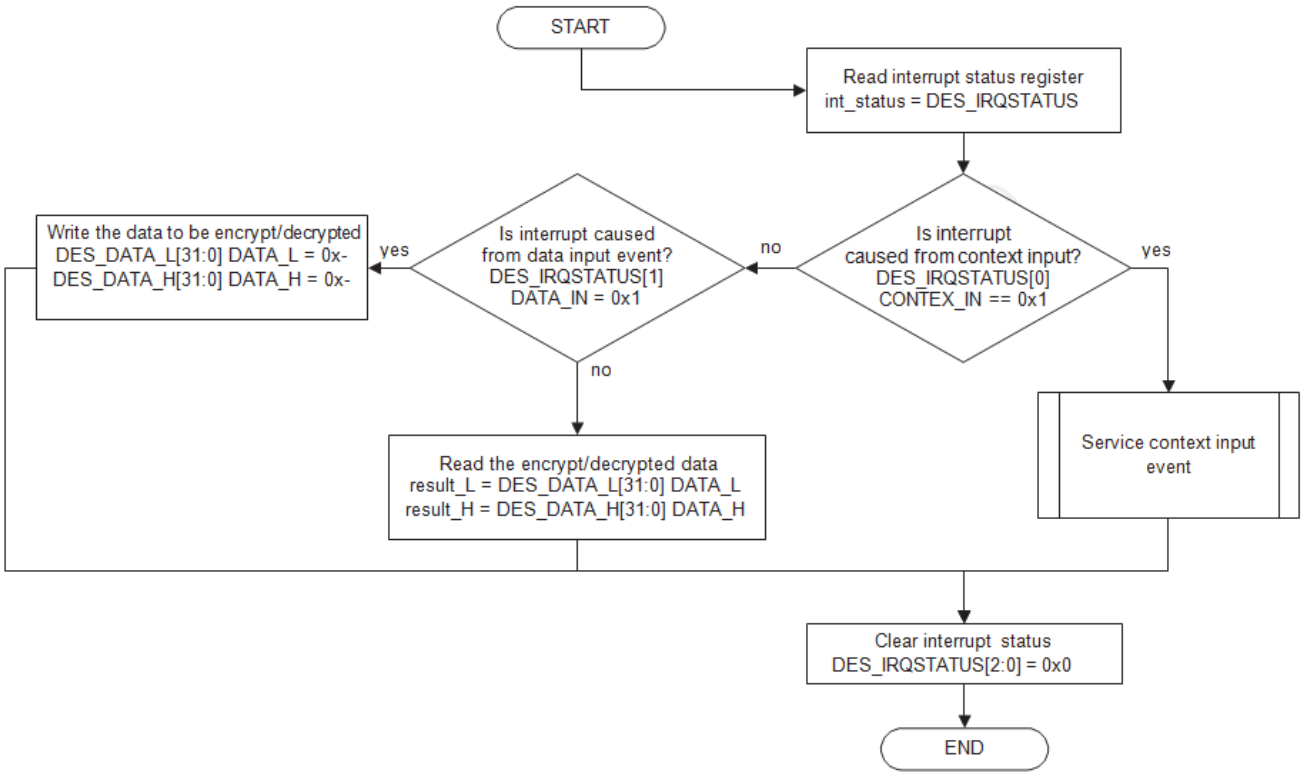

Copyright © 2017, Texas Instruments Incorporated

18.4.3.2 Context Input Event Servicing

This section describes the context input event servicing of the module, as shown in Figure 18-7. The registers used during event servicing are: DES_CTRL, DES_SYSCONFIG, DES_KEY1_L, DES_KEY1_H, DES_KEY2_L, DES_KEY2_H, DES_KEY3_L, DES_KEY3_H, DES_IV_L, DES_IV_H, and DES_LENGTH.

Figure 18-7. DES Context Input Event Service

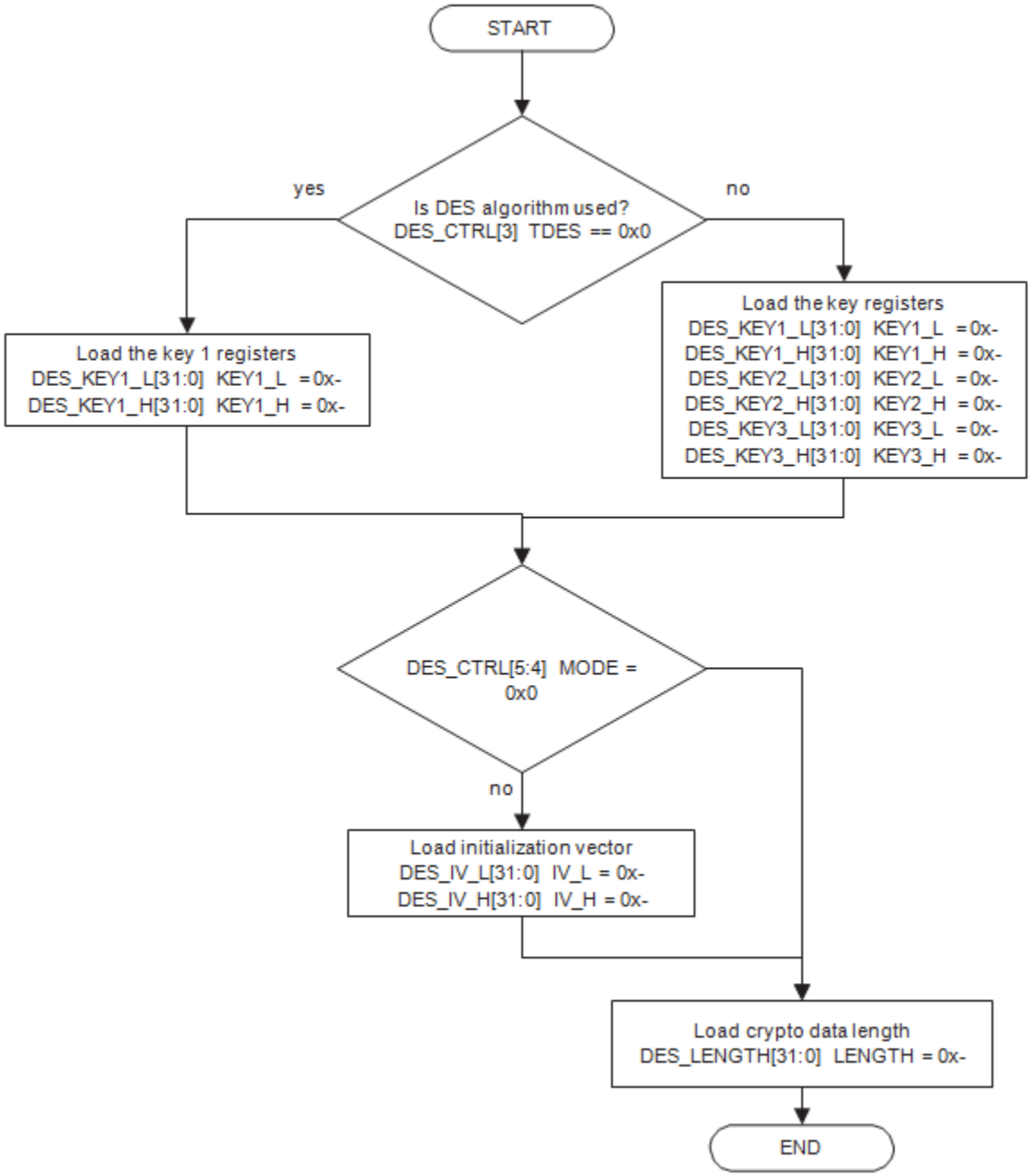

Copyright © 2017, Texas Instruments Incorporated

18.5 DES Registers

Table 18-7 lists the memory-mapped DES registers. All register offset addresses not listed in Table 18-7 should be considered as reserved locations and the register contents should not be modified.

The DES module comprises registers that exist at an offset relative to the DES module base address 0x4403 8000, and a small set of DES μDMA registers that exist at an offset relative to DTHE module base address 0x4403.0000.

NOTE: The DES registers are limited to 32-bit data accesses; 8- and 16-bit accesses are not allowed, and can corrupt register contents.

Table 18-7. DES Register Map

Offset	Acronym	Register Name	Section
830h	DTHE_DES_IM	DES Interrupt Mask Set Register	Section 18.5.1
834h	DTHE_DES_RIS	DES Interrupt Raw Interrupt Status Register	Section 18.5.2
838h	DTHE_DES_MIS	DES Interrupt Masked Interrupt Status Register	Section 18.5.3
83Ch	DTHE_DES_IC	DES Interrupt Clear Interrupt Status Register	Section 18.5.4
1000h	DES_KEY3_L	DES Key 3 LSW for 192-Bit Key	Section 18.5.5
1004h	DES_KEY3_H	DES Key 3 MSW for 192-Bit Key	Section 18.5.6
1008h	DES_KEY2_L	DES Key 2 LSW for 128-Bit Key	Section 18.5.7
100Ch	DES_KEY2_H	DES Key 2 MSW for 128-Bit Key	Section 18.5.8
1010h	DES_KEY1_L	DES Key 1 LSW for 64-Bit Key	Section 18.5.9
1014h	DES_KEY1_H	DES Key 1 MSW for 64-Bit Key	Section 18.5.10
1018h	DES_IV_L	DES Initialization Vector	Section 18.5.11
101Ch	DES_IV_H	DES Initialization Vector	Section 18.5.12
1020h	DES_CTRL	DES Control	Section 18.5.13
1024h	DES_LENGTH	DES Cryptographic Data Length	Section 18.5.14
1028h	DES_DATA_L	DES LSW Data RW	Section 18.5.15
102Ch	DES_DATA_H	DES MSW Data RW	Section 18.5.16
1034h	DES_SYSCONFIG	DES System Configuration	Section 18.5.17
103Ch	DES_IRQSTATUS	DES Interrupt Status	Section 18.5.18
1040h	DES_IRQENABLE	DES Interrupt Enable	Section 18.5.19

Copyright © 2017, Texas Instruments Incorporated

18.5.1 DTHE_DES_IM Register (Offset = 830h) [reset = Dh]

DTHE_DES_IM is shown in Figure 18-8 and described in Table 18-8.

Return to Summary Table.

The interrupt mask set register lets the user control which interrupt source should interrupt the processor.

Figure 18-8. DTHE_DES_IM Register

31	30	29	28	27	26	25	24
RESERVED							
R-0h							
23	22	21	20	19	18	17	16
RESERVED							
R-0h							
15	14	13	12	11	10	9	8
RESERVED							
R-0h							
7	6	5	4	3	2	1	0
RESERVED				Dout	Din	RESERVED	Cin
R-0h				R/W-1h	R/W-1h	R-0h	R/W-1h

LEGEND: R/W = Read/Write; R = Read only; W1toCl = Write 1 to clear bit; *-n* = value after reset

Table 18-8. DTHE_DES_IM Register Field Descriptions

Bit	Field	Type	Reset	Description
31-4	RESERVED	R	0h	
3	Dout	R/W	1h	Data out: this interrupt is raised when the DMA finishes writing the last word of the process result.
2	Din	R/W	1h	Data in: this interrupt is raised when the DMA writes the last word of input data to the internal FIFO of the engine.
1	RESERVED	R	0h	
0	Cin	R/W	1h	Context in: this interrupt is raised when the DMA completes context write to the internal register.

Copyright © 2017, Texas Instruments Incorporated

18.5.2 DTHE_DES_RIS Register (Offset = 834h) [reset = 0h]

DTHE_DES_RIS is shown in Figure 18-9 and described in Table 18-9.

Return to Summary Table.

Raw Interrupt Status register

Figure 18-9. DTHE_DES_RIS Register

31	30	29	28	27	26	25	24
RESERVED							
R-0h							
23	22	21	20	19	18	17	16
RESERVED							
R-0h							
15	14	13	12	11	10	9	8
RESERVED							
R-0h							
7	6	5	4	3	2	1	0
RESERVED				Dout	Din	RESERVED	Cin
R-0h				R-0h	R-0h	R-0h	R-0h

LEGEND: R/W = Read/Write; R = Read only; W1toCl = Write 1 to clear bit; *-n* = value after reset

Table 18-9. DTHE_DES_RIS Register Field Descriptions

Bit	Field	Type	Reset	Description
31-4	RESERVED	R	0h	
3	Dout	R	0h	Output Data movement is done.
2	Din	R	0h	Input Data movement is done.
1	RESERVED	R	0h	
0	Cin	R	0h	Context input is done.

Copyright © 2017, Texas Instruments Incorporated

18.5.3 DTHE_DES_MIS Register (Offset = 838h) [reset = 0h]

DTHE_DES_MIS is shown in Figure 18-10 and described in Table 18-10.

Return to Summary Table.

Masked Interrupt Status register

Figure 18-10. DTHE_DES_MIS Register

31	30	29	28	27	26	25	24
RESERVED							
R-0h							
23	22	21	20	19	18	17	16
RESERVED							
R-0h							
15	14	13	12	11	10	9	8
RESERVED							
R-0h							
7	6	5	4	3	2	1	0
RESERVED				Dout	Din	RESERVED	Cin
R-0h				R-0h	R-0h	R-0h	R-0h

LEGEND: R/W = Read/Write; R = Read only; W1toCl = Write 1 to clear bit; *-n* = value after reset

Table 18-10. DTHE_DES_MIS Register Field Descriptions

Bit	Field	Type	Reset	Description
31-4	RESERVED	R	0h	
3	Dout	R	0h	Output Data movement is done.
2	Din	R	0h	Input Data movement is done.
1	RESERVED	R	0h	
0	Cin	R	0h	Context input is done.

Copyright © 2017, Texas Instruments Incorporated

18.5.4 DTHE_DES_IC Register (Offset = 83Ch) [reset = 0h]

DTHE_DES_IC is shown in Figure 18-11 and described in Table 18-11.

Return to Summary Table.

Interrupt Acknowledge register. Writing 1 to these bits clears the status flag in the IRIS and IMIS registers. Always reads zero.

Figure 18-11. DTHE_DES_IC Register

31	30	29	28	27	26	25	24
RESERVED							
R-0h							
23	22	21	20	19	18	17	16
RESERVED							
R-0h							
15	14	13	12	11	10	9	8
RESERVED							
R-0h							
7	6	5	4	3	2	1	0
RESERVED				Dout	Din	RESERVED	Cin
R-0h				R-0h	R-0h	R-0h	R-0h

LEGEND: R/W = Read/Write; R = Read only; W1toCl = Write 1 to clear bit; *-n* = value after reset

Table 18-11. DTHE_DES_IC Register Field Descriptions

Bit	Field	Type	Reset	Description
31-4	RESERVED	R	0h	
3	Dout	R	0h	Clear “output data movement done” flag.
2	Din	R	0h	Clear “input data movement done” flag.
1	RESERVED	R	0h	
0	Cin	R	0h	Clear “context input done” flag.

Copyright © 2017, Texas Instruments Incorporated

18.5.5 DES_KEY3_L Register (Offset = 1000h) [reset = 0h]

DES_KEY3_L is shown in Figure 18-12 and described in Table 18-12.

Return to Summary Table.

KEY3 (LSW) for 192-bit key.

Figure 18-12. DES_KEY3_L Register

31	30	29	28	27	26	25	24	23	22	21	20	19	18	17	16	15	14	13	12	11	10	9	8	7	6	5	4	3	2	1	0
KEY3_L																															
R/W-0h																															

LEGEND: R/W = Read/Write; R = Read only; W1toCl = Write 1 to clear bit; *-n* = value after reset

Table 18-12. DES_KEY3_L Register Field Descriptions

Bit	Field	Type	Reset	Description
31-0	KEY3_L	R/W	0h	Data for key3

Copyright © 2017, Texas Instruments Incorporated

18.5.6 DES_KEY3_H Register (Offset = 1004h) [reset = 0h]

DES_KEY3_H is shown in Figure 18-13 and described in Table 18-13.

Return to Summary Table.

KEY3 (MSW) for 192-bit key.

Figure 18-13. DES_KEY3_H Register

31	30	29	28	27	26	25	24	23	22	21	20	19	18	17	16	15	14	13	12	11	10	9	8	7	6	5	4	3	2	1	0
KEY3_H																															
R/W-0h																															

LEGEND: R/W = Read/Write; R = Read only; W1toCl = Write 1 to clear bit; *-n* = value after reset

Table 18-13. DES_KEY3_H Register Field Descriptions

Bit	Field	Type	Reset	Description
31-0	KEY3_H	R/W	0h	Data for key3

Copyright © 2017, Texas Instruments Incorporated

18.5.7 DES_KEY2_L Register (Offset = 1008h) [reset = 0h]

DES_KEY2_L is shown in Figure 18-14 and described in Table 18-14.

Return to Summary Table.

KEY2 (LSW) for 192-bit key.

Figure 18-14. DES_KEY2_L Register

31	30	29	28	27	26	25	24	23	22	21	20	19	18	17	16	15	14	13	12	11	10	9	8	7	6	5	4	3	2	1	0
KEY2_L																															
R/W-0h																															

LEGEND: R/W = Read/Write; R = Read only; W1toCl = Write 1 to clear bit; *-n* = value after reset

Table 18-14. DES_KEY2_L Register Field Descriptions

Bit	Field	Type	Reset	Description
31-0	KEY2_L	R/W	0h	Data for key2

Copyright © 2017, Texas Instruments Incorporated

18.5.8 DES_KEY2_H Register (Offset = 100Ch) [reset = 0h]

DES_KEY2_H is shown in Figure 18-15 and described in Table 18-15.

Return to Summary Table.

KEY2 (MSW) for 192-bit key.

Figure 18-15. DES_KEY2_H Register

31	30	29	28	27	26	25	24	23	22	21	20	19	18	17	16	15	14	13	12	11	10	9	8	7	6	5	4	3	2	1	0
KEY2_H																															
R/W-0h																															

LEGEND: R/W = Read/Write; R = Read only; W1toCl = Write 1 to clear bit; *-n* = value after reset

Table 18-15. DES_KEY2_H Register Field Descriptions

Bit	Field	Type	Reset	Description
31-0	KEY2_H	R/W	0h	Data for key2

Copyright © 2017, Texas Instruments Incorporated

18.5.9 DES_KEY1_L Register (Offset = 1010h) [reset = 0h]

DES_KEY1_L is shown in Figure 18-16 and described in Table 18-16.

Return to Summary Table.

KEY1 (LSW) for 192-bit key.

Figure 18-16. DES_KEY1_L Register

31	30	29	28	27	26	25	24	23	22	21	20	19	18	17	16	15	14	13	12	11	10	9	8	7	6	5	4	3	2	1	0
KEY1_L																															
R/W-0h																															

LEGEND: R/W = Read/Write; R = Read only; W1toCl = Write 1 to clear bit; *-n* = value after reset

Table 18-16. DES_KEY1_L Register Field Descriptions

Bit	Field	Type	Reset	Description
31-0	KEY1_L	R/W	0h	Data for key1

Copyright © 2017, Texas Instruments Incorporated

18.5.10 DES_KEY1_H Register (Offset = 1014h) [reset = 0h]

DES_KEY1_H is shown in Figure 18-17 and described in Table 18-17.

Return to Summary Table.

KEY1 (MSW) for 192-bit key.

Figure 18-17. DES_KEY1_H Register

31	30	29	28	27	26	25	24	23	22	21	20	19	18	17	16	15	14	13	12	11	10	9	8	7	6	5	4	3	2	1	0
KEY1_H																															
R/W-0h																															

LEGEND: R/W = Read/Write; R = Read only; W1toCl = Write 1 to clear bit; *-n* = value after reset

Table 18-17. DES_KEY1_H Register Field Descriptions

Bit	Field	Type	Reset	Description
31-0	KEY1_H	R/W	0h	Data for key1

Copyright © 2017, Texas Instruments Incorporated

18.5.11 DES_IV_L Register (Offset = 1018h) [reset = 0h]

DES_IV_L is shown in Figure 18-18 and described in Table 18-18.

Return to Summary Table.

Initialization vector LSW

Figure 18-18. DES_IV_L Register

31	30	29	28	27	26	25	24	23	22	21	20	19	18	17	16	15	14	13	12	11	10	9	8	7	6	5	4	3	2	1	0
IV_L																															
R/W-0h																															

LEGEND: R/W = Read/Write; R = Read only; W1toCl = Write 1 to clear bit; *-n* = value after reset

Table 18-18. DES_IV_L Register Field Descriptions

Bit	Field	Type	Reset	Description
31-0	IV_L	R/W	0h	Initialization vector for CBC, CFB modes.

Copyright © 2017, Texas Instruments Incorporated

18.5.12 DES_IV_H Register (Offset = 101Ch) [reset = 0h]

DES_IV_H is shown in Figure 18-19 and described in Table 18-19.

Return to Summary Table.

Initialization vector MSW

Figure 18-19. DES_IV_H Register

31	30	29	28	27	26	25	24	23	22	21	20	19	18	17	16	15	14	13	12	11	10	9	8	7	6	5	4	3	2	1	0
IV_H																															
R/W-0h																															

LEGEND: R/W = Read/Write; R = Read only; W1toCl = Write 1 to clear bit; *-n* = value after reset

Table 18-19. DES_IV_H Register Field Descriptions

Bit	Field	Type	Reset	Description
31-0	IV_H	R/W	0h	Initialization vector for CBC, CFB modes.

Copyright © 2017, Texas Instruments Incorporated

18.5.13 DES_CTRL Register (Offset = 1020h) [reset = 80000000h]

DES_CTRL is shown in Figure 18-20 and described in Table 18-20.

Return to Summary Table.

Figure 18-20. DES_CTRL Register

31	30	29	28	27	26	25	24
CONTEXT	RESERVED						
RO-1h	RO-0h						
23	22	21	20	19	18	17	16
RESERVED							
RO-0h							
15	14	13	12	11	10	9	8
RESERVED							
RO-0h							
7	6	5	4	3	2	1	0
RESERVED		MODE		TDES	DIRECTION	INPUT_READY	OUTPUT_READY
RO-0h		R/W-0h		R/W-0h	R/W-0h	RO-0h	RO-0h

LEGEND: R/W = Read/Write; R = Read only; W1toCl = Write 1 to clear bit; *-n* = value after reset

Table 18-20. DES_CTRL Register Field Descriptions

Bit	Field	Type	Reset	Description
31	CONTEXT	RO	1h	If 1, this read-only status bit indicates that the context data registers can be overwritten and the host is permitted to write the next context.
30-6	RESERVED	RO	0h	
5-4	MODE	R/W	0h	Select CBC, ECB or CFB mode. 0h = ECB mode 1h = CBC mode 2h = CFB mode 3h = Reserved
3	TDES	R/W	0h	Select DES or triple DES encryption or decryption. 0h = DES mode 1h = TDES mode
2	DIRECTION	R/W	0h	Select encryption or decryption. 0h = Decryption is selected 1h = Encryption is selected
1	INPUT_READY	RO	0h	When 1, ready to encrypt or decrypt data.
0	OUTPUT_READY	RO	0h	When 1, data decrypted or encrypted ready.

Copyright © 2017, Texas Instruments Incorporated

18.5.14 DES_LENGTH Register (Offset = 1024h) [reset = 0h]

DES_LENGTH is shown in Figure 18-21 and described in Table 18-21.

Return to Summary Table.

Figure 18-21. DES_LENGTH Register

31	30	29	28	27	26	25	24	23	22	21	20	19	18	17	16	15	14	13	12	11	10	9	8	7	6	5	4	3	2	1	0
LENGTH																															
R/W-0h																															

LEGEND: R/W = Read/Write; R = Read only; W1toCl = Write 1 to clear bit; *-n* = value after reset

Table 18-21. DES_LENGTH Register Field Descriptions

Bit	Field	Type	Reset	Description
31-0	LENGTH	R/W	0h	Indicates the cryptographic data length in bytes for all modes. Once processing is started with this context, this length decrements to zero. Data lengths up to (2^{32} – 1) bytes are allowed. A write to this register triggers the engine to start using this context. For a host read operation, these registers return all zeroes.

Copyright © 2017, Texas Instruments Incorporated

18.5.15 DES_DATA_L Register (Offset = 1028h) [reset = 0h]

DES_DATA_L is shown in Figure 18-22 and described in Table 18-22.

Return to Summary Table.

Data register (LSW) to read/write encrypted or decrypted data.

Figure 18-22. DES_DATA_L Register

31	30	29	28	27	26	25	24	23	22	21	20	19	18	17	16	15	14	13	12	11	10	9	8	7	6	5	4	3	2	1	0
DATA_L																															
R/W-0h																															

LEGEND: R/W = Read/Write; R = Read only; W1toCl = Write 1 to clear bit; *-n* = value after reset

Table 18-22. DES_DATA_L Register Field Descriptions

Bit	Field	Type	Reset	Description
31-0	DATA_L	R/W	0h	Data for encryption or decryption

Copyright © 2017, Texas Instruments Incorporated

18.5.16 DES_DATA_H Register (Offset = 102Ch) [reset = 0h]

DES_DATA_H is shown in Figure 18-23 and described in Table 18-23.

Return to Summary Table.

Data register (MSW) to read/write encrypted or decrypted data.

Figure 18-23. DES_DATA_H Register

31	30	29	28	27	26	25	24	23	22	21	20	19	18	17	16	15	14	13	12	11	10	9	8	7	6	5	4	3	2	1	0
DATA_H																															
R/W-0h																															

LEGEND: R/W = Read/Write; R = Read only; W1toCl = Write 1 to clear bit; *-n* = value after reset

Table 18-23. DES_DATA_H Register Field Descriptions

Bit	Field	Type	Reset	Description
31-0	DATA_H	R/W	0h	Data for encryption or decryption

Copyright © 2017, Texas Instruments Incorporated

18.5.17 DES_SYSCONFIG Register (Offset = 1034h) [reset = 0h]

DES_SYSCONFIG is shown in Figure 18-24 and described in Table 18-24.

Return to Summary Table.

Figure 18-24. DES_SYSCONFIG Register

31	30	29	28	27	26	25	24
RESERVED							
RO-0h							
23	22	21	20	19	18	17	16
RESERVED							
RO-0h							
15	14	13	12	11	10	9	8
RESERVED							
RO-0h							
7	6	5	4	3	2	1	0
DMA_REQ_CONTEXT_IN_EN	DMA_REQ_DATA_OUT_EN	DMA_REQ_DATA_IN_EN	RESERVED				
R/W-0h	R/W-0h	R/W-0h	RO-0h				

LEGEND: R/W = Read/Write; R = Read only; W1toCl = Write 1 to clear bit; *-n* = value after reset

Table 18-24. DES_SYSCONFIG Register Field Descriptions

Bit	Field	Type	Reset	Description
31-8	RESERVED	RO	0h	
7	DMA_REQ_CONTEXT_IN_EN	R/W	0h	If set to 1, the DMA context request is enabled. 0h = DMA disabled 1h = DMA enabled
6	DMA_REQ_DATA_OUT_EN	R/W	0h	If set to 1, the DMA output request is enabled. 0h = DMA disabled 1h = DMA enabled
5	DMA_REQ_DATA_IN_EN	R/W	0h	If set to 1, the DMA input request is enabled. 0h = DMA disabled 1h = DMA enabled
4-0	RESERVED	RO	0h	

Copyright © 2017, Texas Instruments Incorporated

18.5.18 DES_IRQSTATUS Register (Offset = 103Ch) [reset = 0h]

DES_IRQSTATUS is shown in Figure 18-25 and described in Table 18-25.

Return to Summary Table.

This register indicates the interrupt status. If one of the interrupt bits is set, the interrupt output is asserted.

Figure 18-25. DES_IRQSTATUS Register

31	30	29	28	27	26	25	24
RESERVED							
RO-0h							
23	22	21	20	19	18	17	16
RESERVED							
RO-0h							
15	14	13	12	11	10	9	8
RESERVED							
RO-0h							
7	6	5	4	3	2	1	0
RESERVED					DATA_OUT	DATA_IN	CONTEX_IN
RO-0h					R/W-0h	R/W-0h	R/W-0h

LEGEND: R/W = Read/Write; R = Read only; W1toCl = Write 1 to clear bit; *-n* = value after reset

Table 18-25. DES_IRQSTATUS Register Field Descriptions

Bit	Field	Type	Reset	Description
31-3	RESERVED	RO	0h	
2	DATA_OUT	R/W	0h	This bit indicates data output interrupt is active and triggers the interrupt output.
1	DATA_IN	R/W	0h	This bit indicates data input interrupt is active and triggers the interrupt output.
0	CONTEX_IN	R/W	0h	This bit indicates context interrupt is active and triggers the interrupt output.

Copyright © 2017, Texas Instruments Incorporated

18.5.19 DES_IRQENABLE Register (Offset = 1040h) [reset = 0h]

DES_IRQENABLE is shown in Figure 18-26 and described in Table 18-26.

Return to Summary Table.

This register contains an enable bit for each unique interrupt generated by the module. It matches the layout of DES_IRQSTATUS register. An interrupt is enabled when the bit in this register is set to 1.

Figure 18-26. DES_IRQENABLE Register

31	30	29	28	27	26	25	24
RESERVED							
RO-0h							
23	22	21	20	19	18	17	16
RESERVED							
RO-0h							
15	14	13	12	11	10	9	8
RESERVED							
RO-0h							
7	6	5	4	3	2	1	0
RESERVED					M_DATA_OUT	M_DATA_IN	M_CONTEX_IN
RO-0h					R/W-0h	R/W-0h	R/W-0h

LEGEND: R/W = Read/Write; R = Read only; W1toCl = Write 1 to clear bit; *-n* = value after reset

Table 18-26. DES_IRQENABLE Register Field Descriptions

Bit	Field	Type	Reset	Description
31-3	RESERVED	RO	0h	
2	M_DATA_OUT	R/W	0h	If this bit is set to 1, the data output interrupt is enabled.
1	M_DATA_IN	R/W	0h	If this bit is set to 1, the data input interrupt is enabled.
0	M_CONTEX_IN	R/W	0h	If this bit is set to 1, the context interrupt is enabled.

Copyright © 2017, Texas Instruments Incorporated

SHA/MD5 Accelerator

The SHA/MD5 module provides hardware-accelerated hash functions, and can run:

- MD5 message digest algorithm developed by Ron Rivest in 1991
- SHA-1 algorithm compliant with the FIPS 180-3 standard
- SHA-2 (SHA-224 and SHA-256) algorithm compliant with the FIPS 180-3 standard
- Hash message authentication code (HMAC) operation

The algorithms produce a condensed representation of a message or a data file, called digest or signature, which can then be used to verify the message integrity.

- Hashing of 0 to 2^{33} – 2 bytes of data (of which 2^{32} –1 bytes are in one pass) using the MD5, SHA-1, SHA-224, or SHA-256 hash algorithm (byte granularity only, no support for bit granularity)
- Automatic HMAC key preprocessing for HMAC keys up to 64 bytes
- Host-assisted HMAC key preprocessing for HMAC keys larger than 64 bytes
- HMAC from precomputes (inner or outer digest) for improved performance on small blocks
- Supports μDMA operation for data and context in and result out transfers
- Supports interrupt to read the digest (signature)

Topic **Page**

19.1 SHA/MD5 Functional Description **676**
19.2 SHA-MD5 Registers **687**

Copyright © 2017, Texas Instruments Incorporated

19.1 SHA/MD5 Functional Description

19.1.1 SHA/MD5 Block Diagram

Figure 19-1 shows the module architecture, which consists of four primary blocks: the hash/HMAC engine, the configuration registers, and the interface to the µDMA and the interrupt handler.

Figure 19-1. SHA/MD5 Module Block Diagram

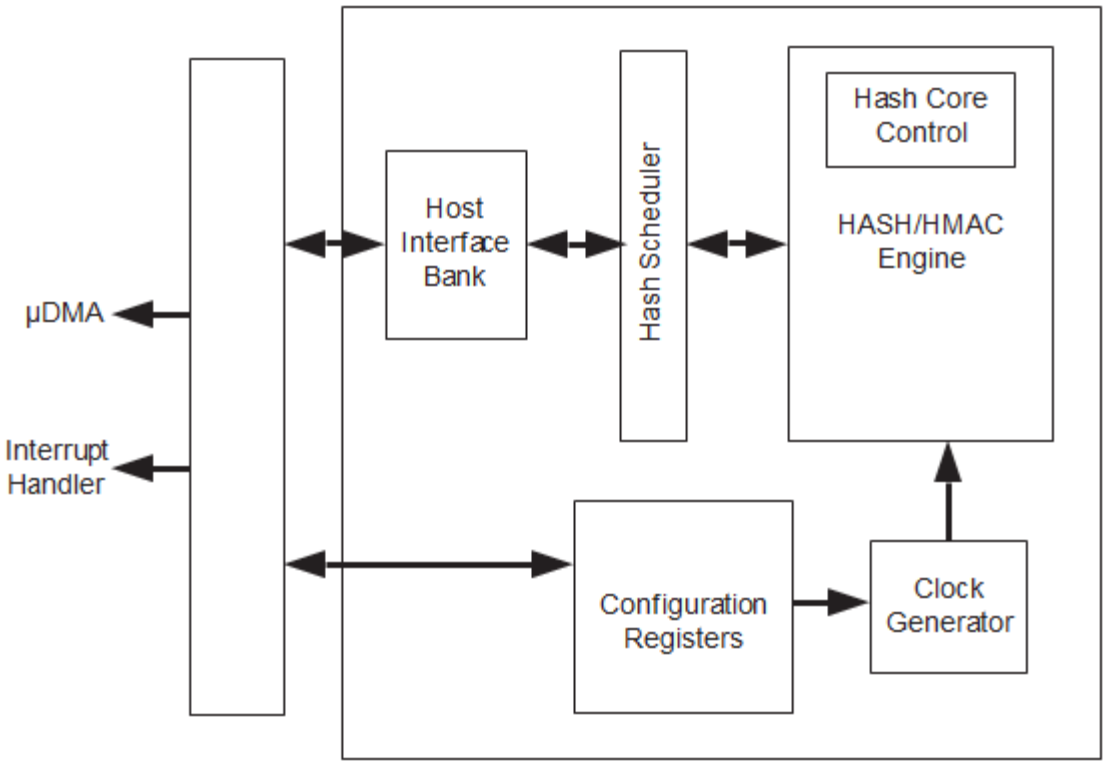

19.1.1.1 Configuration Registers

The configuration registers contain the following global control and status registers for the SHA/MD5 module:

- A system control register that controls the mode of operation (SHAMD5_SYSCONFIG register)
- µDMA interrupt control registers (DTHE_SHA_IM, DTHE_SHA_RIS, DTHE_SHA_MIS, and DTHE_SHA_IC registers, which reside in the Encryption Control Base address space)
- An interrupt status register (SHAMD5_IRQSTATUS register)
- An enable register (SHAMD5_IRQENABLE register)

19.1.1.2 Hash/HMAC Engine

The Hash/HMAC engine performs the SHA-1, SHA-2, or MD5 hash computation. When loaded with a data block, and optionally an intermediate digest, it independently performs the hash computation (64 or 80 rounds, depending on the algorithm) on that data block.

The engine can also start from the specified initial digest values instead of a loaded intermediate. Furthermore, it can perform the IPAD and OPAD XORs for MAC operations. The hash core does not perform any hash padding; this is performed in the host interface block, where the data input registers are located. A loaded data block must always be a full 64 bytes (512 bits) long.

Copyright © 2017, Texas Instruments Incorporated

19.1.1.3 Hash Core Control

When the hash core is idle or done, a new hash operation can be started. Any additional information needed by the hash core (mode of operation, data to process, input digest, if not starting from algorithm constants or continuing) must be provided by programming the SHA registers before the core can accept the operation.

19.1.1.4 Host Interface Bank

The host interface bank can access the hash core for hashing individual 64-byte hash blocks. The host interface bank contains registers such as the data FIFO (SHA Data n Input (SHAMD5_DATA_n_IN) registers), the SHA Inner Digest x (SHAMD5_IDIGEST_X) registers, and several control and status registers.

The host interface block contains all relevant control logic for performing hash and HMAC computations on large (that is, larger than one hash block) blocks of data, including hash padding, final hash, and outer hash. The block provides the necessary flow control to the SHA μDMA and interrupt interface.

19.1.2 μDMA and Interrupt Requests

The SHA/MD5 module can operate in μDMA mode, where the module can assert a μDMA request for context in, context out, or data input. The μDMA signals that can be generated are:

- Context In μDMA request: Request for key, digest, mode, and LENGTH information
- Context Out μDMA request: Request for read from HMAC
- Data In μDMA request: Request input data in multiples of 16 bytes

The SHA/MD5 module be programmed to assert an interrupt when the μDMA has completed its last transfer, by programming the SHA DMA Interrupt Mask (DTHE_SHA_IM) register. The SHA DMA Raw Interrupt Status (DTHE_SHA_RIS) register, at CCM offset 0x014, indicates when the μDMA has completed, and can be cleared by the SHA DMA Interrupt Clear (DTHE_SHA_IC) register.

If context and data transfers are to be handled through software in interrupt mode, then the SHA Interrupt Enable (SHAMD5_IRQENABLE) register can be used to enable interrupt triggering when context out, context in, data in, or data out is ready. The SHA Interrupt Status (SHAMD5_IRQSTATUS) register indicates when an interrupt is triggered.

NOTE: If the application uses interrupt mode, an interrupt is generated for each block of processed data. To support larger data flow, μDMA mode should be used and the bits in the SHAMD5_IRQENABLE register should be cleared.

Table 19-1. Interrupts and Events

Event	Description
SHAMD5_IRQSTATUS[3]: CONTEXT_OUT	Context output interrupt
SHAMD5_IRQSTATUS[1]: DATA_IN	Data input interrupt
SHAMD5_IRQSTATUS[0]: CONTEXT_IN	Context input interrupt

19.1.3 Operation Description

The SHA/MD5 module can run the SHA-1, SHA-224, SHA-256, and MD5 algorithms, depending on the value of the ALGO bit field in the SHA Mode (SHAMD5_MODE) register.

Copyright © 2017, Texas Instruments Incorporated

Table 19-2. SHA/MD5 Module Algorithm Selection

ALGO Field of SHAMD5_MODE Register	Description
0x0	MD5 algorithm selected
0x1	SHA-1 algorithm selected
0x2	SHA-224 algorithm selected
0x3	SHA-256 algorithm selected

19.1.3.1 SHA Mode

19.1.3.1.1 Starting a New Hash

To start a new hash, follow these steps:

1. Set the ALGO bit-field in the SHAMD5_MODE register to 0x1, 0x2, or 0x3 to select SHA-1, SHA-224, or SHA-256, respectively.
2. Set the ALGO_CONSTANT bit in the SHAMD5_MODE register to 1 to initialize all SHA Inner/Outer Digest n registers from SHAMD5_ODIGEST_A/SHAMD5_IDIGEST_A to SHAMD5_ODIGEST_H/SHAMD5_IDIGEST_H with their default values specified by the algorithm, and set the SHAMD5_DIGESTCOUNT register to 0.
3. Set the CLOSE_HASH bit of the SHA Mode (SHAMD5_MODE) register to let the SHA engine do the padding. If the hash is computed in one shot, the length of the message can be any value up to 128 MB. To process an intermediate hash digest, the CLOSE_HASH bit is set to 0, in which case the packets hashed must be 64 bytes; the last packet must be hashed with the CLOSE_HASH bit set to 1.
4. Specify the LENGTH field in the SHA Length (SHAMD5_LENGTH) register of the hash data to process in bytes.

After the configuration is complete, the INPUT_READY status bit equals 1 in the SHA Interrupt Status (SHAMD5_IRQSTATUS) register (regardless of whether or not the M_INPUT_READY bit in the SHAMD5_IRQENABLE register is set). When this bit is set, it indicates the SHA engine can receive the data to process. Data must be written to the 16 × 32-bit SHAMD5_DATA_n_IN registers that provide storage for one 64-byte block of data. Unless the CLOSE_HASH bit is set, all of the SHAMD5_DATA_n_IN input buffers must be filled. Data can be written by single write accesses to the 16 registers from a processor or by a DMA transfer.

For μDMA transfers, the PDMA_EN bit must be set in the SHAMD5_SYSCONFIG register, and the appropriate mask bits must be set in the SHAMD5_DMAIM register before starting the new hash. If the μDMA is used for transfers, the SHAMD5_IRQENABLE register should be clear so all interrupts are generated through the μDMA interrupt registers.

The μDMA must be configured to transfer 16 data words of 32 bits each time it is triggered by a μDMA request from the SHA/MD5 module. The 16 data words written are sent to the 16 SHAMD5_DATA_n_IN registers.

The module detects that a 64-byte block is available, then moves the data to a working register space for processing and asserts the INPUT_READY bit in the SHAMD5_IRQSTATUS register to 1. If the PDMA_EN bit in the SHAMD5_SYSCONFIG register has been set to 1, a new μDMA request triggers a new block transfer; otherwise, the processor polls the INPUT_READY bit and writes the 16 data words of 32 bits when it equals 1.

This operation is repeated until the length of the message to hash is reached. The OUPUT_READY bit in the SHAMD5_IRQSTATUS register then indicates that the hash operation is complete. If the PIT_EN bit in the SHAMD5_SYSCONFIG register is set, an interrupt (active low) is also generated to indicate the hash completion.

The processor can then read the eight digest registers A through H that contain the hash or HMAC result. If the hash is an intermediate result of a larger hash, the digest count register must also be read and saved.

Copyright © 2017, Texas Instruments Incorporated

NOTE: The number of digest registers used depends on the algorithm selected for the SHA/MD5 module (MD5, SHA-1, SHA-224, or SHA-256).

Table 19-3. Outer Digest Registers

Register	Address	MD5 (Read/Write)	SHA-1 (Read/Write)	SHA-2 (Read/Write)	HMAC Key Processing (write)
SHAMD5_ODIGEST_A	0x000	Outer digest [127:96]	Outer digest [159:128]	Outer digest [255:224]	HMAC Key [31:0]
SHAMD5_ODIGEST_B	0x004	Outer digest [95:64]	Outer digest [127:96]	Outer digest [223:192]	HMAC key [63:32]
SHAMD5_ODIGEST_C	0x008	Outer digest [63:32]	Outer digest [95:64]	Outer digest [191:160]	HMAC key [95:64]
SHAMD5_ODIGEST_D	0x00C	Outer digest [31:0]	Outer digest [63:32]	Outer digest [159:128]	HMAC key [127:96]
SHAMD5_ODIGEST_E	0x010		Outer digest [31:0]	Outer digest [127:96]	HMAC key [159:128]
SHAMD5_ODIGEST_F	0x014			Outer digest [95:64]	HMAC key [191:160]
SHAMD5_ODIGEST_G	0x018			Outer digest [63:32]	HMAC key [223:192]
SHAMD5_ODIGEST_H	0x01C			Outer digest [31:0]	HMAC key [255:224]

Table 19-4. Inner Digest Registers

Register	Address	MD5 (Read/Write)	SHA-1 (Read/Write)	SHA-2 (Read/Write)	SHA-256 (Read/Write)	HMAC Key Processing (write)
SHAMD5_IDIGEST_A	0x020	Inner digest [127:96]	Inner digest [159:128]	Inner digest [223:192]	Inner digest [255:224]	HMAC key [287:256]
SHAMD5_IDIGEST_B	0x024	Inner digest [95:64]	Inner digest [127:96]	Inner digest [191:160]	Inner digest [223:192]	HMAC key [319:288]
SHAMD5_IDIGEST_C	0x028	Inner digest [63:32]	Inner digest [95:64]	Inner digest [159:128]	Inner digest [191:160]	HMAC key [351:320]
SHAMD5_IDIGEST_D	0x02C	Inner digest [31:0]	Inner digest [63:32]	Inner digest [127:96]	Inner digest [159:128]	HMAC key [383:352]
SHAMD5_IDIGEST_E	0x030		Inner digest[31:0]	Inner digest [95:64]	Inner digest [127:96]	HMAC key [415:384]
SHAMD5_IDIGEST_F	0x034			Inner digest [63:32]	Inner digest [95:64]	HMAC key [447:416]
SHAMD5_IDIGEST_G	0x038			Inner digest [31:0]	Inner digest [63:32]	HMAC key [479:448]
SHAMD5_IDIGEST_H	0x03C				Inner digest[31:0]	HMAC key [511:480]

NOTE: Inner digests are initial, intermediate, and result digests.

Copyright © 2017, Texas Instruments Incorporated

19.1.3.1.2 Outer Digest Registers

The SHAMD5_ODIGEST_A to SHAMD5_ODIGEST_H registers are relevant only for HMAC operations; the contents are ignored for hash operations.

Before writing to the digest registers, the operation must be configured in the SHA Mode (SHAMD5_MODE) register. For HMAC operations without key processing, the HMAC_KEY_PROC bit must be clear in the SHAMD5_MODE register before starting operations. Once the algorithm has been programmed in the SHAMD5_MODE register, only the relevant digest registers for the selected algorithm must be written:

- SHAMD5_ODIGEST_A to SHAMD5_ODIGEST_D registers for MD5
- SHAMD5_ODIGEST_A to SHAMD5_ODIGEST_E registers for SHA-1
- SHAMD5_ODIGEST_A to SHAMD5_ODIGEST_H registers for SHA-2 (224 to 256)

When HMAC key processing is enabled (HMAC_KEY_PROC=1), these registers must be written with the lower 256 bits of the HMAC key to be processed in little-endian format (first byte of key string in bits [7:0]).

NOTE: If the HMAC key is less than 512 bits, it must be properly padded with zeros: all 16 HMAC key registers must be written explicitly; the core does not pad. Additionally, if the HMAC key is larger than 512 bits, the host must perform a preprocessing step to reduce it to one 512-bit block. This involves hashing the large key and padding the hash result with zeros until it is 512 bits wide.

The computed outer digest can be read from these registers when the SHA Interrupt Status (SHAMD5_IRQSTATUS) register when the OUTPUT_READY bit has been set indicating that the operation is done.

NOTE: If no HMAC key processing is performed, the value read is identical to the value written initially. The MD5 outer digest is available from registers SHAMD5_ODIGEST_A to SHAMD5_ODIGEST_D, the SHA-1 outer digest from registers SHAMD5_ODIGEST_A to SHAMD5_ODIGEST_E, and the SHA-224 and SHA-256 outer digest from registersSHAMD5_ODIGEST_A to SHAMD5_ODIGEST_H.

NOTE: The HMAC key is not preserved. If another block must be authenticated using the same key, the key must be reloaded by the host. If the same key must be used many times, it is advisable to do a HMAC key processing-only pass to obtain the inner and outer digest precomputes and load these precomputes for subsequent passes (only the inner digest must be reloaded if the outer digest is not modified by the host), because this saves two hash blocks worth of computation time.

19.1.3.1.3 Inner Digest Registers

The SHAMD5_IDIGEST_A to SHAMD5_IDIGEST_H registers are used for HMAC and hash operations. The inner/initial digest for HMAC and hash continue operations (HMAC_KEY_PROC = 0 and ALGO_CONSTANT = 0) must be written to these registers before starting the operation by writing to the SHAMD5_MODE register. Only the relevant digest registers for the selected algorithm must be written:

- SHAMD5_IDIGEST_A to SHAMD5_IDIGEST_D registers for MD5
- SHAMD5_IDIGEST_A to SHAMD5_IDIGEST_E registers for SHA-1
- SHAMD5_IDIGEST_A to SHAMD5_IDIGEST_H registers for SHA-2

When ALGO_CONSTANT = 1 in the SHAMD5_MODE register, the SHA Inner Digest n (SHAMD5_IDIGEST_n) registers do not need to be written by the application because they are overwritten with the appropriate algorithm constants.

When HMAC_KEY_PROC is 1, these registers must be written with the upper 256 bits of the HMAC key to be processed in little-endian format (first byte of key string in bits [7:0]).

Copyright © 2017, Texas Instruments Incorporated

NOTE: If the HMAC key is less than 512 bits, it must be properly padded with zeros: all 16 HMAC key registers must be written explicitly; the core does not pad. Additionally, if the HMAC key is larger than 512 bits, the host must perform a preprocessing step to reduce it to one 512-bit block. This involves hashing the large key and padding the hash result with zeros until it is 512 bits wide.

The order of the bytes within the digest is such that it can be fed back unmodified into the little-endian data input when preprocessing HMAC keys larger than 64 bytes, or it can typically be inserted unmodified into a little-endian data stream (for example, IPSEC packets), regardless of the selected algorithm.

NOTE: The HMAC key or inner digest is not preserved. If another block must be authenticated using the same key, the key or inner digest must be reloaded by the host. If the same key must be used many times, do a HMAC key processing-only pass to obtain the inner and outer digest precomputes and load these precomputes for subsequent passes (only the inner digest must be reloaded if the outer digest is not modified by the host), because this saves two hash blocks worth of computation time.

19.1.3.1.4 Closing a Hash

The amount of data to hash is not necessarily a multiple of 64 bytes. The CLOSE_HASH bit in the SHAMD5_MODE register is set to append padding so that the message size becomes a multiple of 64 bytes. Consequently, a minimum of 9 bytes must be added to the message. Nine bytes is the minimum number of bytes that contains the minimum 65-bit padding specified by FIPS 180-1.

If the size of the last block of data is less than or equal to 55 bytes, no additional 64-byte block is required. However, if the last block of data contains more than 55 bytes, an extra 64-byte block must be added to make the padding as specified by FIPS 180-1. This extra block is added automatically by the hardware; thus, the module is fed with a 64-byte block of data. However, appending a pad on the last block of data can result in the creation of an extra 64-byte block.

The one or two last blocks that contain the padding are processed in the same way as the other blocks. Hash completion is then indicated in the same way as for a new hash, and the hash result can be read in the digest registers. The SHAMD5_DIGESTCOUNT register returns restored Digest Count + Length when it is read, and hashing completes.

Assuming a message of 129 bytes, Table 19-5 shows the SHA digest for three passes. Table 19-6 shows the SHA digest for one pass.

Table 19-5. SHA Digest Processed in Three Passes

	Digest (A to E)	SHAMD5_DIGESTCOUNT	SHAMD5_MODE and SHAMD5_LENGTH	SHAMD5_DATA_n_IN
First pass			WRITE: LENGTH=64 ALGO (dependent on the algorithm to apply) ALGO_CONSTANT=1 CLOSE_HASH=0	First 64 bytes of message
Second pass	Round 1 digest calculation	WRITE: 64	WRITE: LENGTH=64 ALGO (dependent on the algorithm to apply) ALGO_CONSTANT=0 CLOSE_HASH=0	Second 64 bytes of message
Third pass	Round 2 digest calculation	WRITE: 128	Write: LENGTH=1 ALGO (dependent on the algorithm to apply) ALGO_CONSTANT=0 CLOSE_HASH=1	Last byte of message
	Final digest	READ: 129		

Copyright © 2017, Texas Instruments Incorporated

If the three passes are not performed in succession, the digest registers must be saved and restored for the next use of the SHA/MD5 engine. If the rounds are performed consecutively, there is no need to do anything with the digest registers.

Table 19-6. SHA Digest Processed in One Pass

	Digest (A to E)	SHAMD5_DIGEST_COUNT	SHAMD5_MODE and SHAMD5_LENGTH	SHAMD5_DATA_n_IN
First pass			WRITE: LENGTH=129 ALGO (dependent on the algorithm to apply) ALGO_CONSTANT=1 CLOSE_HASH=1	First 64 bytes of message
	Round 1 digest calculation			Second 64 bytes of message
	Round 2 digest calculation			Last byte of message
	Final digest	Read: 129		

19.1.3.2 MD5 Mode

19.1.3.2.1 Starting a New Hash

To start a new hash, perform the following steps:

1. Set the ALGO bit field in the SHAMD5_MODE register to 0x0 to select the MD5 algorithm.
2. Set the ALGO_CONSTANT bit to 1 in the SHAMD5_MODE register to initialize all digest registers from SHAMD5_ODIGEST_A/SHAMD5_IDIGEST_A to SHAMD5_ODIGEST_H/SHAMD5_IDIGEST_H with default values specified by the algorithm, and set the SHAMD5_DIGESTCOUNT register to 0.
3. Specify the LENGTH field in the SHAMD5_LENGTH register of the hash data to process in bytes.
4. Set the CLOSE_HASH bit in the SHAMD5_MODE register to let the SHA/MD5 engine do the padding. If MD5 is computed in one shot, the length of the message can be any value up to . To process an intermediate MD5 digest, the CLOSE_HASH bit is set to 0, in which case packets to be hashed must be 64 bytes; the last packet must be hashed with the CLOSE_HASH bit set to 1.

After the configuration is complete, the hash engine can receive the data to process (the INPUT_READY bit is 1 in the SHAMD5_IRQSTATUS register). Data must be written to the 16 × 32-bit SHAMD5_DATA_n_IN registers that provide storage for one 64-byte block of data. Unless the CLOSE_HASH bit is set in the SHAMD5_MODE register, the SHAMD5_DATA_n_IN 64-byte input buffer must be filled. Data can be written by single write transactions to the 16 registers from a processor or by a μDMA transfer.

For a μDMA transfer, the SDAM_EN bit must be set in the SHAMD5_SYSCONFIG register before starting the new hash and the μDMA channel for SHA/MD5 0 data in request must be configured. The μDMA must be configured to the appropriate hash transfer size. A μDMA done is asserted after the last SHAMD5_DATA_n_IN register is filled.

The module detects that a 64-byte block is available, and then moves the data to a working register space for processing and sets the INPUT_READY bit to 1 in the SHAMD5_IRQSTATUS register. If the PDMA_EN bit is set in the SHAMD5_SYSCONFIG register, then a new μDMA request triggers a new block transfer; otherwise, the processor polls the INPUT_READY bit in the SHAMD5_IRQSTATUS register and writes the 16 data words of 32 bits when it equals 1.

This operation repeats until the length of the message to hash is reached. The OUTPUT_READY bit in the SHAMD5_IRQSTATUS register then indicates that the hash operation is complete. If the PIT_EN bit in the SHAMD5_SYSCONFIG register is set, an interrupt (active low) is also generated to indicate the hash completion.

Copyright © 2017, Texas Instruments Incorporated

19.1.3.2.2 Closing a Hash

The amount of data to hash is not necessarily a multiple of 64 bytes. In this case, the CLOSE_HASH bit in the SHAMD5_MODE register must be set to append padding so that the message size becomes a multiple of 64 bytes. See the previous MD5 algorithm for more information on padding.

The module is fed with a 64-byte block of data, if enough data is available. However, a pad is appended on the last block of data, which can result in the creation of an extra 64-byte block.

The one or two last blocks that contain the padding are processed the same way as the other blocks. Hash completion is then indicated in the same way as for a new hash, and the 128-bit result can be read in the digest registers. The SHAMD5_DIGESTCOUNT register returns restored digest count and length when it is read, and hashing completes.

19.1.3.3 Generating an Software Interrupt

If the PIT_EN bit is 1 in the SHAMD5_SYSCONFIG register, an interrupt is generated at the completion of the hash by the following steps:

1. Receive last block of data (= 64 bytes). The number of data bytes defined by the SHAMD5_LENGTH register is received in the digest registers, from SHAMD5_ODIGEST_A/SHAMD5_IDIGEST_A to SHAMD5_ODIGEST_H/SHAMD5_IDIGEST_H.
2. If required, apply padding to the last block of data.
3. Hash the last block of data (80 cycles in SHA-1 mode and 64 cycles in MD5, SHA-224, and SHA-256 modes).
4. If required, add an extra 64-byte block of data to complete the padding.
5. Hash this extra block of data (80 cycles in SHA-1 mode and 64 cycles in MD5, SHA-224, and SHA-256 modes).
6. An interrupt is generated (active low).

19.1.4 SHA/MD5 Programming Guide

This section covers the hardware programming sequences for configuration and use of the SHA/MD5 module.

19.1.4.1 Global Initialization

19.1.4.1.1 Surrounding Modules Global Initialization

The following list describes the requirements for initializing the SHAMD5 and associated modules:

1. Enable the clock to cryptography module (that includes AES) by setting the R0 bit in the (CRYPTOCLKEN) register in the application reset and clock management module (physical address: 0x4402 50B8)
2. Configure the SHA μDMA channels for Context In, Context Out, Data In, or Data Out by programming the appropriate encoding value in the DMA Channel Map Select n (DMA_CHMAPn) register in the μDMA module.
3. If the SHA channels are configured in the μDMA, enable the required SHA DMA requests by programming bits [9:5] of the SHAMD5_SYSCONFIG register, in addition to the completion interrupts in the SHA DMA Interrupt Mask (DTHE_SHA_IM) register, CRC, and cryptographic modules offset 0x020.

19.1.4.1.2 Starting a New HMAC using the SHA-1 Hash Function and HMAC Key Processing

The following procedure is used to begin a new HMAC operation, starting from initial digest values.

1. Load the key value in the SHAMD5_ODIGEST_A/SHAMD5_IDIGEST_A to SHAMD5_ODIGEST_H/SHAMD5_IDIGEST_H registers.
2. Pad the rest of the SHA _ODIGEST_x and SHAMD5_IDIGEST registers with zeros.
3. Load the message in the SHAMD5_DATA_n_IN FIFO registers.

Copyright © 2017, Texas Instruments Incorporated

4. Enable HMAC key processing by setting the HMAC_KEY_PROC bit in the SHAMD5_MODE register.
5. Select the SHA-1 hash function by programming the ALGO bit in the SHAMD5_MODE register to 0x1.
6. Select the already loaded key by programming the ALGO_CONSTANT bit in the SHAMD5_MODE register to 0x0.
7. Set the CLOSE_HASH bit and the HMAC_OUTER_HASH bit in the SHAMD5_MODE register so that appropriate padding is inserted and the outer hash is performed immediately after the inner hash has finished.
8. Program the SHAMD5_LENGTH register with the block length. Writing this register triggers the HMAC engine to begin processing.

NOTE: If more than one pass is used during the process (SHAMD5_MODE[4] CLOSE_HASH == 0x0), the block length value must be a 64-byte multiple. From this point, three operational modes are possible to continue with the processing: polling, interrupt, and DMA. For more information, see the Operational Modes Configuration section.

19.1.4.1.3 Subsequence - Continuing a Prior HMAC Using the SHA-1 Hash Function

The procedure in continues a prior HMAC calculation interrupted from a high priority task.

Table 19-7. Continuing a Prior HMAC

Step	Register/Bit Field/Programming Model	Value
Load the initial digest for the used hash algorithm.	SHAMD5_IDIGEST_i[31:0] DATA	—
Restore the digest counter with the value before the switch to the high-priority task.	SHAMD5_DIGEST_COUNT[31:0] COUNT	—
Use the already loaded in the engine key.	SHAMD5_MODE[5] HMAC_KEY_PROC	0x0
Do not use the constants of the selected hash algorithm.	SHAMD5_MODE[3] ALGO_CONSTANT	0x0
Select the SHA-1 hash algorithm.	SHAMD5_MODE[2:1] ALGO	0x1
IF: This is the last 64-byte data block from the input message?	User decision	
Close the hash; an appropriate padding is added.	SHAMD5_MODE[4] CLOSE_HASH	0x1
ENDIF		
Load the block length; this is the trigger to start processing.	SHAMD5_LENGTH[31:0] LENGTH	—

NOTE: This initial digest is the intermediate digest from the previous calculation before switching to the high priority task. The value is equal to context1 in .

The value is equal to context2 in .

The block length is equal to the context3 value in .

19.1.4.1.4 Subsequence - Hashing a Key Bigger than 512 Bits with the SHA-1 Hash Function

The procedure in creates a hash value from the key in only one pass.

Table 19-8. SHA-1 Apply on the Key

Step	Register/Bit Field/Programming Model	Value
Load the first part of the key. (Here, the key is like a message.)	SHAMD5_DATA_n_IN (i = 0 to 15)	—
Select the SHA-1 hash function.	SHAMD5_MODE[2:1] ALGO	0x1
Select a new hash operation.	SHAMD5_MODE[3] ALGO_CONSTANT	0x1
Close the hash; the key is processed in single pass.	SHAMD5_MODE[4] CLOSE_HASH	0x1

Copyright © 2017, Texas Instruments Incorporated

19.1.4.1.5 Operational Modes Configuration

SHA/MD5 polling mode: Figure 19-2 shows the SHA/MD5 polling mode. SHA/MD5 polling mode uses the following registers: SHAMD5_IRQSTATUS, SHAMD5_DATA_n_IN, SHAMD5_ODIGEST_A, SHAMD5_DIGEST_COUNT, and SHAMD5_LENGTH.

Figure 19-2. SHA/MD5 Polling Mode

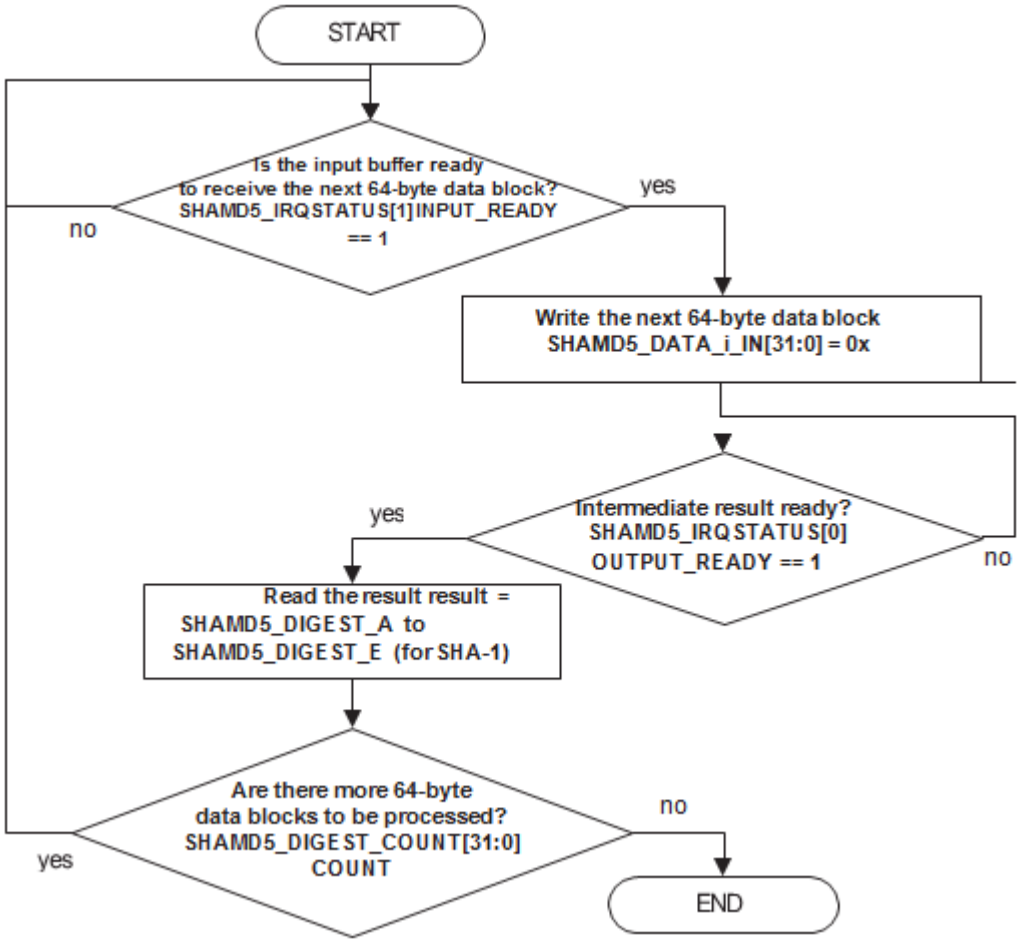

SHA/MD5 interrupt mode: the procedure in Table 19-9 configures the SHA/MD5 module to work in interrupt-based mode. (For the interrupt subroutine, see the Interrupt Servicing section.)

Table 19-9. Interrupt Mode

Step	Register/Bit Field/Programming Model	Value
Enable the interrupt request to the processor	SHAMD5_SYSCONFIG[2] P IT_EN	0x1
Load the message length; this is the trigger to start processing.	SHAMD5_LENGTH[31:0] LENGTH	—

SHA/MD5 DMA mode: the procedure in Table 19-10 configures the SHA/MD5 module to work in DMA-based mode.

Table 19-10. DMA Mode

Step	Register/Bit Field/Programming Model	Value
Enable the DMA request to the CDMA controller.	SHAMD5_SYSCONFIG[3] P DMA_EN	0x1
Load the message length; this is the trigger to start processing.	SHAMD5_LENGTH[31:0] LENGTH	—

Copyright © 2017, Texas Instruments Incorporated

19.1.4.1.6 SHA/MD5 Event Servicing

19.1.4.1.6.1 Interrupt Servicing

This section describes the interrupt event servicing of the module. Figure 19-3 shows the interrupt subroutine. The following registers are used in the SHA/MD5 interrupt routine: SHAMD5_IRQSTATUS, SHAMD5_DATA_n_IN, SHAMD5_ODIGEST_A, SHAMD5_DIGEST_COUNT, SHAMD5_LENGTH, and SHAMD5_IDIGEST_A.

Figure 19-3. SHA/MD5 Interrupt Subroutine

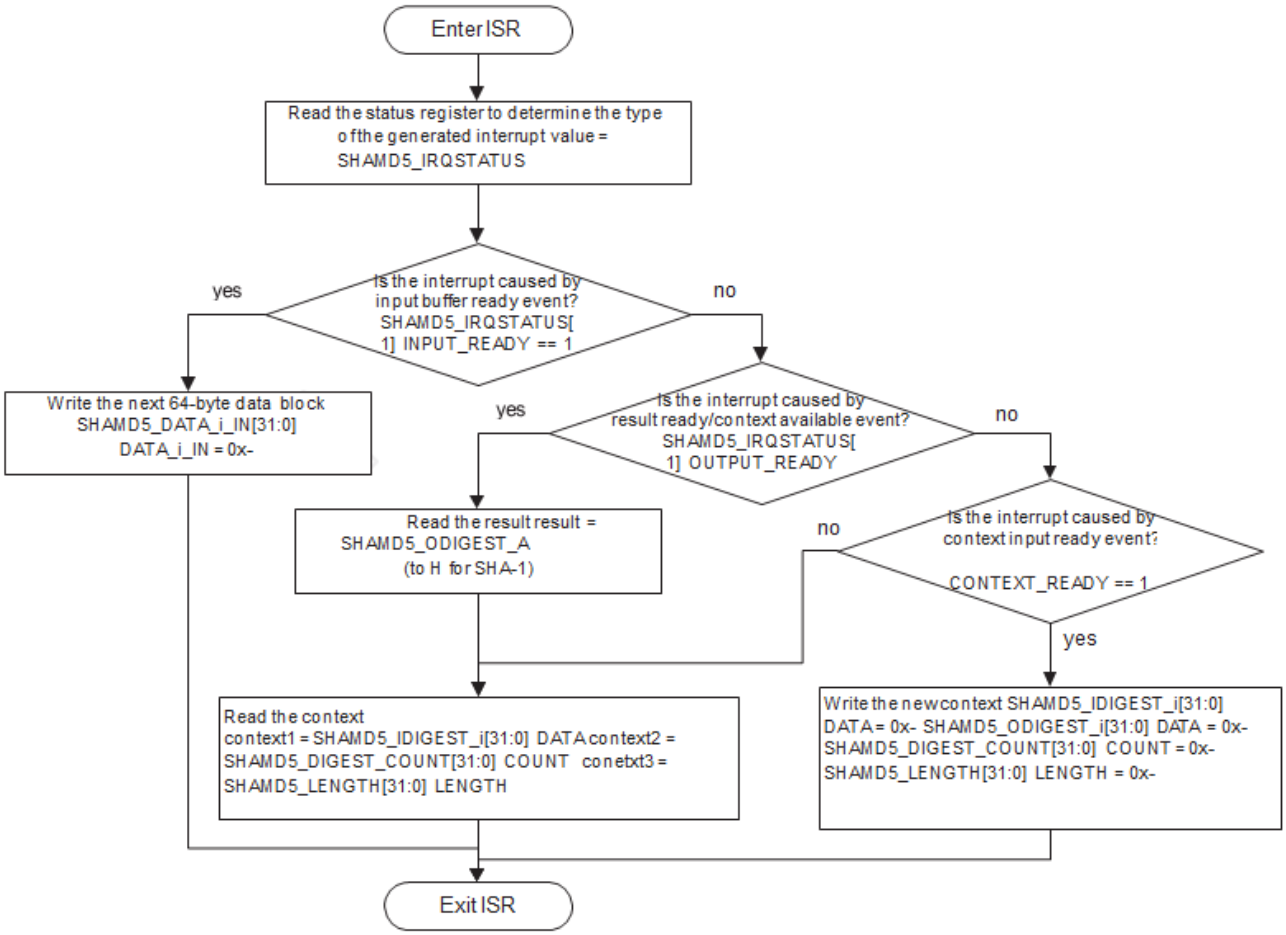

Copyright © 2017, Texas Instruments Incorporated

19.2 SHA-MD5 Registers

SHAMD5 functional registers offset : 0x4403 5000.

Table 19-11 lists the memory-mapped registers for SHA/MD5. All register offset addresses not listed in Table 19-11 should be considered as reserved locations and the register contents should not be modified.

Table 19-11. SHA-MD5 Registers

Offset	Acronym	Register Name	Section
0h	SHAMD5_ODIGEST_A	Outer Digest Register A	Section 19.2.1
4h	SHAMD5_ODIGEST_B	Outer Digest Register B	Section 19.2.2
8h	SHAMD5_ODIGEST_C	Outer Digest Register C	Section 19.2.3
Ch	SHAMD5_ODIGEST_D	Outer Digest Register D	Section 19.2.4
10h	SHAMD5_ODIGEST_E	Outer Digest Register E	Section 19.2.5
14h	SHAMD5_ODIGEST_F	Outer Digest Register F	Section 19.2.6
18h	SHAMD5_ODIGEST_G	Outer Digest Register G	Section 19.2.7
1Ch	SHAMD5_ODIGEST_H	Outer Digest Register H	Section 19.2.8
20h	SHAMD5_IDIGEST_A	Inner Digest Register A	Section 19.2.9
24h	SHAMD5_IDIGEST_B	Inner Digest Register B	Section 19.2.10
28h	SHAMD5_IDIGEST_C	Inner Digest Register C	Section 19.2.11
2Ch	SHAMD5_IDIGEST_D	Inner Digest Register D	Section 19.2.12
30h	SHAMD5_IDIGEST_E	Inner Digest Register E	Section 19.2.13
34h	SHAMD5_IDIGEST_F	Inner Digest Register F	Section 19.2.14
38h	SHAMD5_IDIGEST_G	Inner Digest Register G	Section 19.2.15
3Ch	SHAMD5_IDIGEST_H	Inner Digest Register H	Section 19.2.16
40h	SHAMD5_DIGEST_COUNT	Digest Count register	Section 19.2.17
44h	SHAMD5_MODE	SHA Mode register	Section 19.2.18
48h	SHAMD5_LENGTH	SHA Length register	Section 19.2.19
80h	SHAMD5_DATA0_IN	Data input message 0	Section 19.2.20
84h	SHAMD5_DATA1_IN	Data input message 1	Section 19.2.21
88h	SHAMD5_DATA2_IN	Data input message 2	Section 19.2.22
8Ch	SHAMD5_DATA3_IN	Data input message 3	Section 19.2.23
90h	SHAMD5_DATA4_IN	Data input message 4	Section 19.2.24
94h	SHAMD5_DATA5_IN	Data input message 5	Section 19.2.25
98h	SHAMD5_DATA6_IN	Data input message 6	Section 19.2.26
9Ch	SHAMD5_DATA7_IN	Data input message 7	Section 19.2.27
A0h	SHAMD5_DATA8_IN	Data input message 8	Section 19.2.28
A4h	SHAMD5_DATA9_IN	Data input message 9	Section 19.2.29
A8h	SHAMD5_DATA10_IN	Data input message 10	Section 19.2.30
ACh	SHAMD5_DATA11_IN	Data input message 11	Section 19.2.31
B0h	SHAMD5_DATA12_IN	Data input message 12	Section 19.2.32
B4h	SHAMD5_DATA13_IN	Data input message 13	Section 19.2.33
B8h	SHAMD5_DATA14_IN	Data input message 14	Section 19.2.34
BCh	SHAMD5_DATA15_IN	Data input message 15	Section 19.2.35
110h	SHAMD5_SYSCONFIG	System Config Register	Section 19.2.36
118h	SHAMD5_IRQSTATUS	IRQ Status register	Section 19.2.37
11Ch	SHAMD5_IRQENABLE	IRQ Enable register	Section 19.2.38
810h	DTHE_SHA_IM	SHA Interrupt Mask Set register	Section 19.2.39
814h	DTHE_SHA_RIS	SHA Interrupt Raw Interrupt Status register	Section 19.2.40
818h	DTHE_SHA_MIS	SHA Interrupt Masked interrupt Status register	Section 19.2.41
81Ch	DTHE_SHA_IC	SHA Interrupt Clear Interrupt Status register	Section 19.2.42

Copyright © 2017, Texas Instruments Incorporated

Figure 19-4. Overview of Public World, Inner and Outer Digest Registers and Usage for MD5, SHA-1, SHA-224/256

	Memory Usage for Public World Inner/HMAC Key and HMAC Key Processing for MD5, SHA-1 SHA-224 and SHA-256					
	Register Address	MD5 (Read/Write)	SHA-1 (Read/Write)	SHA-224, SHA-256 (Read/Write)		HMAC Key Proc. (Write)
Public World, Hash HMAC Key Registers	P_HASH_ODIGEST_A 0x1000	Outer Digest [127:96]	Outer Digest [159:128]	Outer Digest [255:224]		HMAC Key [31:0]
	P_HASH_ODIGEST_B 0x1004	Outer Digest [95:64]	Outer Digest [127:96]	Outer Digest [223:192]		HMAC Key [63:32]
	P_HASH_ODIGEST_C 0x1008	Outer Digest [63:32]	Outer Digest [95:64]	Outer Digest [191:160]		HMAC Key [95:64]
	P_HASH_ODIGEST_D 0x100C	Outer Digest [31:0]	Outer Digest [63:32]	Outer Digest [159:128]		HMAC Key [127:96]
	P_HASH_ODIGEST_E 0x1010		Outer Digest [31:0]	Outer Digest [127:96]		HMAC Key [159:128]
	P_HASH_ODIGEST_F 0x1014			Outer Digest [95:64]		HMAC Key [191:160]
	P_HASH_ODIGEST_G 0x1018			Outer Digest [63:32]		HMAC Key [223:192]
	P_HASH_ODIGEST_H 0x101C			Outer Digest [31:0]		HMAC Key [255:224]
	Register Address	MD5 (Read/Write)	SHA-1 (Read/Write)	SHA-224 (Read)	SHA-224, SHA-256 (Read/Write)	HMAC Key Proc. (Write)
Public World, Hash Inner Digest Registers	P_HASH_IDIGEST_A 0x1020	Inner Digest* [127:96]	Inner Digest* [159:128]	Result Digest [223:192]	Inner Digest* [255:224]	HMAC Key [287:256]
	P_HASH_IDIGEST_B 0x124/0x1244	Inner Digest* [95:64]	Inner Digest* [127:96]	Result Digest [191:160]	Inner Digest* [223:192]	HMAC Key [319:288]
	P_HASH_IDIGEST_C 0x1028/0x1248	Inner Digest* [63:32]	Inner Digest* [95:64]	Result Digest [159:1228]	Inner Digest* [191:160]	HMAC Key [351:320]
	P_HASH_IDIGEST_D 0x102C/	Inner Digest* [31:0]	Inner Digest* [63:32]	Result Digest [128:96]	Inner Digest* [159:128]	HMAC Key [383:352]
	P_HASH_IDIGEST_E 0x1030		Inner Digest* [31:0]	Result Digest [95:64]	Inner Digest* [128:96]	HMAC Key [415:384]
	P_HASH_IDIGEST_F 0x1034			Result Digest [63:32]	Inner Digest* [95:64]	HMAC Key [447:416]
	P_HASH_IDIGEST_G 0x1038			Result Digest [31:0]	Inner Digest* [63:32]	HMAC Key [479:448
	P_HASH_IDIGEST_H 0x103C				Inner Digest* [31:0]	HMAC Key [511:480]

* Note: Inner Digest (initial, intermediate and result digest)

Outer digest registers are only relevant for HMAC operations; contents are ignored for hash operations.

- SHAMD5_ODIGEST_A
- SHAMD5_ODIGEST_B

Copyright © 2017, Texas Instruments Incorporated

- SHAMD5_ODIGEST_C
- SHAMD5_ODIGEST_D
- SHAMD5_ODIGEST_E
- SHAMD5_ODIGEST_F
- SHAMD5_ODIGEST_G
- SHAMD5_ODIGEST_H

The outer digest for HMAC operations without key processing (HMAC key processing = 0) must be written to these registers prior to starting the operation by writing to SHAMD5_MODE. Only the relevant digest registers for the selected algorithm must be written, A-D for MD5, A-E for SHA-1, A-H for SHA-2 (224 and 256).

When HMAC key processing is 1, these registers must be written with the lower 256 bits of the HMAC key to be processed, in little-endian format (first byte of key string in bits [7:0]). If the HMAC key is less than 512 bits in size, it must be properly padded to the block size with zeroes on the most significant bytes. All 16 HMAC key registers must be written explicitly, as the core does not pad the HMAC key. Additionally, if the HMAC key is larger than 512 bits, the host is responsible for performing a preprocessing step to reduce it to one 512-bit block. This involves hashing the large key and padding the hash result with zeroes until it is 512 bits wide.

The computed outer digest can be read from these registers when the status register indicates that the operation is done or suspended due to a context switch request. If no HMAC key processing is performed, the value read here would be identical to the value written initially. The MD5 outer digest is available from digest registers A-D, the SHA-1 outer digest from registers A-E, and the SHA-224 and 256 outer digest from registers A-H.

The HMAC key itself cannot be read back from these registers, but it is preserved for future processing as long as the SHAMD5_ODIGEST registers are not overwritten; this allows reuse of the HMAC key (without having to redo the HMAC key processing) for subsequent data blocks without having to reload it. This is done by setting HMAC key processing to 0 and Reuse HMAC key to 1 in the SHAMD5_MODE register.

Copyright © 2017, Texas Instruments Incorporated

19.2.1 SHAMD5_ODIGEST_A Register (Offset = 0h) [reset = 0h]

SHAMD5_ODIGEST_A is shown in Figure 19-5 and described in Table 19-12.

Return to Summary Table.

WRITE: Outer Digest [127:96] for MD5, [159:128] for SHA-1, [255:224] for SHA-2 / HMAC Key [31:0] for HMAC key proc

READ: Outer Digest [127:96] for MD5, [159:128] for SHA-1, [255:224] for SHA-2

Figure 19-5. SHAMD5_ODIGEST_A Register

31	30	29	28	27	26	25	24	23	22	21	20	19	18	17	16	15	14	13	12	11	10	9	8	7	6	5	4	3	2	1	0
DATA																															
R/W-0h																															

LEGEND: R/W = Read/Write; R = Read only; W1toCl = Write 1 to clear bit; *-n* = value after reset

Table 19-12. SHAMD5_ODIGEST_A Register Field Descriptions

Bit	Field	Type	Reset	Description
31-0	DATA	R/W	0h	Data

Copyright © 2017, Texas Instruments Incorporated

19.2.2 SHAMD5_ODIGEST_B Register (Offset = 4h) [reset = 0h]

SHAMD5_ODIGEST_B is shown in Figure 19-6 and described in Table 19-13.

Return to Summary Table.

WRITE: Outer Digest [95:64] for MD5, [127:96] for SHA-1, [223:192] for SHA-2 / HMAC Key [63:32] for HMAC key proc

READ: Outer Digest [95:64] for MD5 [127:96] for SHA-1, [223:192] for SHA-2

Figure 19-6. SHAMD5_ODIGEST_B Register

31	30	29	28	27	26	25	24	23	22	21	20	19	18	17	16	15	14	13	12	11	10	9	8	7	6	5	4	3	2	1	0
DATA																															
R/W-0h																															

LEGEND: R/W = Read/Write; R = Read only; W1toCl = Write 1 to clear bit; *-n* = value after reset

Table 19-13. SHAMD5_ODIGEST_B Register Field Descriptions

Bit	Field	Type	Reset	Description
31-0	DATA	R/W	0h	Data

Copyright © 2017, Texas Instruments Incorporated

19.2.3 SHAMD5_ODIGEST_C Register (Offset = 8h) [reset = 0h]

SHAMD5_ODIGEST_C is shown in Figure 19-7 and described in Table 19-14.

Return to Summary Table.

WRITE: Outer Digest [63:32] for MD5, [95:64] for SHA-1, [191:160] for SHA-2 / HMAC Key [95:64] for HMAC key proc

READ: Outer Digest [63:32] for MD5 [95:64] for SHA-1, [191:160] for SHA-2

Figure 19-7. SHAMD5_ODIGEST_C Register

31	30	29	28	27	26	25	24	23	22	21	20	19	18	17	16	15	14	13	12	11	10	9	8	7	6	5	4	3	2	1	0
DATA																															
R/W-0h																															

LEGEND: R/W = Read/Write; R = Read only; W1toCl = Write 1 to clear bit; *-n* = value after reset

Table 19-14. SHAMD5_ODIGEST_C Register Field Descriptions

Bit	Field	Type	Reset	Description
31-0	DATA	R/W	0h	Data

Copyright © 2017, Texas Instruments Incorporated

19.2.4 SHAMD5_ODIGEST_D Register (Offset = Ch) [reset = 0h]

SHAMD5_ODIGEST_D is shown in Figure 19-8 and described in Table 19-15.

Return to Summary Table.

WRITE: Outer Digest [31:0] for MD5 [63:31] for SHA-1, [159:128] for SHA-2 / HMAC Key [127:96] for HMAC key proc

READ: Outer Digest [31:0] for MD5 [63:32] for SHA-1, [159:128] for SHA-2

Figure 19-8. SHAMD5_ODIGEST_D Register

31	30	29	28	27	26	25	24	23	22	21	20	19	18	17	16	15	14	13	12	11	10	9	8	7	6	5	4	3	2	1	0
DATA																															
R/W-0h																															

LEGEND: R/W = Read/Write; R = Read only; W1toCl = Write 1 to clear bit; *-n* = value after reset

Table 19-15. SHAMD5_ODIGEST_D Register Field Descriptions

Bit	Field	Type	Reset	Description
31-0	DATA	R/W	0h	Data

Copyright © 2017, Texas Instruments Incorporated

19.2.5 SHAMD5_ODIGEST_E Register (Offset = 10h) [reset = 0h]

SHAMD5_ODIGEST_E is shown in Figure 19-9 and described in Table 19-16.

Return to Summary Table.

WRITE: Outer Digest [31:0] for SHA-1, [127:96] for SHA-2 / HMAC Key [159:128] for HMAC key proc

READ: Outer Digest [31:0] for SHA-1, [127:96] for SHA-2

Figure 19-9. SHAMD5_ODIGEST_E Register

31	30	29	28	27	26	25	24	23	22	21	20	19	18	17	16	15	14	13	12	11	10	9	8	7	6	5	4	3	2	1	0
DATA																															
R/W-0h																															

LEGEND: R/W = Read/Write; R = Read only; W1toCl = Write 1 to clear bit; *-n* = value after reset

Table 19-16. SHAMD5_ODIGEST_E Register Field Descriptions

Bit	Field	Type	Reset	Description
31-0	DATA	R/W	0h	Data

Copyright © 2017, Texas Instruments Incorporated

19.2.6 SHAMD5_ODIGEST_F Register (Offset = 14h) [reset = 0h]

SHAMD5_ODIGEST_F is shown in Figure 19-10 and described in Table 19-17.

Return to Summary Table.

WRITE: Outer Digest [95:64] for SHA-2 / HMAC Key [191:160] for HMAC key proc

READ: Outer Digest [95:64] for SHA-2

Figure 19-10. SHAMD5_ODIGEST_F Register

31	30	29	28	27	26	25	24	23	22	21	20	19	18	17	16	15	14	13	12	11	10	9	8	7	6	5	4	3	2	1	0
DATA																															
R/W-0h																															

LEGEND: R/W = Read/Write; R = Read only; W1toCl = Write 1 to clear bit; *-n* = value after reset

Table 19-17. SHAMD5_ODIGEST_F Register Field Descriptions

Bit	Field	Type	Reset	Description
31-0	DATA	R/W	0h	Data

Copyright © 2017, Texas Instruments Incorporated

19.2.7 SHAMD5_ODIGEST_G Register (Offset = 18h) [reset = 0h]

SHAMD5_ODIGEST_G is shown in Figure 19-11 and described in Table 19-18.

Return to Summary Table.

WRITE: Outer Digest [63:32] for SHA-2 / HMAC Key [223:192] for HMAC key proc

READ: Outer Digest [63:32] for SHA-2

Figure 19-11. SHAMD5_ODIGEST_G Register

31	30	29	28	27	26	25	24	23	22	21	20	19	18	17	16	15	14	13	12	11	10	9	8	7	6	5	4	3	2	1	0
DATA																															
R/W-0h																															

LEGEND: R/W = Read/Write; R = Read only; W1toCl = Write 1 to clear bit; *-n* = value after reset

Table 19-18. SHAMD5_ODIGEST_G Register Field Descriptions

Bit	Field	Type	Reset	Description
31-0	DATA	R/W	0h	Data

Copyright © 2017, Texas Instruments Incorporated

19.2.8 SHAMD5_ODIGEST_H Register (Offset = 1Ch) [reset = 0h]

SHAMD5_ODIGEST_H is shown in Figure 19-12 and described in Table 19-19.

Return to Summary Table.

WRITE: Outer Digest [31:0] for SHA-2 / HMAC Key [255:224] for HMAC key proc

READ: Outer Digest [31:0] for SHA-2

Figure 19-12. SHAMD5_ODIGEST_H Register

31	30	29	28	27	26	25	24	23	22	21	20	19	18	17	16	15	14	13	12	11	10	9	8	7	6	5	4	3	2	1	0
DATA																															
R/W-0h																															

LEGEND: R/W = Read/Write; R = Read only; W1toCl = Write 1 to clear bit; *-n* = value after reset

Table 19-19. SHAMD5_ODIGEST_H Register Field Descriptions

Bit	Field	Type	Reset	Description
31-0	DATA	R/W	0h	Data

Inner digest registers: The following registers hold the inner digest for HMAC and hash operations:

- SHAMD5_IDIGEST_A
- SHAMD5_IDIGEST_B
- SHAMD5_IDIGEST_C
- SHAMD5_IDIGEST_D
- SHAMD5_IDIGEST_E
- SHAMD5_IDIGEST_F
- SHAMD5_IDIGEST_G
- SHAMD5_IDIGEST_H

The inner or initial digest for HMAC and hash continue (HMAC key processing = 0 and use algorithm constants = 0) operations must be written to these registers prior to starting the operation by writing to S_HASH_MODE. Only the relevant digest registers for the selected algorithm must be written, A-D for MD5, A-E for SHA-1, A-H for SHA-2. When use algorithm constants is 1, these registers do need not to be written, because they are overwritten with the appropriate algorithm constants.

For HMAC operations with key preprocessing enabled (HMAC key processing = 1), these registers must be written with the upper 256 bits of the HMAC key, in little-endian format (first byte of key string in bits [7:0]). If the HMAC key is less than 512 bits in size, it must be padded to the block size with zeroes on the most significant bytes. All 16 HMAC key registers must be written explicitly, as the core does not pad the HMAC key. Additionally, if the HMAC key is larger than 512 bits, the host is responsible for performing a preprocessing step to reduce it to one 512-bit block. This involves hashing the large key and padding the hash result with zeroes until it is 512 bits wide.

The (intermediate) result digest or MAC value can be read from these registers when the status register indicates that the operation is done, or suspended due to a context switch request (reading at other times results in all zeroes being returned). The MD5 result is available from digest registers A-D, the SHA-1 result from registers A-E, the SHA-224 final result from registers A-G, and the SHA-2 intermediate and SHA-256 final result from registers A-H.

The order of the bytes within the digest can be fed back unmodified into the little-endian data input when preprocessing HMAC keys larger than 64 bytes; or it can typically be inserted unmodified into a little-endian data stream (such as IPSEC packets), regardless of the selected algorithm.

The HMAC key itself cannot be read back from these registers, but is preserved for future processing as long as the SHAMD5_ODIGEST registers are not overwritten; this allows reuse of the HMAC key (without having to redo the HMAC key processing) for subsequent data blocks without having to reload it. This is done by setting HMAC key processing to 0 and Reuse HMAC key to 1 in the SHAMD5_MODE register.

Copyright © 2017, Texas Instruments Incorporated

19.2.9 SHAMD5_IDIGEST_A Register (Offset = 20h) [reset = 0h]

SHAMD5_IDIGEST_A is shown in Figure 19-13 and described in Table 19-20.

Return to Summary Table.

WRITE: Inner / Initial Digest [127:96] for MD5 [159:128] for SHA-1, [255:224] for SHA-2 / HMAC Key [287:256] for HMAC key proc

READ: Intermediate / Inner Digest [127:96] for MD5 [159:128] for SHA-1, [255:224] for SHA-2 /

Result Digest/MAC [127:96] for MD5 [159:128] for SHA-1, [223:192] for SHA-2 224, [255:224] for SHA-2 256

Figure 19-13. SHAMD5_IDIGEST_A Register

31	30	29	28	27	26	25	24	23	22	21	20	19	18	17	16	15	14	13	12	11	10	9	8	7	6	5	4	3	2	1	0
DATA																															
R/W-0h																															

LEGEND: R/W = Read/Write; R = Read only; W1toCl = Write 1 to clear bit; *-n* = value after reset

Table 19-20. SHAMD5_IDIGEST_A Register Field Descriptions

Bit	Field	Type	Reset	Description
31-0	DATA	R/W	0h	Data

Copyright © 2017, Texas Instruments Incorporated

19.2.10 SHAMD5_IDIGEST_B Register (Offset = 24h) [reset = 0h]

SHAMD5_IDIGEST_B is shown in Figure 19-14 and described in Table 19-21.

Return to Summary Table.

WRITE: Inner / Initial Digest [95:64] for MD5 [127:96] for SHA-1, [223:192] for SHA-2 / HMAC Key [319:288] for HMAC key proc

READ: Intermediate / Inner Digest [95:64] for MD5 [127:96] for SHA-1, [223:192] for SHA-2 /

Result Digest/MAC [95:64] for MD5 [127:96] for SHA-1, [191:160] for SHA-2 224, [223:192] for SHA-2 256

Figure 19-14. SHAMD5_IDIGEST_B Register

31	30	29	28	27	26	25	24	23	22	21	20	19	18	17	16	15	14	13	12	11	10	9	8	7	6	5	4	3	2	1	0
DATA																															
R/W-0h																															

LEGEND: R/W = Read/Write; R = Read only; W1toCl = Write 1 to clear bit; -*n* = value after reset

Table 19-21. SHAMD5_IDIGEST_B Register Field Descriptions

Bit	Field	Type	Reset	Description
31-0	DATA	R/W	0h	Data

Copyright © 2017, Texas Instruments Incorporated

19.2.11 SHAMD5_IDIGEST_C Register (Offset = 28h) [reset = 0h]

SHAMD5_IDIGEST_C is shown in Figure 19-15 and described in Table 19-22.

Return to Summary Table.

WRITE: Inner / Initial Digest [63:32] for MD5 [95:64] for SHA-1, [191:160] for SHA- 2 / HMAC Key [351:320] for HMAC key proc

READ: Intermediate / Inner Digest [63:32] for MD5 [95:64] for SHA-1, [191:160] for SHA-2 /

Result Digest/MAC [63:32] for MD5 [95:64] for SHA-1, [159:128] for SHA-2 224, [191:160] for SHA-2 256

Figure 19-15. SHAMD5_IDIGEST_C Register

31	30	29	28	27	26	25	24	23	22	21	20	19	18	17	16	15	14	13	12	11	10	9	8	7	6	5	4	3	2	1	0
DATA																															
R/W-0h																															

LEGEND: R/W = Read/Write; R = Read only; W1toCl = Write 1 to clear bit; -*n* = value after reset

Table 19-22. SHAMD5_IDIGEST_C Register Field Descriptions

Bit	Field	Type	Reset	Description
31-0	DATA	R/W	0h	Data

Copyright © 2017, Texas Instruments Incorporated

19.2.12 SHAMD5_IDIGEST_D Register (Offset = 2Ch) [reset = 0h]

SHAMD5_IDIGEST_D is shown in Figure 19-16 and described in Table 19-23.

Return to Summary Table.

WRITE: Inner / Initial Digest [31:0] for MD5 [63:32] for SHA-1, [159:128] for SHA-2 / HMAC Key [383:352] for HMAC key proc

READ: Intermediate / Inner Digest [31:0] for MD5 [63:32] for SHA-1, [159:128] for SHA-2 /

Result Digest/MAC [31:0] for MD5 [63:32] for SHA-1, [127:96] for SHA-2 224, [159:128] for SHA-2 256

Figure 19-16. SHAMD5_IDIGEST_D Register

31	30	29	28	27	26	25	24	23	22	21	20	19	18	17	16	15	14	13	12	11	10	9	8	7	6	5	4	3	2	1	0
DATA																															
R/W-0h																															

LEGEND: R/W = Read/Write; R = Read only; W1toCl = Write 1 to clear bit; -*n* = value after reset

Table 19-23. SHAMD5_IDIGEST_D Register Field Descriptions

Bit	Field	Type	Reset	Description
31-0	DATA	R/W	0h	Data

Copyright © 2017, Texas Instruments Incorporated

19.2.13 SHAMD5_IDIGEST_E Register (Offset = 30h) [reset = 0h]

SHAMD5_IDIGEST_E is shown in Figure 19-17 and described in Table 19-24.

Return to Summary Table.

WRITE: Inner / Initial Digest [31:0] for SHA-1, [127:96] for SHA-2 / HMAC Key [415:384] for HMAC key proc

READ: Intermediate / Inner Digest [31:0] for SHA-1, [127:96] for SHA-2 /

Result Digest/MAC [31:0] for SHA-1, [95:64] for SHA-2 224, [127:96] for SHA-2 256

Figure 19-17. SHAMD5_IDIGEST_E Register

31	30	29	28	27	26	25	24	23	22	21	20	19	18	17	16	15	14	13	12	11	10	9	8	7	6	5	4	3	2	1	0
DATA																															
R/W-0h																															

LEGEND: R/W = Read/Write; R = Read only; W1toCl = Write 1 to clear bit; -*n* = value after reset

Table 19-24. SHAMD5_IDIGEST_E Register Field Descriptions

Bit	Field	Type	Reset	Description
31-0	DATA	R/W	0h	Data

Copyright © 2017, Texas Instruments Incorporated

19.2.14 SHAMD5_IDIGEST_F Register (Offset = 34h) [reset = 0h]

SHAMD5_IDIGEST_F is shown in Figure 19-18 and described in Table 19-25.

Return to Summary Table.

WRITE: Inner / Initial Digest [95:64] for SHA-2 / HMAC Key [447:416] for HMAC key proc

READ: Intermediate / Inner Digest [95:64] for SHA-2 /

Result Digest/MAC [63:32] for SHA-2 224, [95:64] for SHA-2 256

Figure 19-18. SHAMD5_IDIGEST_F Register

31	30	29	28	27	26	25	24	23	22	21	20	19	18	17	16	15	14	13	12	11	10	9	8	7	6	5	4	3	2	1	0
DATA																															
R/W-0h																															

LEGEND: R/W = Read/Write; R = Read only; W1toCl = Write 1 to clear bit; *-n* = value after reset

Table 19-25. SHAMD5_IDIGEST_F Register Field Descriptions

Bit	Field	Type	Reset	Description
31-0	DATA	R/W	0h	Data

Copyright © 2017, Texas Instruments Incorporated

19.2.15 SHAMD5_IDIGEST_G Register (Offset = 38h) [reset = 0h]

SHAMD5_IDIGEST_G is shown in Figure 19-19 and described in Table 19-26.

Return to Summary Table.

WRITE: Inner / Initial Digest [63:32] for SHA-2 / HMAC Key [479:448] for HMAC key proc

READ: Intermediate / Inner Digest [63:32] for SHA-2 /

Result Digest/MAC [31:0] for SHA-2 224, [63:32] for SHA-2 256

Figure 19-19. SHAMD5_IDIGEST_G Register

31	30	29	28	27	26	25	24	23	22	21	20	19	18	17	16	15	14	13	12	11	10	9	8	7	6	5	4	3	2	1	0
DATA																															
R/W-0h																															

LEGEND: R/W = Read/Write; R = Read only; W1toCl = Write 1 to clear bit; *-n* = value after reset

Table 19-26. SHAMD5_IDIGEST_G Register Field Descriptions

Bit	Field	Type	Reset	Description
31-0	DATA	R/W	0h	Data

Copyright © 2017, Texas Instruments Incorporated

19.2.16 SHAMD5_IDIGEST_H Register (Offset = 3Ch) [reset = 0h]

SHAMD5_IDIGEST_H is shown in Figure 19-20 and described in Table 19-27.

Return to Summary Table.

WRITE: Inner / Initial Digest [31:0] for SHA-2 / HMAC Key [511:480] for HMAC key proc

READ: Intermediate / Inner Digest [31:0] for SHA-2 /

Result Digest/MAC [31:0] for SHA-2 256

Figure 19-20. SHAMD5_IDIGEST_H Register

31	30	29	28	27	26	25	24	23	22	21	20	19	18	17	16	15	14	13	12	11	10	9	8	7	6	5	4	3	2	1	0
DATA																															
R/W-0h																															

LEGEND: R/W = Read/Write; R = Read only; W1toCl = Write 1 to clear bit; *-n* = value after reset

Table 19-27. SHAMD5_IDIGEST_H Register Field Descriptions

Bit	Field	Type	Reset	Description
31-0	DATA	R/W	0h	Data

Copyright © 2017, Texas Instruments Incorporated

19.2.17 SHAMD5_DIGEST_COUNT Register (Offset = 40h) [reset = 0h]

SHAMD5_DIGEST_COUNT is shown in Figure 19-21 and described in Table 19-28.

Return to Summary Table.

WRITE: Initial Digest Count ([31:6] only, [5:0] assumed 0)

READ: Result / IntermediateDigest Count

The initial digest byte count for hash/HMAC continue operations (HMAC key processing = 0 and use algorithm constants = 0) on the secure world must be written to this register prior to starting the operation by writing to S_HASH_MODE. When either HMAC key processing is 1 or use algorithm constants is 1, this register does not need to be written, it is overwritten with 64 (1 hash block of key XOR ipad) or 0 respectively, automatically.

When starting an HMAC operation from pre-computes (HMAC key processing is 0), the value 64 must be written here to compensate for the appended key XOR ipad block. The value written should always be a 64 byte multiple; the lower 6 bits written are ignored.

The updated digest byte count (initial digest byte count plus bytes processed) can be read from this register when the status register indicates that the operation is done or suspended due to a context switch request, or when a secure world context out DMA is requested.

Figure 19-21. SHAMD5_DIGEST_COUNT Register

31	30	29	28	27	26	25	24	23	22	21	20	19	18	17	16	15	14	13	12	11	10	9	8	7	6	5	4	3	2	1	0
DATA																															
R/W-0h																															

LEGEND: R/W = Read/Write; R = Read only; W1toCl = Write 1 to clear bit; *-n* = value after reset

Table 19-28. SHAMD5_DIGEST_COUNT Register Field Descriptions

Bit	Field	Type	Reset	Description
31-0	DATA	R/W	0h	Data

Copyright © 2017, Texas Instruments Incorporated

19.2.18 SHAMD5_MODE Register (Offset = 44h) [reset = X]

SHAMD5_MODE is shown in Figure 19-22 and described in Table 19-29.

Return to Summary Table.

Figure 19-22. SHAMD5_MODE Register

31	30	29	28	27	26	25	24
RESERVED							
R-X							
23	22	21	20	19	18	17	16
RESERVED							
R-X							
15	14	13	12	11	10	9	8
RESERVED							
R-X							
7	6	5	4	3	2	1	0
HMAC_OUTER_HASH	RESERVED	HMAC_KEY_PROC	CLOSE_HASH	ALGO_CONSTANT	ALGO		RESERVED
R/W-0h	R-X	R/W-0h	R/W-0h	R/W-0h	R/W-0h		R-X

LEGEND: R/W = Read/Write; R = Read only; W1toCl = Write 1 to clear bit; *-n* = value after reset

Table 19-29. SHAMD5_MODE Register Field Descriptions

Bit	Field	Type	Reset	Description
31-8	RESERVED	R	X	
7	HMAC_OUTER_HASH	R/W	0h	The HMAC outer hash is performed on the hash digest when the inner hash has finished (block length exhausted and final hash performed if close_hash is 1). This bit should normally be set together with close_hash to finish the inner hash first, or block length should be zero (HMAC continues with the just outer hash to be done). Auto-cleared internally when outer hash performed. 0h = No operation 1h = HMAC processing
6	RESERVED	R	X	
5	HMAC_KEY_PROC	R/W	0h	Performs HMAC key processing on the 512-bit HMAC key loaded into the SHAMD5_IDIGEST_{A to H} and SHAMD5_ODIGEST_{A to H} register block. When HMAC key processing is finished, this bit is automatically cleared, and the resulting inner and outer digest is available from SHAMD5_IDIGEST_{A to H} and SHAMD5_ODIGEST_{A to H} respectively, after which regular hash processing (using SHAMD5_IDIGEST_{A to H} as initial digest) commences, until the block length is exhausted. 0h = No operation 1h = HMAC processing
4	CLOSE_HASH	R/W	0h	Performs the padding; the hash/HMAC is closed at the end of the block, as per MD5/SHA-1/SHA-2 specification (that is, appropriate padding is added), or no padding is done, allowing the hash to be continued later. However, if the hash/HMAC is not closed, the block length must be a multiple of 64 bytes to ensure correct operation. Auto-cleared internally when hash closed. 0h = No padding, hash computation can be continued. 1h = Last packet is padded.

Copyright © 2017, Texas Instruments Incorporated

Table 19-29. SHAMD5_MODE Register Field Descriptions (continued)

Bit	Field	Type	Reset	Description
3	ALGO_CONSTANT	R/W	0h	The initial digest register is overwritten with the algorithm constants for the selected algorithm when hashing, and the initial digest count register is reset to 0. This starts a normal hash operation. When continuing an existing hash or when performing an HMAC operation, this register must be set to 0 and the intermediate/inner digest or HMAC key and digest count must be written to the context input registers prior to writing SHAMD5_MODE. Auto-cleared internally after first block processed. 0h = Use pre-calculated digest (from another operation) 1h = Use constants of the selected algo.
2-1	ALGO	R/W	0h	These bits select the hash algorithm to be used for processing. 0h = md5_128 algorithm 1h = sha1_160 algorithm 2h = sha2_224 algorithm 3h = sha2_256 algorithm
0	RESERVED	R	X	

Copyright © 2017, Texas Instruments Incorporated

19.2.19 SHAMD5_LENGTH Register (Offset = 48h) [reset = 0h]

SHAMD5_LENGTH is shown in Figure 19-23 and described in Table 19-30.

Return to Summary Table.

WRITE: Block length / remaining byte count (bytes)

READ: Remaining byte count.

The value programmed must be a 64-byte multiple if close hash is set to 0. This register is also the trigger to start processing: once this register is written, the core commences requesting input data through DMA or IRQ (if programmed length > 0) and start processing.

The remaining byte count for the active operation can be read from this register when the interrupt status register indicates that the operation is suspended due to a context switch request.

Figure 19-23. SHAMD5_LENGTH Register

31	30	29	28	27	26	25	24	23	22	21	20	19	18	17	16	15	14	13	12	11	10	9	8	7	6	5	4	3	2	1	0
DATA																															
R/W-0h																															

LEGEND: R/W = Read/Write; R = Read only; W1toCl = Write 1 to clear bit; *-n* = value after reset

Table 19-30. SHAMD5_LENGTH Register Field Descriptions

Bit	Field	Type	Reset	Description
31-0	DATA	R/W	0h	Data

Hash Input Data Registers: The following are input data registers for the Hash/HMAC engine:

- SHAMD5_DATA0_IN
- SHAMD5_DATA1_IN
- SHAMD5_DATA2_IN
- SHAMD5_DATA3_IN
- SHAMD5_DATA4_IN
- SHAMD5_DATA5_IN
- SHAMD5_DATA6_IN
- SHAMD5_DATA7_IN
- SHAMD5_DATA8_IN
- SHAMD5_DATA9_IN
- SHAMD5_DATA10_IN
- SHAMD5_DATA11_IN
- SHAMD5_DATA12_IN
- SHAMD5_DATA13_IN
- SHAMD5_DATA14_IN
- SHAMD5_DATA15_IN

Writing 4-byte words to a word-aligned offset within this address range pushes the data into the 32-word deep (128 bytes = 1024 bits for one SHA-384/512 hash block) data-input FIFO. Although the actual address used within the range is not important, the order of the data words is. Also, do not exceed the FIFO size: check the status signals after writing a full block of 16 words or 32 words for SHA-384 and SHA-512.

Copyright © 2017, Texas Instruments Incorporated

This FIFO must be filled with 16 or 32 words (one full hash block) before the core can start processing the next block, except for the last hash block when close hash is set to 1. In this particular case, as many words need to be written as necessary to get the remaining bytes into the core. If the last word ends misaligned (the last word contains one or more invalid bytes) these bytes are ignored by the hash/HMAC engine. If a host writes additional words beyond the last hash data word of the current hash operation, the hash/HMAC engine ignores these additional words. Therefore, once the hash length decrements to zero, additional write to the data input FIFO are ignored. A new write to the length register allows the hash/HMAC engine to accept new data for storing into the data input FIFO.

A read from these registers (on any address in the address range) returns zeros.

Copyright © 2017, Texas Instruments Incorporated

19.2.20 SHAMD5_DATA0_IN Register (Offset = 80h) [reset = 0h]

SHAMD5_DATA0_IN is shown in Figure 19-24 and described in Table 19-31.

Return to Summary Table.

Data input message 0

Figure 19-24. SHAMD5_DATA0_IN Register

31	30	29	28	27	26	25	24	23	22	21	20	19	18	17	16	15	14	13	12	11	10	9	8	7	6	5	4	3	2	1	0
DATA0_IN																															
R/W-0h																															

LEGEND: R/W = Read/Write; R = Read only; W1toCl = Write 1 to clear bit; *-n* = value after reset

Table 19-31. SHAMD5_DATA0_IN Register Field Descriptions

Bit	Field	Type	Reset	Description
31-0	DATA0_IN	R/W	0h	Data

Copyright © 2017, Texas Instruments Incorporated

19.2.21 SHAMD5_DATA1_IN Register (Offset = 84h) [reset = 0h]

SHAMD5_DATA1_IN is shown in Figure 19-25 and described in Table 19-32.

Return to Summary Table.

Data input message 1

Figure 19-25. SHAMD5_DATA1_IN Register

31	30	29	28	27	26	25	24	23	22	21	20	19	18	17	16	15	14	13	12	11	10	9	8	7	6	5	4	3	2	1	0
DATA1_IN																															
R/W-0h																															

LEGEND: R/W = Read/Write; R = Read only; W1toCl = Write 1 to clear bit; *-n* = value after reset

Table 19-32. SHAMD5_DATA1_IN Register Field Descriptions

Bit	Field	Type	Reset	Description
31-0	DATA1_IN	R/W	0h	Data

Copyright © 2017, Texas Instruments Incorporated

19.2.22 SHAMD5_DATA2_IN Register (Offset = 88h) [reset = 0h]

SHAMD5_DATA2_IN is shown in Figure 19-26 and described in Table 19-33.

Return to Summary Table.

Data input message 2

Figure 19-26. SHAMD5_DATA2_IN Register

31	30	29	28	27	26	25	24	23	22	21	20	19	18	17	16	15	14	13	12	11	10	9	8	7	6	5	4	3	2	1	0
DATA2_IN																															
R/W-0h																															

LEGEND: R/W = Read/Write; R = Read only; W1toCl = Write 1 to clear bit; *-n* = value after reset

Table 19-33. SHAMD5_DATA2_IN Register Field Descriptions

Bit	Field	Type	Reset	Description
31-0	DATA2_IN	R/W	0h	Data

Copyright © 2017, Texas Instruments Incorporated

19.2.23 SHAMD5_DATA3_IN Register (Offset = 8Ch) [reset = 0h]

SHAMD5_DATA3_IN is shown in Figure 19-27 and described in Table 19-34.

Return to Summary Table.

Data input message 3

Figure 19-27. SHAMD5_DATA3_IN Register

31	30	29	28	27	26	25	24	23	22	21	20	19	18	17	16	15	14	13	12	11	10	9	8	7	6	5	4	3	2	1	0
DATA3_IN																															
R/W-0h																															

LEGEND: R/W = Read/Write; R = Read only; W1toCl = Write 1 to clear bit; *-n* = value after reset

Table 19-34. SHAMD5_DATA3_IN Register Field Descriptions

Bit	Field	Type	Reset	Description
31-0	DATA3_IN	R/W	0h	Data

Copyright © 2017, Texas Instruments Incorporated

19.2.24 SHAMD5_DATA4_IN Register (Offset = 90h) [reset = 0h]

SHAMD5_DATA4_IN is shown in Figure 19-28 and described in Table 19-35.

Return to Summary Table.

Data input message 4

Figure 19-28. SHAMD5_DATA4_IN Register

31	30	29	28	27	26	25	24	23	22	21	20	19	18	17	16	15	14	13	12	11	10	9	8	7	6	5	4	3	2	1	0
DATA4_IN																															
R/W-0h																															

LEGEND: R/W = Read/Write; R = Read only; W1toCl = Write 1 to clear bit; *-n* = value after reset

Table 19-35. SHAMD5_DATA4_IN Register Field Descriptions

Bit	Field	Type	Reset	Description
31-0	DATA4_IN	R/W	0h	Data

Copyright © 2017, Texas Instruments Incorporated

19.2.25 SHAMD5_DATA5_IN Register (Offset = 94h) [reset = 0h]

SHAMD5_DATA5_IN is shown in Figure 19-29 and described in Table 19-36.

Return to Summary Table.

Data input message 5

Figure 19-29. SHAMD5_DATA5_IN Register

31	30	29	28	27	26	25	24	23	22	21	20	19	18	17	16	15	14	13	12	11	10	9	8	7	6	5	4	3	2	1	0
DATA5_IN																															
R/W-0h																															

LEGEND: R/W = Read/Write; R = Read only; W1toCl = Write 1 to clear bit; *-n* = value after reset

Table 19-36. SHAMD5_DATA5_IN Register Field Descriptions

Bit	Field	Type	Reset	Description
31-0	DATA5_IN	R/W	0h	Data

Copyright © 2017, Texas Instruments Incorporated

19.2.26 SHAMD5_DATA6_IN Register (Offset = 98h) [reset = 0h]

SHAMD5_DATA6_IN is shown in Figure 19-30 and described in Table 19-37.

Return to Summary Table.

Data input message 6

Figure 19-30. SHAMD5_DATA6_IN Register

31	30	29	28	27	26	25	24	23	22	21	20	19	18	17	16	15	14	13	12	11	10	9	8	7	6	5	4	3	2	1	0
DATA6_IN																															
R/W-0h																															

LEGEND: R/W = Read/Write; R = Read only; W1toCl = Write 1 to clear bit; *-n* = value after reset

Table 19-37. SHAMD5_DATA6_IN Register Field Descriptions

Bit	Field	Type	Reset	Description
31-0	DATA6_IN	R/W	0h	Data

Copyright © 2017, Texas Instruments Incorporated

19.2.27 SHAMD5_DATA7_IN Register (Offset = 9Ch) [reset = 0h]

SHAMD5_DATA7_IN is shown in Figure 19-31 and described in Table 19-38.

Return to Summary Table.

Data input message 7

Figure 19-31. SHAMD5_DATA7_IN Register

31	30	29	28	27	26	25	24	23	22	21	20	19	18	17	16	15	14	13	12	11	10	9	8	7	6	5	4	3	2	1	0
DATA7_IN																															
R/W-0h																															

LEGEND: R/W = Read/Write; R = Read only; W1toCl = Write 1 to clear bit; *-n* = value after reset

Table 19-38. SHAMD5_DATA7_IN Register Field Descriptions

Bit	Field	Type	Reset	Description
31-0	DATA7_IN	R/W	0h	Data

Copyright © 2017, Texas Instruments Incorporated

19.2.28 SHAMD5_DATA8_IN Register (Offset = A0h) [reset = 0h]

SHAMD5_DATA8_IN is shown in Figure 19-32 and described in Table 19-39.

Return to Summary Table.

Data input message 8

Figure 19-32. SHAMD5_DATA8_IN Register

31	30	29	28	27	26	25	24	23	22	21	20	19	18	17	16	15	14	13	12	11	10	9	8	7	6	5	4	3	2	1	0
DATA8_IN																															
R/W-0h																															

LEGEND: R/W = Read/Write; R = Read only; W1toCl = Write 1 to clear bit; *-n* = value after reset

Table 19-39. SHAMD5_DATA8_IN Register Field Descriptions

Bit	Field	Type	Reset	Description
31-0	DATA8_IN	R/W	0h	Data

Copyright © 2017, Texas Instruments Incorporated

19.2.29 SHAMD5_DATA9_IN Register (Offset = A4h) [reset = 0h]

SHAMD5_DATA9_IN is shown in Figure 19-33 and described in Table 19-40.

Return to Summary Table.

Data input message 9

Figure 19-33. SHAMD5_DATA9_IN Register

31	30	29	28	27	26	25	24	23	22	21	20	19	18	17	16	15	14	13	12	11	10	9	8	7	6	5	4	3	2	1	0
DATA9_IN																															
R/W-0h																															

LEGEND: R/W = Read/Write; R = Read only; W1toCl = Write 1 to clear bit; *-n* = value after reset

Table 19-40. SHAMD5_DATA9_IN Register Field Descriptions

Bit	Field	Type	Reset	Description
31-0	DATA9_IN	R/W	0h	Data

Copyright © 2017, Texas Instruments Incorporated

19.2.30 SHAMD5_DATA10_IN Register (Offset = A8h) [reset = 0h]

SHAMD5_DATA10_IN is shown in Figure 19-34 and described in Table 19-41.

Return to Summary Table.

Data input message 10

Figure 19-34. SHAMD5_DATA10_IN Register

31	30	29	28	27	26	25	24	23	22	21	20	19	18	17	16	15	14	13	12	11	10	9	8	7	6	5	4	3	2	1	0
DATA10_IN																															
R/W-0h																															

LEGEND: R/W = Read/Write; R = Read only; W1toCl = Write 1 to clear bit; *-n* = value after reset

Table 19-41. SHAMD5_DATA10_IN Register Field Descriptions

Bit	Field	Type	Reset	Description
31-0	DATA10_IN	R/W	0h	Data

Copyright © 2017, Texas Instruments Incorporated

19.2.31 SHAMD5_DATA11_IN Register (Offset = ACh) [reset = 0h]

SHAMD5_DATA11_IN is shown in Figure 19-35 and described in Table 19-42.

Return to Summary Table.

Data input message 11

Figure 19-35. SHAMD5_DATA11_IN Register

31	30	29	28	27	26	25	24	23	22	21	20	19	18	17	16	15	14	13	12	11	10	9	8	7	6	5	4	3	2	1	0
DATA11_IN																															
R/W-0h																															

LEGEND: R/W = Read/Write; R = Read only; W1toCl = Write 1 to clear bit; *-n* = value after reset

Table 19-42. SHAMD5_DATA11_IN Register Field Descriptions

Bit	Field	Type	Reset	Description
31-0	DATA11_IN	R/W	0h	Data

Copyright © 2017, Texas Instruments Incorporated

19.2.32 SHAMD5_DATA12_IN Register (Offset = B0h) [reset = 0h]

SHAMD5_DATA12_IN is shown in Figure 19-36 and described in Table 19-43.

Return to Summary Table.

Data input message 12

Figure 19-36. SHAMD5_DATA12_IN Register

31	30	29	28	27	26	25	24	23	22	21	20	19	18	17	16	15	14	13	12	11	10	9	8	7	6	5	4	3	2	1	0
DATA12_IN																															
R/W-0h																															

LEGEND: R/W = Read/Write; R = Read only; W1toCl = Write 1 to clear bit; *-n* = value after reset

Table 19-43. SHAMD5_DATA12_IN Register Field Descriptions

Bit	Field	Type	Reset	Description
31-0	DATA12_IN	R/W	0h	Data

Copyright © 2017, Texas Instruments Incorporated

19.2.33 SHAMD5_DATA13_IN Register (Offset = B4h) [reset = 0h]

SHAMD5_DATA13_IN is shown in Figure 19-37 and described in Table 19-44.

Return to Summary Table.

Data input message 13

Figure 19-37. SHAMD5_DATA13_IN Register

31	30	29	28	27	26	25	24	23	22	21	20	19	18	17	16	15	14	13	12	11	10	9	8	7	6	5	4	3	2	1	0
DATA13_IN																															
R/W-0h																															

LEGEND: R/W = Read/Write; R = Read only; W1toCl = Write 1 to clear bit; *-n* = value after reset

Table 19-44. SHAMD5_DATA13_IN Register Field Descriptions

Bit	Field	Type	Reset	Description
31-0	DATA13_IN	R/W	0h	Data

Copyright © 2017, Texas Instruments Incorporated

19.2.34 SHAMD5_DATA14_IN Register (Offset = B8h) [reset = 0h]

SHAMD5_DATA14_IN is shown in Figure 19-38 and described in Table 19-45.

Return to Summary Table.

Data input message 14

Figure 19-38. SHAMD5_DATA14_IN Register

31	30	29	28	27	26	25	24	23	22	21	20	19	18	17	16	15	14	13	12	11	10	9	8	7	6	5	4	3	2	1	0
DATA14_IN																															
R/W-0h																															

LEGEND: R/W = Read/Write; R = Read only; W1toCl = Write 1 to clear bit; *-n* = value after reset

Table 19-45. SHAMD5_DATA14_IN Register Field Descriptions

Bit	Field	Type	Reset	Description
31-0	DATA14_IN	R/W	0h	Data

Copyright © 2017, Texas Instruments Incorporated

19.2.35 SHAMD5_DATA15_IN Register (Offset = BCh) [reset = 0h]

SHAMD5_DATA15_IN is shown in Figure 19-39 and described in Table 19-46.

Return to Summary Table.

Data input message 15

Figure 19-39. SHAMD5_DATA15_IN Register

31	30	29	28	27	26	25	24	23	22	21	20	19	18	17	16	15	14	13	12	11	10	9	8	7	6	5	4	3	2	1	0
DATA15_IN																															
R/W-0h																															

LEGEND: R/W = Read/Write; R = Read only; W1toCl = Write 1 to clear bit; *-n* = value after reset

Table 19-46. SHAMD5_DATA15_IN Register Field Descriptions

Bit	Field	Type	Reset	Description
31-0	DATA15_IN	R/W	0h	Data

Copyright © 2017, Texas Instruments Incorporated

19.2.36 SHAMD5_SYSCONFIG Register (Offset = 110h) [reset = X]

SHAMD5_SYSCONFIG is shown in Figure 19-40 and described in Table 19-47.

Return to Summary Table.

Figure 19-40. SHAMD5_SYSCONFIG Register

31	30	29	28	27	26	25	24
RESERVED							
R-X							
23	22	21	20	19	18	17	16
RESERVED							
R-X							
15	14	13	12	11	10	9	8
RESERVED							
R-X							
7	6	5	4	3	2	1	0
RESERVED	PCONT_SWT	RESERVED		PDMA_EN	PIT_EN	RESERVED	
R-X	R/W-0h	R-X		R/W-0h	R/W-0h	R-X	

LEGEND: R/W = Read/Write; R = Read only; W1toCl = Write 1 to clear bit; *-n* = value after reset

Table 19-47. SHAMD5_SYSCONFIG Register Field Descriptions

Bit	Field	Type	Reset	Description
31-7	RESERVED	R	X	
6	PCONT_SWT	R/W	0h	Finishes all pending data and context DMA input requests (but will not assert any new requests), finishes processing all data in the module, and provides a saved context (partial hash result, updated digest count, remaining length, updated mode information where applicable) for the last operation that was interrupted, so that it can be resumed later.
5-4	RESERVED	R	X	
3	PDMA_EN	R/W	0h	Enable DMA 0h = DMA disabled 1h = DMA enabled
2	PIT_EN	R/W	0h	Enable Interrupt 0h = Interrupt disabled 1h = Interrupt enabled
1-0	RESERVED	R	X	

Copyright © 2017, Texas Instruments Incorporated

19.2.37 SHAMD5_IRQSTATUS Register (Offset = 118h) [reset = X]

SHAMD5_IRQSTATUS is shown in Figure 19-41 and described in Table 19-48.

Return to Summary Table.

Figure 19-41. SHAMD5_IRQSTATUS Register

31	30	29	28	27	26	25	24
RESERVED							
R-X							
23	22	21	20	19	18	17	16
RESERVED							
R-X							
15	14	13	12	11	10	9	8
RESERVED							
R-X							
7	6	5	4	3	2	1	0
RESERVED				CONTEXT_READY	PARTHASH_READY	INPUT_READY	OUTPUT_READY
R-X				RO-1h	RO-0h	RO-0h	RO-0h

LEGEND: R/W = Read/Write; R = Read only; W1toCl = Write 1 to clear bit; *-n* = value after reset

Table 19-48. SHAMD5_IRQSTATUS Register Field Descriptions

Bit	Field	Type	Reset	Description
31-4	RESERVED	R	X	
3	CONTEXT_READY	RO	1h	Indicates that the secure-side context input registers are available for a new context for the next packet to be processed.
2	PARTHASH_READY	RO	0h	After a secure-side context switch request, this bit reads as 1, indicating that the saved context is available from the secure-side context output registers. If the context switch request coincides with a final hash (when hashing) or an outer hash (when doing HMAC), that PartHashReady will not become active, but a regular output ready occurs instead (indicating that the result is final and therefore no continuation is required).
1	INPUT_READY	RO	0h	Indicates that the secure-side data FIFO is ready to receive the next 64-byte data block.
0	OUTPUT_READY	RO	0h	Indicates that a (partial) result or saved context is available from the secure-side context output registers.

Copyright © 2017, Texas Instruments Incorporated

19.2.38 SHAMD5_IRQENABLE Register (Offset = 11Ch) [reset = X]

SHAMD5_IRQENABLE is shown in Figure 19-42 and described in Table 19-49.

Return to Summary Table.

The SHAMD5_IRQENABLE register contains an enable bit for each unique interrupt for the public side. An interrupt is enabled when both the global enable in SHAMD5_SYSCONFIG (PIT_en) and the bit in this register are both set to 1. An interrupt that is enabled is propagated to the SINTREQUEST_P output. The dedicated partial hash output (SINTREQUEST_PART_P) is not affected by this register, it is only affected by the global enable SHAMD5_SYSCONFIG (PIT_en).

Figure 19-42. SHAMD5_IRQENABLE Register

31	30	29	28	27	26	25	24
RESERVED							
R-X							
23	22	21	20	19	18	17	16
RESERVED							
R-X							
15	14	13	12	11	10	9	8
RESERVED							
R-X							
7	6	5	4	3	2	1	0
RESERVED				M_CONTEXT_READY	M_PARTHASH_READY	M_INPUT_READY	M_OUTPUT_READY
R-X				R/W-0h	R/W-0h	R/W-0h	R/W-0h

LEGEND: R/W = Read/Write; R = Read only; W1toCl = Write 1 to clear bit; *-n* = value after reset

Table 19-49. SHAMD5_IRQENABLE Register Field Descriptions

Bit	Field	Type	Reset	Description
31-4	RESERVED	R	X	
3	M_CONTEXT_READY	R/W	0h	Mask for context ready
2	M_PARTHASH_READY	R/W	0h	Mask for partial hash
1	M_INPUT_READY	R/W	0h	Mask for input_ready
0	M_OUTPUT_READY	R/W	0h	Mask for output_ready

Copyright © 2017, Texas Instruments Incorporated

19.2.39 DTHE_SHA_IM Register (Offset = 810h) [reset = X]

DTHE_SHA_IM is shown in Figure 19-43 and described in Table 19-50.

Return to Summary Table.

SHA/MD5 interrupt mask set register that allows the control of which interrupt source should interrupt the processor.

Figure 19-43. DTHE_SHA_IM Register

31	30	29	28	27	26	25	24
RESERVED							
R-X							
23	22	21	20	19	18	17	16
RESERVED							
R-X							
15	14	13	12	11	10	9	8
RESERVED							
R-X							
7	6	5	4	3	2	1	0
RESERVED					Din	Cout	Cin
R-X					R/W-1h	R/W-1h	R/W-1h

LEGEND: R/W = Read/Write; R = Read only; W1toCl = Write 1 to clear bit; *-n* = value after reset

Table 19-50. DTHE_SHA_IM Register Field Descriptions

Bit	Field	Type	Reset	Description
31-3	RESERVED	R	X	
2	Din	R/W	1h	Data in: this interrupt is raised when DMA writes last word of input data to internal FIFO of the engine.
1	Cout	R/W	1h	Context out: this interrupt is raised when DMA completes the output context movement from internal register.
0	Cin	R/W	1h	Context in: this interrupt is raised when DMA completes a context write to internal register

Copyright © 2017, Texas Instruments Incorporated

19.2.40 DTHE_SHA_RIS Register (Offset = 814h) [reset = X]

DTHE_SHA_RIS is shown in Figure 19-44 and described in Table 19-51.

Return to Summary Table.

SHAMD5 raw interrupt status register

Figure 19-44. DTHE_SHA_RIS Register

31	30	29	28	27	26	25	24
RESERVED							
R-X							
23	22	21	20	19	18	17	16
RESERVED							
R-X							
15	14	13	12	11	10	9	8
RESERVED							
R-X							
7	6	5	4	3	2	1	0
RESERVED					Din	Cout	Cin
R-X					R-0h	R-0h	R-0h

LEGEND: R/W = Read/Write; R = Read only; W1toCl = Write 1 to clear bit; *-n* = value after reset

Table 19-51. DTHE_SHA_RIS Register Field Descriptions

Bit	Field	Type	Reset	Description
31-3	RESERVED	R	X	
2	Din	R	0h	Input data movement is done
1	Cout	R	0h	Context output is done
0	Cin	R	0h	Context input is done

Copyright © 2017, Texas Instruments Incorporated

19.2.41 DTHE_SHA_MIS Register (Offset = 818h) [reset = X]

DTHE_SHA_MIS is shown in Figure 19-45 and described in Table 19-52.

Return to Summary Table.

SHAMD5 masked interrupt status register.

Figure 19-45. DTHE_SHA_MIS Register

31	30	29	28	27	26	25	24
RESERVED							
R-X							
23	22	21	20	19	18	17	16
RESERVED							
R-X							
15	14	13	12	11	10	9	8
RESERVED							
R-X							
7	6	5	4	3	2	1	0
RESERVED					Din	Cout	Cin
R-X					R-0h	R-0h	R-0h

LEGEND: R/W = Read/Write; R = Read only; W1toCl = Write 1 to clear bit; *-n* = value after reset

Table 19-52. DTHE_SHA_MIS Register Field Descriptions

Bit	Field	Type	Reset	Description
31-3	RESERVED	R	X	
2	Din	R	0h	Input data movement is done
1	Cout	R	0h	Context output is done
0	Cin	R	0h	Context input is done

Copyright © 2017, Texas Instruments Incorporated

19.2.42 DTHE_SHA_IC Register (Offset = 81Ch) [reset = X]

DTHE_SHA_IC is shown in Figure 19-46 and described in Table 19-53.

Return to Summary Table.

SHAMD5 interrupt acknowledge register. Writing 1 to these bits clear the status flag in RIS and MIS register. Reads are always zero.

Figure 19-46. DTHE_SHA_IC Register

31	30	29	28	27	26	25	24
RESERVED							
R-X							
23	22	21	20	19	18	17	16
RESERVED							
R-X							
15	14	13	12	11	10	9	8
RESERVED							
R-X							
7	6	5	4	3	2	1	0
RESERVED					Din	Cout	Cin
R-X					R/WC-0h	WC-0h	WC-0h

LEGEND: R/W = Read/Write; R = Read only; W1toCl = Write 1 to clear bit; *-n* = value after reset

Table 19-53. DTHE_SHA_IC Register Field Descriptions

Bit	Field	Type	Reset	Description
31-3	RESERVED	R	X	
2	Din	R/WC	0h	Clear “input data movement done” flag
1	Cout	WC	0h	Clear “output done” flag
0	Cin	WC	0h	Clear “input done” flag

Copyright © 2017, Texas Instruments Incorporated

Cyclical Redundancy Check (CRC)

The Cyclical Redundancy Check (CRC) computation module can be used for message transfer and safety system checks, as well as in conjunction with the AES and DES modules. The following features are supported:

- Support four major CRC forms:
  - CRC16-CCITT as used by CCITT/ITU X.25
  - CRC16-IBM as used by USB and ANSI
  - CRC32-IEEE as used by IEEE802.3 and MPEG2
  - CRC32C as used by G.Hn
- Allows word and byte feed
- Supports auto-initialization and manual initialization
- Supports MSb and LSb
- Supports CCITT post-processing

Topic **Page**

20.1 Functional Description **735**
20.2 Initialization and Configuration **736**
20.3 CRC Registers **738**

Copyright © 2017, Texas Instruments Incorporated

20.1 Functional Description

The following sections describe the features of CRC.

20.1.1 CRC Support

The purpose of the CRC engine is to accelerate CRC and TCP checksum operation. The result of the CRC operation is a 32- and 16-bit signature which checks the sanity of data. The required mode of operation is selected through the TYPE bit in the CRC Control (CRCCTRL) register, offset 0xC00.

The CRC module contains all of the control registers to which the input context interfaces. Because CRC calculations are a single cycle, when data is written to the CRC Data Input (CRCDIN) register, the result of CRC/CSUM is updated in the CRC SEED/Context (CRCSEED) register, offset 0xC10. The input data is computed by the selected CRC polynomial or CSUM.

20.1.1.1 CRC Checksum Engine

Software can offload the CRC and checksum task to the CRC checksum engine accelerator. The accelerator has registers that must be programmed to initiate processing. These registers should be fed with data to calculate CRC/CSUM.

The starting seed for the CRC and checksum operation is programmed in the CRC SEED/Context (CRCSEED) register at offset 0xC10. Depending on the encoding of the INIT field in the CRCCTRL register, the value of the SEED field can initialized to any one of the following:

- A unique context value written to the CRCSEED register (INIT=0x0)
- All 0s (INIT=0x2)
- All 1s (INIT=0x3)

Once the operation is complete, software should read the result from the CRC Post Processing Result (CRCRSLTPP) register, offset 0xC18.

20.1.1.2 Data Size

The CRC module supports data being fed 32-bit words and 8 bits at a time, and can dynamically switch back and forth. The data size is configured by programming the SIZE bit in the CRCCTRL register, offset 0xC00.

Because CRC is a division on a long stream of bits, the application must consider the bit order. When processing message data that is read out by words, bit order is not an issue. For example, if the data value in the message is 0x12345678, the most significant eight byte is 0x12 (00010010 in binary). If the data is processed as bytes, 0x12, 0x34, 0x56, and 0x78 are copied into memory in that order and the word is stored as 0x78563412, where 0x12 is written as byte 0, 0x34 is written as byte 1, and so forth.

20.1.1.3 Endian Configuration

The following endian configuration is provided by the ENDIAN field in the CRCCTRL register:

- Swap byte in half-word
- Swap half word

Input data width is four bytes, thus the configuration only affects the four-byte word. The ENDIAN bit field supports the configurations shown in Table 20-1, assuming the input word is {B3, B2, B1, B0}.

Copyright © 2017, Texas Instruments Incorporated

Table 20-1. Endian Configuration

ENDIAN Encoding	Definition	Configuration
0x0	Configuration unchanged.	{B3, B2, B1, B0}
0x1	Bytes are swapped in half-words, but half-words are not swapped	{B2, B3, B0, B1}
0x2	Half-words are swapped, but bytes are not swapped in half-word.	{B1, B0, B3, B2}
0x3	Bytes are swapped in half-words, and half-words are swapped.	{B0, B1, B2, B3}

Bit reversal is supported by the BR bit in the CRCCTRL register. The bit reversal operation works in tandem with endian control. For example, Table 20-1 with the BR option set would look like Table 20-2.

Table 20-2. Endian Configuration with Bit Reversal

ENDIAN Encoding	Initial Endian Configuration	Configuration with Bit Reversal (BR = 1)
0x0	Configuration unchanged {B3[31:24], B2[23:16] , B1[15:8], B0[7:0]}	B3[24:31],B2[16:23],B1[8:15],B0[0:7]
0x1	Bytes are swapped in half-words but half-words are not swapped {B2[23:16], B3[31:24], B0[7:0], B1[15:8]}	B2[16:23],B3[24:31],B0[0:7],B1[8:15]
0x2	Half-words are swapped but bytes are not swapped in half-word. {B1[15:8], B0[7:0], B3[31:24], B2[23:16]}	B1[8:15],B0[0:7],B3[24:31],B2[16:23]
0x3	Bytes are swapped in half-words and half-words are swapped {B0[7:0], B1[15:8], B2[23:16], B3[31:24]}	B0[0:7],B1[8:15],B2[16:23],B3[24:31]

20.2 Initialization and Configuration

The following sections describe the initialization and configuration procedures of the CRC module.

20.2.1 CRC Initialization and Configuration

The CRC engine works in push-through mode, which works on streaming data. This section describes the steps for initializing the CRC module:

1. Enable the clock to cryptography module (that includes CRC) by setting the R0 bit in the CRYPTOCLKEN register in the application reset and clock management module (physical address: 0x4402 50B8).
2. Configure the desired CRC data size, bit order, endian configuration, and CRC type by programming the CRC Control (CRCCTRL) register, offset 0xC00.
3. If the CRC value has not been initialized to all 0s or all 1s using the INIT field in the CRCCTRL register, program the initial value in the CRC SEED/Context (CRCSEED) register, offset 0xC10.
4. Repeatedly write the DATAIN field in the CRC Data Input (CRCDIN) register, offset 0xC14. If the SIZE bit in the CRCCTRL register is set to select byte, the CRC engine operates in byte mode and only the least significant byte is used for CRC calculation.
5. When CRC is finished, read the CRCSEED register for the final result. If using post-processing, the raw CRC result is stored in the CRCSEED register and the final, post-processed result can be read from the CRC Post-Processing Result (CRCRSLTPP) register, offset 0xC18. Post-processing options are selectable through the OBR and OLNV bits of the CRCCTRL register.

Copyright © 2017, Texas Instruments Incorporated

20.2.1.1 Data Endian Convention for the CRC Engine

If the input stream is expressed as a byte stream, Din, where Din = {D0, D1, D2, D3, D4, D5, D6, D7, D8, D9, D11, D12, D13, D14, D15, D16.....}, then data should be fed to the CRC engine as follows:

- If operating in byte mode, the CRCDIN register should be written in the following order:
  1. {00, 00, 00, D0}
  2. {00, 00, 00, D1}
  3. {00, 00, 00, D2}
  4. {00, 00, 00, D3}
  5. {00, 00, 00, D4}
  6. {00, 00, 00, D5}
  7. {00, 00, 00, D6}
  8. .....
  9. .....
- If operating in word mode, the CRCDIN register should be written in the following order:
  1. {D3, D2, D1, D0}
  2. {D7, D6, D5, D4}
  3. {D11, D10, D9, D8}
  4. .....
  5. .....

Copyright © 2017, Texas Instruments Incorporated

20.3 CRC Registers

Table 20-3 lists the memory-mapped registers for the CCM_REGISTER_MAP. All register offset addresses not listed in Table 20-3 should be considered as reserved locations and the register contents should not be modified.

The offset listed is a hexadecimal increment to the register's address, relative to the base address 0x4403.0000.

Table 20-3. CRC Registers

Offset	Acronym	Register Name	Section
C00h	CRCCTRL	CRC Control	Section 20.3.1
C10h	CRCSEED	CRC SEED/Context	Section 20.3.2
C14h	CRCDIN	CRC Data Input	Section 20.3.3
C18h	CRCRSLTPP	CRC Post Processing Result	Section 20.3.4

Copyright © 2017, Texas Instruments Incorporated

20.3.1 CRCCTRL Register (Offset = C00h) [reset = 0h]

CRCCTRL is shown in Figure 20-1 and described in Table 20-4.

Return to Summary Table.

The CRC Control (CRCCTRL) register configures control of the CRC.

Figure 20-1. CRCCTRL Register

31	30	29	28	27	26	25	24
RESERVED							
R-0h							
23	22	21	20	19	18	17	16
RESERVED							
R-0h							
15	14	13	12	11	10	9	8
RESERVED	INIT		SIZE	RESERVED		RESINV	OBR
R-0h	R/W-0h		R/W-0h	R-0h		R/W-0h	R/W-0h
7	6	5	4	3	2	1	0
BR	RESERVED	ENDIAN		TYPE			
R/W-0h	R-0h	R/W-0h		R/W-0h			

LEGEND: R/W = Read/Write; R = Read only; W1toCl = Write 1 to clear bit; *-n* = value after reset

Table 20-4. CRCCTRL Register Field Descriptions

Bit	Field	Type	Reset	Description
31-15	RESERVED	R	0h	
14-13	INIT	R/W	0h	CRC Initialization Determines initialization value of CRC. This field is self-clearing. With the first write to the CRC Data Input (CRCDIN) register, this value clears to zero and remains zero for the rest of the operation unless written again. 0h = Use the CRCSEED register context as the starting value 1h = Reserved 2h = Initialize to all 0s 3h = Initialize to all 1s
12	SIZE	R/W	0h	Input Data Size 0h = 32-bit (word) 1h = 8-bit (byte)
11-10	RESERVED	R	0h	
9	RESINV	R/W	0h	Result Inverse Enable 0h = No effect 1h = Invert the result bits before storing in the CRCRSLTPP register.
8	OBR	R/W	0h	Output Reverse Enable Refer to Table 20-2 for more information regarding bit reversal. 0h = No change to result. 1h = Bit reverse the output result byte before storing to CRCRSLTPP register. The reversal is applied to all bytes in a word.
7	BR	R/W	0h	Bit Reverse Enable Refer to Table 20-2 for more information regarding bit reversal. 0h = No change to result. 1h = Bit reverse the input byte for all bytes in a word.
6	RESERVED	R	0h	

Copyright © 2017, Texas Instruments Incorporated

Table 20-4. CRCCTRL Register Field Descriptions (continued)

Bit	Field	Type	Reset	Description
5-4	ENDIAN	R/W	0h	Endian Control This field is used to program the endian configuration. The encodings below are with respect to an input word = (B3, B2, B1, B0) Refer to Table 20-1 for more information regarding endian configuration and control. 0h = Configuration unchanged. (B3, B2, B1, B0) 1h = Bytes are swapped in half-words but half-words are not swapped (B2, B3, B0, B1) 2h = Half-words are swapped but bytes are not swapped in half-word. (B1, B0, B3, B2) 3h = Bytes are swapped in half-words and half-words are swapped. (B0, B1, B2, B3)
3-0	TYPE	R/W	0h	Operation Type The TYPE value in the CRCCTRL register should be exclusive. 0h = Polynomial 0x8005 1h = Polynomial 0x1021 2h = Polynomial 0x4C11DB7 3h = Polynomial 0x1EDC6F41 4h - 7h = Reserved 8h = TCP checksum 9h - Fh = Reserved

Copyright © 2017, Texas Instruments Incorporated

20.3.2 CRCSEED Register (Offset = C10h) [reset = 0h]

CRCSEED is shown in Figure 20-2 and described in Table 20-5.

Return to Summary Table.

The CRC SEED/Context (CRCSEED) register is initially written with one of the following three values, depending on the encoding of the INIT field in the CRCCTRL register:

- The context value written to the CRCSEED register. This encoding is for SEED values from a previous CRC calculation or a specific protocol. (INIT=0x0)
- 0x0000.0000 (INIT=0x2)
- 0x1111.1111 (INIT=0x3)

Figure 20-2. CRCSEED Register

31	30	29	28	27	26	25	24	23	22	21	20	19	18	17	16	15	14	13	12	11	10	9	8	7	6	5	4	3	2	1	0
SEED																															
R/W-0h																															

LEGEND: R/W = Read/Write; R = Read only; W1toCl = Write 1 to clear bit; *-n* = value after reset

Table 20-5. CRCSEED Register Field Descriptions

Bit	Field	Type	Reset	Description
31-0	SEED	R/W	0h	SEED/Context Value This register contains the starting seed of the CRC and checksum operation. This register also holds the latest result of CRC or checksum operation.

Copyright © 2017, Texas Instruments Incorporated

20.3.3 CRCDIN Register (Offset = C14h) [reset = 0h]

CRCDIN is shown in Figure 20-3 and described in Table 20-6.

Return to Summary Table.

The application writes the CRC Data Input (CRCDIN) register with the next byte or word to compute.

Figure 20-3. CRCDIN Register

31	30	29	28	27	26	25	24	23	22	21	20	19	18	17	16	15	14	13	12	11	10	9	8	7	6	5	4	3	2	1	0
DATAIN																															
R/W-0h																															

LEGEND: R/W = Read/Write; R = Read only; W1toCl = Write 1 to clear bit; *-n* = value after reset

Table 20-6. CRCDIN Register Field Descriptions

Bit	Field	Type	Reset	Description
31-0	DATAIN	R/W	0h	Data Input This register contains the input data value for the CRC or checksum operation.

Copyright © 2017, Texas Instruments Incorporated

20.3.4 CRCRSLTPP Register (Offset = C18h) [reset = 0h]

CRCRSLTPP is shown in Figure 20-4 and described in Table 20-7.

Return to Summary Table.

This register contains the post-processed CRC result, as configured by the CRCCTRL register.

Figure 20-4. CRCRSLTPP Register

31	30	29	28	27	26	25	24	23	22	21	20	19	18	17	16	15	14	13	12	11	10	9	8	7	6	5	4	3	2	1	0
RSLTPP																															
RO-0h																															

LEGEND: R/W = Read/Write; R = Read only; W1toCl = Write 1 to clear bit; *-n* = value after reset

Table 20-7. CRCRSLTPP Register Field Descriptions

Bit	Field	Type	Reset	Description
31-0	RSLTPP	RO	0h	Post Processing Result This register contains the post-processed CRC result.

Copyright © 2017, Texas Instruments Incorporated

On Chip Parallel Flash

The CC3220SF microcontroller comes with 1024 KB of on-chip flash memory, located at address 0x0100.0000 of the device memory map, and a well-defined programming register interface located at 0x400F.D000.

The microcontroller also implements a 128-bit-wide instruction pre-fetch buffer to enhance the in-place execution performance of the user application code executing from the flash memory.

Topic **Page**

21.1 Flash Memory Configuration **745**
21.2 Interrupts **745**
21.3 Flash Memory Programming **745**
21.4 32-Word Flash Memory Write Buffer **746**
21.5 Flash Registers **747**
21.6 CC3220SF Boot Flow **760**
21.7 Flash User Application and Memory Partition **760**
21.8 Programming, Bootstrapping, and Updating the Flash User Application **761**
21.9 Image Authentication and Integrity Check **762**
21.10 Debugging Flash User Application Using JTAG **763**

Copyright © 2017, Texas Instruments Incorporated

21.1 Flash Memory Configuration

The flash memory is configured as two of 2 × 512-KB banks, organized such that one can be accessed for programming while reading or execution from the other. The memory can also be seen as 512 × 2-KB pages that can be independently erased.

21.2 Interrupts

The flash memory controller can generate interrupts when one of the following conditions are observed:

- Programming interrupt: signals when a program or erase action is complete (PRIS)
- Invalid data interrupt: signals when a bit in flash that was previously programmed as a 0 is now requested to be programmed as a 1 (INVDRIS)
- Erase error interrupt: indicates an ERASE operation failed (ERRIS)
- Programming error interrupt: indicates a PROGRAM operation failed (PROGRIS)

The interrupt events that can trigger a controller-level interrupt are defined in the Flash Controller Masked Interrupt Status (FCMIS) register, by setting the corresponding MASK bits. If interrupts are not used, the raw interrupt status is always visible through the Flash Controller Raw Interrupt status (FCRIS) register.

Interrupts are always cleared (for both the FCMIS and FCRIS registers) by writing a 1 to the corresponding bit in the Flash Controller Masked Interrupt Status and Clear (FCMISC) register.

21.3 Flash Memory Programming

The CC3220SF flash memory controller provides a well-defined register interface for flash memory programming. All erase and program operations are handled through three registers:

- Flash Memory Address (FMA)
- Flash Memory Data (FMD)
- Flash Memory Control (FMC)

When a flash memory operation (write, page erase, or mass erase) is executed in a flash bank, access to that particular bank is inhibited. As a result, instruction and literal fetches to the bank are held off until the flash memory operation is complete. If an instruction execution is required during a flash memory operation, the executing code must be placed in SRAM or another bank, and executed from there while the flash operation is in progress.

NOTE: When programming flash memory, the following characteristics of the memory must be considered:

- Only an erase can change bits from 0 to 1
- A write can only change bits from 1 to 0. If the write attempts to change a 0 to a 1, the write fails and no bits are changed.
- All flash operations are completed before entering sleep. Flash is disabled before entering LPDS or hibernate.

To program a 32-bit word:

1. Write source data to the FMD register.
2. Write the target address to the FMA register.
3. Write the flash memory write key and the WRITE bit (a value of 0xA442.0001) to the FMC register.
4. Poll the FMC register until the WRITE bit is cleared.

To perform an erase of a 2 KB page:

1. Write the 2-KB-aligned page address to the FMA register.
2. Write the flash memory write key and the ERASE bit (a value of 0xA442.0002) to the FMC register.
3. Poll the FMC register until the ERASE bit is cleared.

Copyright © 2017, Texas Instruments Incorporated

To perform a mass erase of the flash memory:

1. Write the flash memory write key and the MERASE bit (a value of 0xA442.0004) to the FMC register.
2. Poll the FMC register until the MERASE bit is cleared.

21.4 32-Word Flash Memory Write Buffer

A 32-word write buffer provides the capability to perform faster write accesses to the flash memory. The data for the buffered write is written to the Flash Write Buffer (FWBn) registers.

The registers are 32-word aligned with flash memory, and therefore the register FWB0 corresponds with the address in FMA where bits [6:0] of FMA are all 0. FWB1 corresponds with the address in FMA + 0x4 and so forth. Only the FWBn registers that have been updated since the previous buffered flash memory write operation are written. The Flash Write Buffer Valid (FWBVAL) register shows which registers have been written since the last buffered flash memory write operation. This register contains a bit for each of the 32 FWBn registers, where bit[n] of FWBVAL corresponds to FWBn. The FWBn register has been updated if the corresponding bit in the FWBVAL register is set.

To program 32 words with a single buffered flash memory write operation:

1. Write the source data to the FWBn registers.
2. Write the target address to the FMA register. This must be a 32-word aligned address (that is, bits [6:0] in FMA must be 0s).
3. Write the flash memory write key and the WRBUF bit to the FMC2 register.
4. Poll the FMC register until the WRITE bit is cleared.

Copyright © 2017, Texas Instruments Incorporated

21.5 Flash Registers

Table 21-1 lists the memory-mapped flash registers. All register offset addresses not listed in Table 21-1 should be considered as reserved locations and the register contents should not be modified.

The offset listed is a hexadecimal increment to the register address. The flash memory register offsets are relative to the flash memory control base address of 0x400F.D000.

Table 21-1. Flash Registers

Offset	Acronym	Register Name	Section
0h	FMA	Flash Memory Address	Section 21.5.1
4h	FMD	Flash Memory Data	Section 21.5.2
8h	FMC	Flash Memory Control	Section 21.5.3
Ch	FCRIS	Flash Controller Raw Interrupt Status	Section 21.5.4
10h	FCIM	Flash Controller Interrupt Mask	Section 21.5.5
14h	FCMISC	Flash Controller Masked Interrupt Status and Clear	Section 21.5.6
20h	FMC2	Flash Memory Control 2	Section 21.5.7
30h	FWBVAL	Flash Write Buffer Valid	Section 21.5.8
100h - 17Ch	FWBn	Flash Write Buffer n	Section 21.5.9

Copyright © 2017, Texas Instruments Incorporated

21.5.1 FMA Register (Offset = 0h) [reset = 0h]

FMA is shown in Figure 21-1 and described in Table 21-2.

Return to Summary Table.

During a write operation, this register contains a 4-byte-aligned address and specifies where the data is written. The alignment requirements must be met by software to avoid unpredictable results of the operation.

Figure 21-1. FMA Register

31	30	29	28	27	26	25	24	23	22	21	20	19	18	17	16	15	14	13	12	11	10	9	8	7	6	5	4	3	2	1	0
RESERVED												OFFSET																			
R-0h												R/W-0h																			

LEGEND: R/W = Read/Write; R = Read only; W1toCl = Write 1 to clear bit; *-n* = value after reset

Table 21-2. FMA Register Field Descriptions

Bit	Field	Type	Reset	Description
31-20	RESERVED	R	0h	Software should not rely on the value of a reserved bit. To provide compatibility with future products, the value of a reserved bit should be preserved across a read-modify-write operation.
19-0	OFFSET	R/W	0h	Address Offset Address offset in flash memory where the operation is performed, except for non-volatile registers

Copyright © 2017, Texas Instruments Incorporated

21.5.2 FMD Register (Offset = 4h) [reset = 0h]

FMD is shown in Figure 21-2 and described in Table 21-3.

Return to Summary Table.

This register contains the data to be written during the programming cycle. This register is not used during erase cycles.

Figure 21-2. FMD Register

31	30	29	28	27	26	25	24	23	22	21	20	19	18	17	16	15	14	13	12	11	10	9	8	7	6	5	4	3	2	1	0
DATA																															
R/W-0h																															

LEGEND: R/W = Read/Write; R = Read only; W1toCl = Write 1 to clear bit; *-n* = value after reset

Table 21-3. FMD Register Field Descriptions

Bit	Field	Type	Reset	Description
31-0	DATA	R/W	0h	Data Value Data value for write operation

Copyright © 2017, Texas Instruments Incorporated

21.5.3 FMC Register (Offset = 8h) [reset = 0h]

FMC is shown in Figure 21-3 and described in Table 21-4.

Return to Summary Table.

When this register is written, the flash memory controller initiates the appropriate access cycle for the location specified by the Flash Memory Address (FMA) register. If the access is a write access, the data contained in the Flash Memory Data (FMD) register is written to the specified address.

This register must be the final register written, and initiates the memory operation. The four control bits in the lower byte of this register are used to initiate memory operations.

Do not set multiple control bits, as the results of such an operation are unpredictable.

Figure 21-3. FMC Register

31	30	29	28	27	26	25	24
WRKEY							
WO-0h							
23	22	21	20	19	18	17	16
WRKEY							
WO-0h							
15	14	13	12	11	10	9	8
RESERVED							
R-0h							
7	6	5	4	3	2	1	0
RESERVED					MERASE	ERASE	WRITE
R-0h					R/W-0h	R/W-0h	R/W-0h

LEGEND: R/W = Read/Write; R = Read only; W1toCl = Write 1 to clear bit; *-n* = value after reset

Table 21-4. FMC Register Field Descriptions

Bit	Field	Type	Reset	Description
31-16	WRKEY	WO	0h	Flash Memory Write Key This field contains a write key, which is used to minimize the incidence of accidental flash memory writes. The value 0xA442 must be written into this field for a flash memory write to occur. Writes to the FMC register without this WRKEY value are ignored. A read of this field returns the value 0.
15-3	RESERVED	R	0h	Software should not rely on the value of a reserved bit. To provide compatibility with future products, the value of a reserved bit should be preserved across a readmodify- write operation.
2	MERASE	R/W	0h	Mass Erase Flash Memory This bit is used to mass erase the flash main memory and to monitor the progress of that process. 0h = A write of 0 has no effect on the state of this bit. When read, a 0 indicates that the previous mass erase access is complete. 1h = Set this bit to erase the flash main memory. When read, a 1 indicates that the previous mass erase access is not complete.
1	ERASE	R/W	0h	Erase a Page of Flash Memory This bit is used to erase a page of flash memory and to monitor the progress of that process. 0h = A write of 0 has no effect on the state of this bit. When read, a 0 indicates that the previous page erase access is complete. 1h = Set this bit to erase the flash memory page specified by the contents of the FMA register. When read, a 1 indicates that the previous page erase access is not complete.

Copyright © 2017, Texas Instruments Incorporated

Table 21-4. FMC Register Field Descriptions (continued)

Bit	Field	Type	Reset	Description
0	WRITE	R/W	0h	Write a Word into Flash Memory This bit is used to write a word into flash memory and to monitor the progress of that process. 0h = A write of 0 has no effect on the state of this bit. When read, a 0 indicates that the previous write update access is complete. 1h = Set this bit to write the data stored in the FMD register into the flash memory location specified by the contents of the FMA register. When read, a 1 indicates that the write update access is not complete.

Copyright © 2017, Texas Instruments Incorporated

21.5.4 FCRIS Register (Offset = Ch) [reset = 0h]

FCRIS is shown in Figure 21-4 and described in Table 21-5.

Return to Summary Table.

This register indicates that the flash memory controller has an interrupt condition. An interrupt is sent to the interrupt controller only if the corresponding FCIM register bit is set.

Figure 21-4. FCRIS Register

31	30	29	28	27	26	25	24
RESERVED							
R-0h							
23	22	21	20	19	18	17	16
RESERVED							
R-0h							
15	14	13	12	11	10	9	8
RESERVED		PROGRIS	RESERVED	ERRIS	INVDRIS	RESERVED	
R-0h		R-0h	R-0h	R-0h	R-0h	R-0h	
7	6	5	4	3	2	1	0
RESERVED						PRIS	RESERVED
R-0h						R-0h	R-0h

LEGEND: R/W = Read/Write; R = Read only; W1toCl = Write 1 to clear bit; *-n* = value after reset

Table 21-5. FCRIS Register Field Descriptions

Bit	Field	Type	Reset	Description
31-14	RESERVED	R	0h	Software should not rely on the value of a reserved bit. To provide compatibility with future products, the value of a reserved bit should be preserved across a read-modify-write operation.
13	PROGRIS	R	0h	Program Verify Error Raw Interrupt Status This bit is cleared by writing a 1 to the PROGMISC bit in the FCMISC register. 0h = An interrupt has not occurred. 1h = An interrupt is pending because the verify of a PROGRAM operation failed. If this error occurs when using the flash write buffer, software must inspect the affected words to determine where the error occurred.
12	RESERVED	R	0h	Software should not rely on the value of a reserved bit. To provide compatibility with future products, the value of a reserved bit should be preserved across a read-modify-write operation.
11	ERRIS	R	0h	Erase Verify Error Raw Interrupt Status This bit is cleared by writing a 1 to the ERMISC bit in the FCMISC register. 0h = An interrupt has not occurred. 1h = An interrupt is pending because the verify of an ERASE operation failed. If this error occurs when using the flash write buffer, software must inspect the affected words to determine where the error occurred.
10	INVDRIS	R	0h	Invalid Data Raw Interrupt Status This bit is cleared by writing a 1 to the INVMISC bit in the FCMISC register. 0h = An interrupt has not occurred. 1h = An interrupt is pending because a bit that was previously programmed as a 0 is now being requested to be programmed as a 1.
9-2	RESERVED	R	0h	Software should not rely on the value of a reserved bit. To provide compatibility with future products, the value of a reserved bit should be preserved across a read-modify-write operation.

Copyright © 2017, Texas Instruments Incorporated

Table 21-5. FCRIS Register Field Descriptions (continued)

Bit	Field	Type	Reset	Description
1	PRIS	R	0h	Programming Raw Interrupt Status This bit provides status on programming cycles which are write or erase actions generated through the FMC or FMC2 register bits. This bit is cleared by writing a 1 to the PMISC bit in the FCMISC register. 0h = The programming or erase cycle has not completed. 1h = The programming or erase cycle has completed. This status is sent to the interrupt controller when the PMASK bit in the FCIM register is set.
0	RESERVED	R	0h	Software should not rely on the value of a reserved bit. To provide compatibility with future products, the value of a reserved bit should be preserved across a read-modify-write operation.

Copyright © 2017, Texas Instruments Incorporated

21.5.5 FCIM Register (offset = 10h) [reset = 0h]

FCIM is shown in Figure 21-5 and described in Table 21-6.

This register controls whether the flash memory controller generates interrupts to the controller.

Figure 21-5. FCIM Register

31	30	29	28	27	26	25	24
RESERVED							
R-0h							
23	22	21	20	19	18	17	16
RESERVED							
R-0h							
15	14	13	12	11	10	9	8
RESERVED		PROGMSK	RESERVED	ERMSK	INVDMSK	RESERVED	
R-0h		R-0h	R-0h	R-0h	R-0h	R-0h	
7	6	5	4	3	2	1	0
RESERVED						PMSK	RESERVED
R-0h						R-0h	R-0h

LEGEND: R/W = Read/Write; R = Read only; W1toCl = Write 1 to clear bit; *-n* = value after reset

Table 21-6. FCIM Register Field Descriptions

Bit	Field	Type	Reset	Description
31-14	RESERVED	R	0h	Software should not rely on the value of a reserved bit. To provide compatibility with future products, the value of a reserved bit should be preserved across a read-modify-write operation.
13	PROGMSK	R	0h	Program Verify Error Interrupt Mask 0h = The PROGRIS interrupt is suppressed and not sent to the interrupt controller. 1h = An interrupt is sent to the interrupt controller when the PROGRIS bit is set.
12	RESERVED	R	0h	Software should not rely on the value of a reserved bit. To provide compatibility with future products, the value of a reserved bit should be preserved across a read-modify-write operation.
11	ERMSK	R	0h	Erase Verify Error Interrupt Mask 0h = The ERRIS interrupt is suppressed and not sent to the interrupt controller. 1h = An interrupt is sent to the interrupt controller when the ERRIS bit is set.
10	INVDMSK	R	0h	Invalid Data Interrupt Mask 0h = The INVDRIS interrupt is suppressed and not sent to the interrupt controller. 1h = An interrupt is sent to the interrupt controller when the INVDRIS bit is set.
9-2	RESERVED	R	0h	Software should not rely on the value of a reserved bit. To provide compatibility with future products, the value of a reserved bit should be preserved across a read-modify-write operation.
1	PMSK	R	0h	Programming Interrupt Mask This bit controls the reporting of the programming raw interrupt status to the interrupt controller. 0h = The PRIS interrupt is suppressed and not sent to the interrupt controller. 1h = An interrupt is sent to the interrupt controller when the PRIS bit is set.
0	RESERVED	R	0h	Software should not rely on the value of a reserved bit. To provide compatibility with future products, the value of a reserved bit should be preserved across a read-modify-write operation.

Copyright © 2017, Texas Instruments Incorporated

21.5.6 FCMISC Register (Offset = 14h) [reset = 0h]

FCMISC is shown in Figure 21-6 and described in Table 21-7.

Return to Summary Table.

This register provides two functions. First, it reports the cause of an interrupt by indicating which interrupt source or sources are signaling the interrupt. Second, it serves as the method to clear the interrupt reporting.

Figure 21-6. FCMISC Register

31	30	29	28	27	26	25	24
RESERVED							
R-0h							
23	22	21	20	19	18	17	16
RESERVED							
R-0h							
15	14	13	12	11	10	9	8
RESERVED		PROGMISC	RESERVED	ERMISC	INVDMISC	RESERVED	
R-0h		R/W1C-0h	R-0h	R/W1C-0h	R/W1C-0h	R-0h	
7	6	5	4	3	2	1	0
RESERVED						PMISC	RESERVED
R-0h						R/W1C-0h	R-0h

LEGEND: R/W = Read/Write; R = Read only; W1toCl = Write 1 to clear bit; *-n* = value after reset

Table 21-7. FCMISC Register Field Descriptions

Bit	Field	Type	Reset	Description
31-14	RESERVED	R	0h	Software should not rely on the value of a reserved bit. To provide compatibility with future products, the value of a reserved bit should be preserved across a read-modify-write operation.
13	PROGMISC	R/W1C	0h	PROGVER Masked Interrupt Status and Clear Writing a 1 to this bit clears PROGMISC and also the PROGRIS bit in the FCRIS register. 0h = When read, a 0 indicates that an interrupt has not occurred. A write of 0 has no effect on the state of this bit. 1h = When read, a 1 indicates that an unmasked interrupt was signaled.
12	RESERVED	R	0h	Software should not rely on the value of a reserved bit. To provide compatibility with future products, the value of a reserved bit should be preserved across a read-modify-write operation.
11	ERMISC	R/W1C	0h	ERVER Masked Interrupt Status and Clear Writing a 1 to this bit clears ERMISC and also the ERRIS bit in the FCRIS register 0h = When read, a 0 indicates that an interrupt has not occurred. A write of 0 has no effect on the state of this bit. 1h = When read, a 1 indicates that an unmasked interrupt was signaled.
10	INVDMISC	R/W1C	0h	Invalid Data Masked Interrupt Status and Clear Writing a 1 to this bit clears INVDMISC and also the INVDRIS bit in the FCRIS register 0h = When read, a 0 indicates that an interrupt has not occurred. A write of 0 has no effect on the state of this bit. 1h = When read, a 1 indicates that an unmasked interrupt was signaled.
9-2	RESERVED	R	0h	Software should not rely on the value of a reserved bit. To provide compatibility with future products, the value of a reserved bit should be preserved across a read-modify-write operation.

Copyright © 2017, Texas Instruments Incorporated

Table 21-7. FCMISC Register Field Descriptions (continued)

Bit	Field	Type	Reset	Description
1	PMISC	R/W1C	0h	Programming Masked Interrupt Status and Clear Writing a 1 to this bit clears PMISC and also the PRIS bit in the FCRIS register 0h = When read, a 0 indicates that a programming cycle complete interrupt has not occurred. A write of 0 has no effect on the state of this bit. 1h = When read, a 1 indicates that an unmasked interrupt was signaled because a programming cycle completed.
0	RESERVED	R	0h	Software should not rely on the value of a reserved bit. To provide compatibility with future products, the value of a reserved bit should be preserved across a read-modify-write operation.

Copyright © 2017, Texas Instruments Incorporated

21.5.7 FMC2 Register (Offset = 20h) [reset = 0h]

FMC2 is shown in Figure 21-7 and described in Table 21-8.

Return to Summary Table.

When this register is written, the flash memory controller initiates the appropriate access cycle for the location specified by the Flash Memory Address (FMA) register. If the access is a write access, the data contained in the Flash Write Buffer (FWB) registers is written. This register must be the final register written, as it initiates the memory operation.

Figure 21-7. FMC2 Register

31	30	29	28	27	26	25	24
WRKEY							
W-0h							
23	22	21	20	19	18	17	16
WRKEY							
W-0h							
15	14	13	12	11	10	9	8
RESERVED							
R-0h							
7	6	5	4	3	2	1	0
RESERVED							WRBUF
R-0h							R/W-0h

LEGEND: R/W = Read/Write; R = Read only; W1toCl = Write 1 to clear bit; *-n* = value after reset

Table 21-8. FMC2 Register Field Descriptions

Bit	Field	Type	Reset	Description
31-16	WRKEY	W	0h	Flash Memory Write Key This field contains a write key, which is used to minimize the incidence of accidental flash memory writes. The value 0xA442 is used as a key to initiate the appropriate access cycle for the location specified by the address in the FMA register. Writes to the FMC2 register without this WRKEY value are ignored. A read of this field returns the value 0.
15-1	RESERVED	R	0h	Software should not rely on the value of a reserved bit. To provide compatibility with future products, the value of a reserved bit should be preserved across a readmodify- write operation.
0	WRBUF	R/W	0h	Buffered Flash Memory Write This bit is used to start a buffered write to flash memory. When read, a 1 indicates that the previous buffered flash memory write access is not complete. 0h = A write of 0 has no effect on the state of this bit. When read, a 0 indicates that the previous buffered Flash memory write access is complete. 1h = Set this bit to write the data stored in the FWBn registers to the location specified by the contents of the FMA register.

Copyright © 2017, Texas Instruments Incorporated

21.5.8 FWBVAL Register (Offset = 30h) [reset = 0h]

FWBVAL is shown in Figure 21-8 and described in Table 21-9.

Return to Summary Table.

This register provides a bitwise status of which FWBn registers have been written by the processor since the last write of the flash memory write buffer. The entries with a 1 are written in the next write of the flash memory write buffer.

This register is cleared after the write operation by hardware. A protection violation on the write operation also clears this status.

Software can program the same 32 words to various flash memory locations by setting the FWB[n] bits after they are cleared by the write operation. The next write operation then uses the same data as the previous one. In addition, if an FWBn register change should not be written to flash memory, software can clear the corresponding FWB[n] bit to preserve the existing data when the next write operation occurs.

Figure 21-8. FWBVAL Register

31	30	29	28	27	26	25	24	23	22	21	20	19	18	17	16	15	14	13	12	11	10	9	8	7	6	5	4	3	2	1	0
FWB[n]																															
R/W-0h																															

LEGEND: R/W = Read/Write; R = Read only; W1toCl = Write 1 to clear bit; *-n* = value after reset

Table 21-9. FWBVAL Register Field Descriptions

Bit	Field	Type	Reset	Description
31-0	FWB[n]	R/W	0h	Flash Memory Write Buffer Bit 0 corresponds to FWB0, offset 0x100, and bit 31 corresponds to FWB31, offset 0x13C. 0h = The corresponding FWBn register has no new data to be written. 1h = The corresponding FWBn register has been updated since the last buffer write operation and is ready to be written to flash memory.

Copyright © 2017, Texas Instruments Incorporated

21.5.9 FWBn Register (Offset = 100h) [reset = 0h]

FWBn is shown in Figure 21-9 and described in Table 21-10.

Return to Summary Table.

These 32 registers hold the contents of the data to be written into the flash memory on a buffered flash memory write operation. The offset selects one of the 32-bit registers. Only FWBn registers that have been updated since the preceding buffered flash memory write operation are written into the flash memory, so it is not necessary to write the entire bank of registers to write 1 or 2 words. The FWBn registers are written into the flash memory with the FWB0 register corresponding to the address contained in FMA. FWB1 is written to the address FMA+0x4, and so forth. Only data bits that are 0 result in the flash memory being modified. A data bit of 1 leaves the content of the flash memory bit at its previous value.

Figure 21-9. FWBn Register

31	30	29	28	27	26	25	24	23	22	21	20	19	18	17	16	15	14	13	12	11	10	9	8	7	6	5	4	3	2	1	0
DATA																															
R/W-0h																															

LEGEND: R/W = Read/Write; R = Read only; W1toCl = Write 1 to clear bit; *-n* = value after reset

Table 21-10. FWBn Register Field Descriptions

Bit	Field	Type	Reset	Description
31-0	DATA	R/W	0h	Data to be written into the flash memory

Copyright © 2017, Texas Instruments Incorporated

21.6 CC3220SF Boot Flow

Figure 21-10 illustrates a simplified boot flow of the CC3220SF microcontroller.

Figure 21-10. CC3220SF Boot Flow

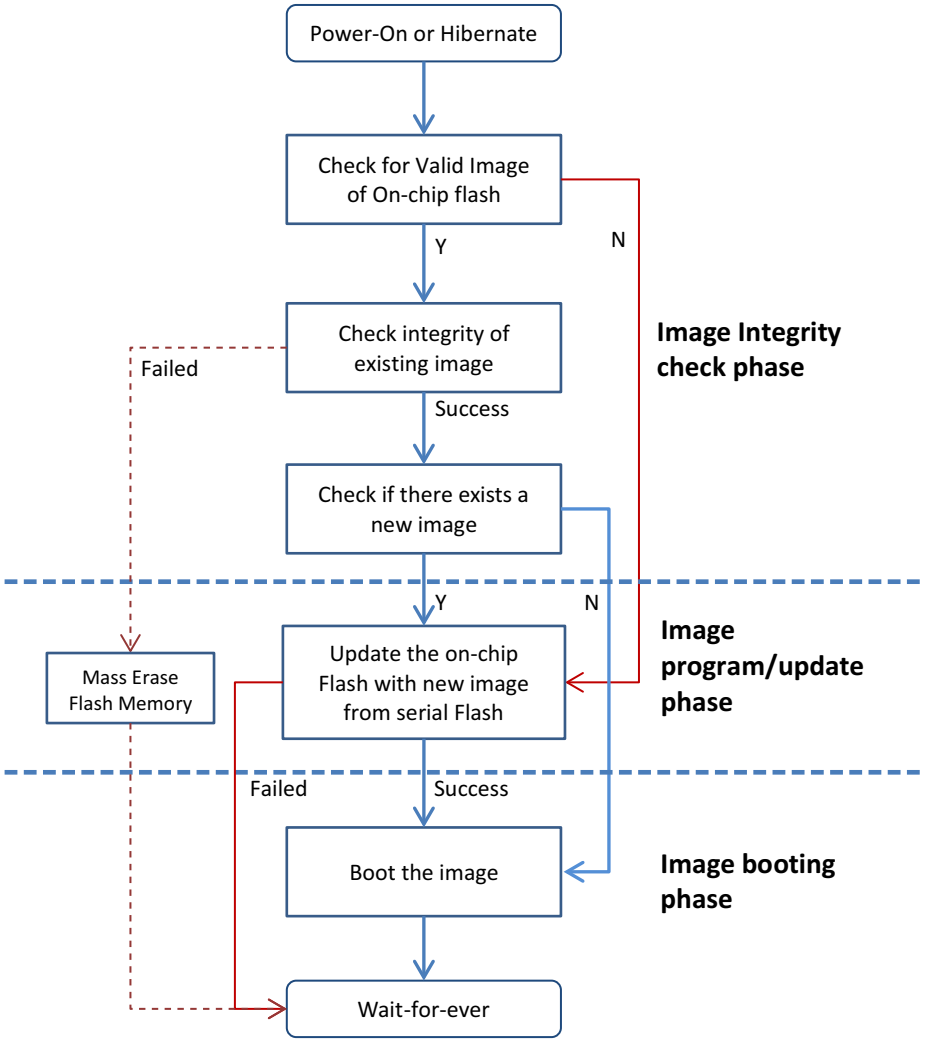

21.7 Flash User Application and Memory Partition

The 1024 KB on-chip flash memory is split into two sections; the initial 2 KB section is the image header that holds the image attributes. The header is automatically generated by the bootloader as part of transferring the image from the serial flash to the on-chip flash.

The following 1022 KB section can be used by the user application image.

The header is auto-generated by the bootloader in all cases, except when the user will program a debug image on to the serial flash. The debug image is handled as a special case, where the serial flash must be formatted in development mode. In development mode, unlike production mode, the JTAG access is granted to external debuggers.

The auto-generated header should not be altered by the user application, as this would be detected as a security alert by the bootloader. This header holds the following image attributes:

- Header Valid Marker: This 32-bit pattern marks the validity of the header and the image.
- Image Size: This 32-bit field holds the size of the following image in bytes.

Copyright © 2017, Texas Instruments Incorporated

- JTAG Image Marker: This 32-bit pattern marks the following image as debug image and indicates to the bootloader to skip the image update and validity checks on subsequent microcontroller resets.

The 1024 KB flash memory region is organized as shown in Figure 21-11.

Figure 21-11. Flash Memory Partition

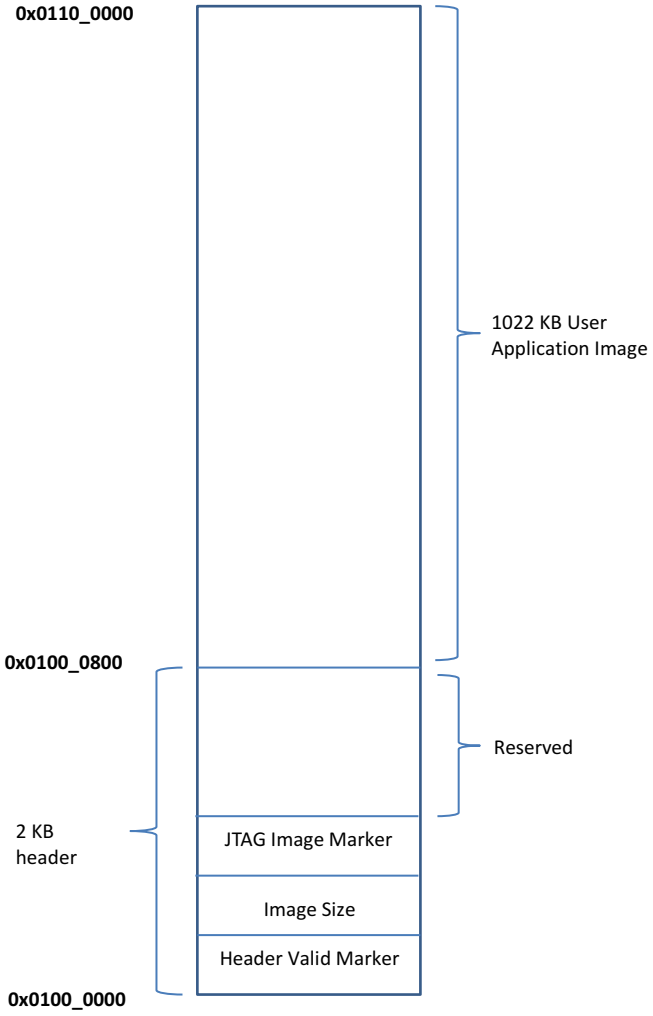

NOTE: The effective maximum size of the user application is limited to 1022 KB, and linked to run from 0x0100_0800.

21.8 Programming, Bootstrapping, and Updating the Flash User Application

Direct programming of the on-chip flash using JTAG or flash-loaders is not supported by the CC3200SF device. During programming, the image is always first downloaded onto the serial flash, using the file name /sys/mcuflashimg.bin. During the first time boot, the bootloader reads the encrypted image from serial flash, decrypts it, and writes it onto the on-chip flash. The bootloader ensures that the on-chip flash image is always in sync with that on the serial flash. Otherwise, if a valid image is detected on the on-chip flash, the bootloader will pass on the execution control to that image.

The user application image binary should be linked to run from 0x0100_0800.

Figure 21-12 shows the final structure of the image on the serial flash, where the initial 20-byte SHA-1 hash is auto-computed by the image creator and appended to the image provided by the user.

Copyright © 2017, Texas Instruments Incorporated

Figure 21-12. User Application Image Binary Structure on Serial Flash

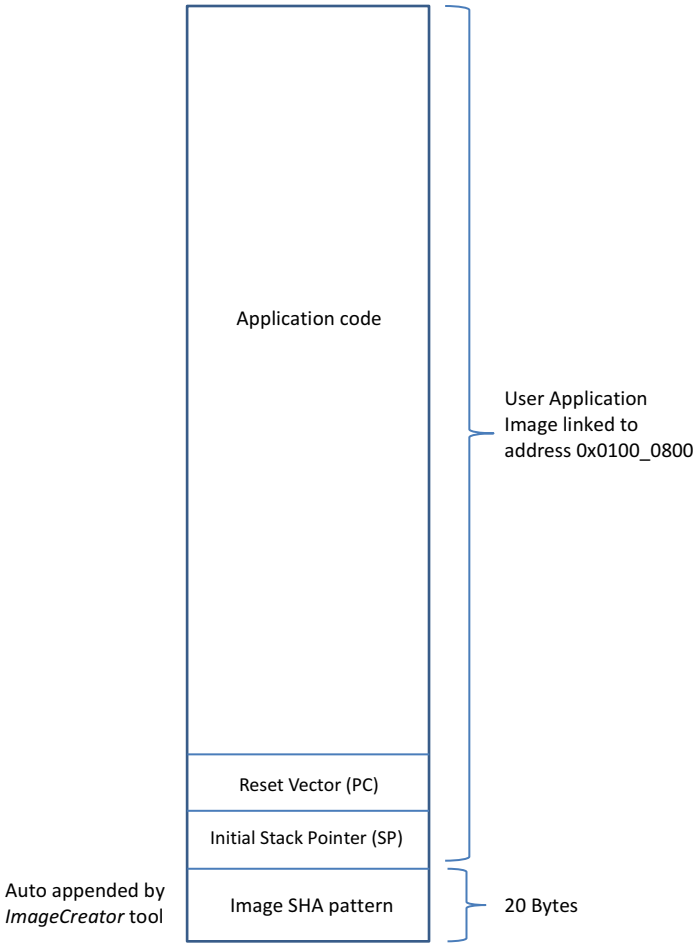

Transferring the image from the serial flash to the on-chip flash is a multistep process. The process starts by detecting the /sys/mcuflashimg.bin file on the serial flash. Once the file is detected, the whole image is transferred to on-chip flash, skipping the first 20-bytes. A SHA-1 hash for the transferred portion is computed and verified against the SHA-1 at offset 0 on the serial flash file. Finally, the header is written onto the on-chip flash offset 0, to identify the image as valid.

The first 20-byte hash part of the serial flash file /sys/mcuflashimg.bin is neither copied nor takes part in SHA-1 generation by the bootloader. It serves as an identifier for detecting a new image on serial flash. A mismatch with the previously stored hash triggers an update cycle, and the transfer process is repeated.

21.9 Image Authentication and Integrity Check

The device supports a maximum size of 1022KB for the user application. The application binary must be supplied to the programmer, along with a signature. The signature is authenticated (or chain-authenticated) by a Root CA in the TI-provided certificate store for programming. This is to inhibit the execution of an image from an unknown vendor.

The CC3220SF bootloader, on every exit from power-on or hibernate, checks the integrity of the exiting (and marked-valid) user application image binary on on-chip flash against the auto-generated SHA-1 of the image on serial flash, saved during the program and update phase of the on-chip flash. In case of a mismatch, the on-chip flash is mass erased to protect the user application binary.

The SHA-1 hash makes a link between the image on the on-chip flash and the serial flash, which in turn is linked to the device using a device-specific key. Any change in the serial flash after the image was copied on to the on-chip flash will be detected and will either be mass erased or updated to the new image on serial flash.

Copyright © 2017, Texas Instruments Incorporated

Figure 21-13 illustrates a simplified view of the image transfer process, from serial flash to on-chip flash in a CC3220SF device.

Figure 21-13. On-Chip Flash Programming and Update

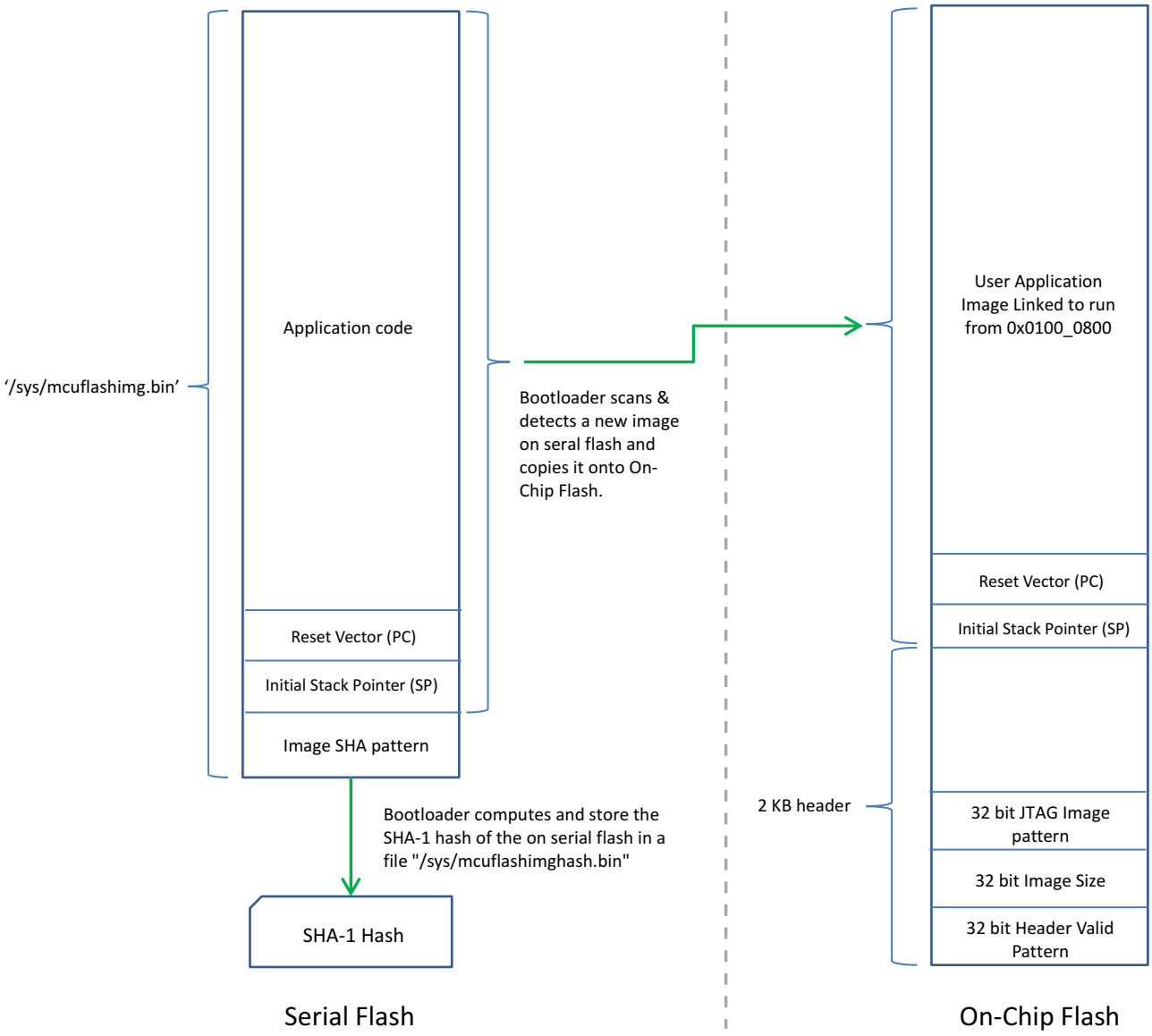

21.10 Debugging Flash User Application Using JTAG

A debug image can be downloaded directly onto on-chip flash using tools such as flash-loaders over JTAG, usually available with compiler IDEs. These tools generally use the microcontroller's JTAG interface to program the on-chip flash. On the CC3220SF, this mode of operation, where an external debugger can access the core's JTAG, is only supported when the serial flash is formatted in development mode.

A debug image should follow a different format than the production image. Such an image should be pre-pended with a debug header, as shown in Figure 21-14, that indicates to the bootloader that the following image is a debug image, should skip the integrity check phase of booting, and should not attempt an erase of the image.

Unlike a production image, a debug image is written to the 0x0100_0000 address. Figure 21-14 shows the structure of an image capable of being debugged.

Copyright © 2017, Texas Instruments Incorporated

Figure 21-14. Flash Debug Image Layout

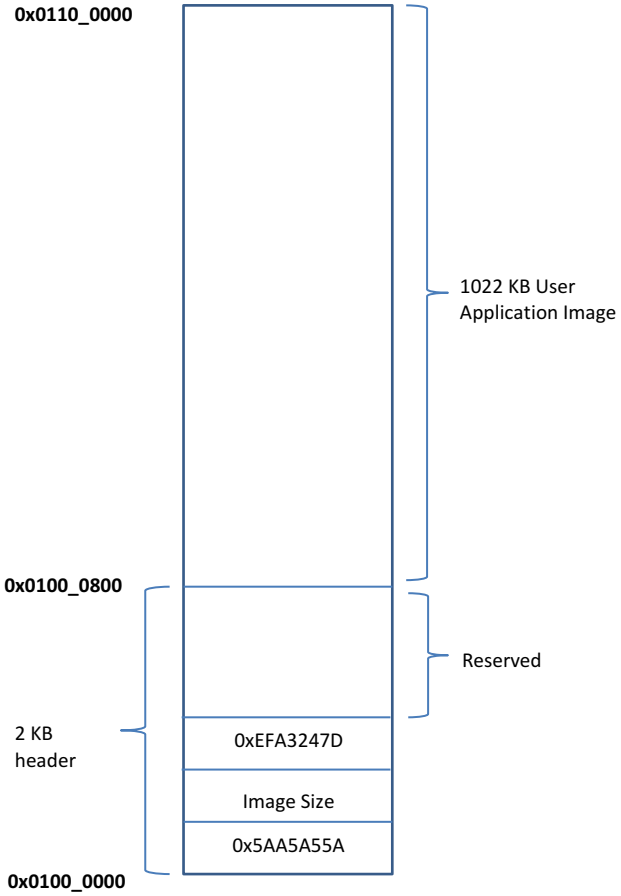

Copyright © 2017, Texas Instruments Incorporated

Software Development Kit Examples

The CC3220 SDK kit contains several examples of sample code for most of the peripherals covered in this document. Table A-1 provides links to examples for each of the peripherals. Also refer to the CC3220 SDK Sample Applications wiki page.

Table A-1. Peripheral Samples

Peripheral	Chapter	Sample Examples with URLs
DMA	Chapter 4	1. uDMA Application 2. UART DMA Application
GPIO	Chapter 5	1. Blinky Application 2. Timer Demo Application
UART	Chapter 6	1. UART Demo Application 2. UART DMA Application
I2C	Chapter 7	1. I2C Application
SPI	Chapter 8	1. SPI Reference Application
GPT	Chapter 9	1. PWM Application
WDT	Chapter 10	1. Watchdog Demo Application
SD Host	Chapter 11	1. SDHost Application 2. SDHost FatFS Application
I2S	Chapter 12	1. Wi-Fi Audio Application
ADC	Chapter 13	1. ADC Reference
Parallel camera interface	Chapter 14	1. Camera Application

Copyright © 2017, Texas Instruments Incorporated

CC3220 Miscellaneous Registers

This chapter lists miscellaneous registers which do not belong to any one module, but hold information corresponding to multiple modules and peripherals.

B.1 Miscellaneous Register Summary

Table B-1 lists the memory-mapped registers for the REGISTER_SUMMARY. All register offset addresses not listed in Table B-1 should be considered as reserved locations and the register contents should not be modified.

Table B-1. Miscellaneous Register Summary

Offset	Physical Address	Acronym	Register Name	Section
8Ch	0x4402 608C	DMA_IMR	DMA_IMR Register	Section B.1.1
90h	0x4402 6090	DMA_IMS	DMA_IMS Register	Section B.1.2
94h	0x4402 6094	DMA_IMC	DMA_IMC Register	Section B.1.3
9Ch	0x4402 609C	DMA_ICR	DMA_ICR Register	Section B.1.4
A0h	0x4402 60A0	DMA_MIS	DMA_MIS Register	Section B.1.5
A4h	0x4402 60A4	DMA_RIS	DMA_RIS Register	Section B.1.6
B0h	0x4402 60B0	GPTTRIGSEL	GPTTRIGSEL Register	Section B.1.7

Copyright © 2017, Texas Instruments Incorporated

B.1.1 DMA_IMR Register (offset = 8Ch) [reset = FF0Fh]

Register mask: FF0Fh

DMA_IMR is shown in Figure B-1 and described in Table B-2.

Figure B-1. DMA_IMR Register

31	30	29	28	27	26	25	24
RESERVED							
R-X							
23	22	21	20	19	18	17	16
RESERVED							
R-X							
15	14	13	12	11	10	9	8
ADCWR				MCASPWR	MCASPRD	CAMEMPT	CAMFULL
R/W-Fh				R/W-1h	R/W-1h	R/W-1h	R/W-1h
7	6	5	4	3	2	1	0
RESERVED				APSPIWR	APSPIRD	SDIOMWR	SDIOMRD
R-X				R/W-1h	R/W-1h	R/W-1h	R/W-1h

Table B-2. DMA_IMR Register Field Descriptions

Bit	Field	Type	Reset	Description
31-16	RESERVED	R	X	
15-12	ADCWR	R/W	Fh	ADC_WR_DMA_DONE_INT_MASK bit 15: ADC channel 6 interrupt enable/disable bit 14: ADC channel 4 interrupt enable/disable bit 13: ADC channel 2 interrupt enable/disable bit 12: ADC channel 0 interrupt enable/disable 0h = interrupt enabled 1h = disable corresponding interrupt
11	MCASPWR	R/W	1h	MCASP_WR_DMA_DONE_INT_MASK 0h = interrupt enabled 1h = disable corresponding interrupt
10	MCASPRD	R/W	1h	MCASP_RD_DMA_DONE_INT_MASK 0h = interrupt enabled 1h = disable corresponding interrupt
9	CAMEMPT	R/W	1h	CAM_FIFO_EMPTY_DMA_DONE_INT_MASK 0h = interrupt enabled 1h = disable corresponding interrupt
8	CAMFULL	R/W	1h	CAM_THRESHHOLD_DMA_DONE_INT_MASK 0h = interrupt enabled 1h = disable corresponding interrupt
7-4	RESERVED	R	X	
3	APSPIWR	R/W	1h	APPS_SPI_WR_DMA_DONE_INT_MASK 0h = interrupt enabled 1h = disable corresponding interrupt
2	APSPIRD	R/W	1h	APPS_SPI_RD_DMA_DONE_INT_MASK 0h = interrupt enabled 1h = disable corresponding interrupt
1	SDIOMWR	R/W	1h	SDIOM_WR_DMA_DONE_INT_MASK 0h = interrupt enabled 1h = disable corresponding interrupt

Copyright © 2017, Texas Instruments Incorporated

Table B-2. DMA_IMR Register Field Descriptions (continued)

Bit	Field	Type	Reset	Description
0	SDIOMRD	R/W	1h	SDIOM_RD_DMA_DONE_INT_MASK 0h = interrupt enabled 1h = disable corresponding interrupt

Copyright © 2017, Texas Instruments Incorporated

B.1.2 DMA_IMS Register (offset = 90h) [reset = 0h]

Register mask: FF0Fh

DMA_IMS is shown in Figure B-2 and described in Table B-3.

Figure B-2. DMA_IMS Register

31	30	29	28	27	26	25	24
RESERVED							
R-X							
23	22	21	20	19	18	17	16
RESERVED							
R-X							
15	14	13	12	11	10	9	8
ADCWR				MCASPWR	MCASPRD	CAMEMPT	CAMFULL
R/W-0h				R/W-0h	R/W-0h	R/W-0h	R/W-0h
7	6	5	4	3	2	1	0
RESERVED				APSPIWR	APSPIRD	SDIOMWR	SDIOMRD
R-X				R/W-0h	R/W-0h	R/W-0h	R/W-0h

Table B-3. DMA_IMS Register Field Descriptions

Bit	Field	Type	Reset	Description
31-16	RESERVED	R	X	
15-12	ADCWR	R/W	0h	ADC_WR_DMA_DONE_INT_MASK_SET bit 15: ADC channel 6 DMA Done IRQ bit 14: ADC channel 4 DMA Done IRQ bit 13: ADC channel 2 DMA Done IRQ bit 12: ADC channel 0 DMA Done IRQ 0h = No effect 1h = Set mask of the corresponding DMA DONE IRQ
11	MCASPWR	R/W	0h	MCASP_WR_DMA_DONE_INT_MASK_SET 0h = No effect 1h = Set mask of the corresponding DMA DONE IRQ
10	MCASPRD	R/W	0h	MCASP_RD_DMA_DONE_INT_MASK_SET 0h = No effect 1h = Set mask of the corresponding DMA DONE IRQ
9	CAMEMPT	R/W	0h	CAM_FIFO_EMPTY_DMA_DONE_INT_MASK_SET 0h = No effect 1h = Set mask of the corresponding DMA DONE IRQ
8	CAMFULL	R/W	0h	CAM_THRESHHOLD_DMA_DONE_INT_MASK_SET 0h = No effect 1h = Set mask of the corresponding DMA DONE IRQ
7-4	RESERVED	R	X	
3	APSPIWR	R/W	0h	APPS_SPI_WR_DMA_DONE_INT_MASK_SET 0h = No effect 1h = Set mask of the corresponding DMA DONE IRQ
2	APSPIRD	R/W	0h	APPS_SPI_RD_DMA_DONE_INT_MASK_SET 0h = No effect 1h = Set mask of the corresponding DMA DONE IRQ
1	SDIOMWR	R/W	0h	SDIOM_WR_DMA_DONE_INT_MASK_SET 0h = No effect 1h = Set mask of the corresponding DMA DONE IRQ

Copyright © 2017, Texas Instruments Incorporated

Table B-3. DMA_IMS Register Field Descriptions (continued)

Bit	Field	Type	Reset	Description
0	SDIOMRD	R/W	0h	SDIOM_RD_DMA_DONE_INT_MASK_SET 0h = No effect 1h = Set mask of the corresponding DMA DONE IRQ

Copyright © 2017, Texas Instruments Incorporated

B.1.3 DMA_IMC Register (offset = 94h) [reset = 0h]

Register mask: FF0Fh

DMA_IMC is shown in Figure B-3 and described in Table B-4.

Figure B-3. DMA_IMC Register

31	30	29	28	27	26	25	24
RESERVED							
R-X							
23	22	21	20	19	18	17	16
RESERVED							
R-X							
15	14	13	12	11	10	9	8
ADCWR				MCASPWR	MCASPRD	CAMEMPT	CAMFULL
R/W-0h				R/W-0h	R/W-0h	R/W-0h	R/W-0h
7	6	5	4	3	2	1	0
RESERVED				APSPIWR	APSPIRD	SDIOMWR	SDIOMRD
R-X				R/W-0h	R/W-0h	R/W-0h	R/W-0h

Table B-4. DMA_IMC Register Field Descriptions

Bit	Field	Type	Reset	Description
31-16	RESERVED	R	X	
15-12	ADCWR	R/W	0h	ADC_WR_DMA_DONE_INT_MASK_CLR bit 15: ADC channel 6 DMA Done IRQ mask bit 14: ADC channel 4 DMA Done IRQ mask bit 13: ADC channel 2 DMA Done IRQ mask bit 12: ADC channel 0 DMA Done IRQ mask 0h = No effect 1h = Clear mask of the corresponding DMA DONE IRQ
11	MCASPWR	R/W	0h	MCASP_WR_DMA_DONE_INT_MASK_CLR 0h = No effect 1h = Clear mask of the corresponding DMA DONE IRQ
10	MCASPRD	R/W	0h	MCASP_RD_DMA_DONE_INT_MASK_CLR 0h = No effect 1h = Clear mask of the corresponding DMA DONE IRQ
9	CAMEMPT	R/W	0h	CAM_FIFO_EMPTY_DMA_DONE_INT_MASK_CLR 0h = No effect 1h = Clear mask of the corresponding DMA DONE IRQ
8	CAMFULL	R/W	0h	CAM_THRESHHOLD_DMA_DONE_INT_MASK_CLR 0h = No effect 1h = Clear mask of the corresponding DMA DONE IRQ
7-4	RESERVED	R	X	
3	APSPIWR	R/W	0h	APPS_SPI_WR_DMA_DONE_INT_MASK_CLR 0h = No effect 1h = Clear mask of the corresponding DMA DONE IRQ
2	APSPIRD	R/W	0h	APPS_SPI_RD_DMA_DONE_INT_MASK_CLR 0h = No effect 1h = Clear mask of the corresponding DMA DONE IRQ
1	SDIOMWR	R/W	0h	SDIOM_WR_DMA_DONE_INT_MASK_CLR 0h = No effect 1h = Clear mask of the corresponding DMA DONE IRQ

Copyright © 2017, Texas Instruments Incorporated

Table B-4. DMA_IMC Register Field Descriptions (continued)

Bit	Field	Type	Reset	Description
0	SDIOMRD	R/W	0h	SDIOM_RD_DMA_DONE_INT_MASK_CLR 0h = No effect 1h = Clear mask of the corresponding DMA DONE IRQ

Copyright © 2017, Texas Instruments Incorporated

B.1.4 DMA_ICR Register (offset = 9Ch) [reset = 0h]

Register mask: FF0Fh

DMA_ICR is shown in Figure B-4 and described in Table B-5.

Figure B-4. DMA_ICR Register

31	30	29	28	27	26	25	24
RESERVED							
R-X							
23	22	21	20	19	18	17	16
RESERVED							
R-X							
15	14	13	12	11	10	9	8
ADCWR				MCASPWR	MCASPRD	CAMEMPT	CAMFULL
R/W-0h				R/W-0h	R/W-0h	R/W-0h	R/W-0h
7	6	5	4	3	2	1	0
RESERVED				APSPIWR	APSPIRD	SDIOMWR	SDIOMRD
R-X				R/W-0h	R/W-0h	R/W-0h	R/W-0h

Table B-5. DMA_ICR Register Field Descriptions

Bit	Field	Type	Reset	Description
31-16	RESERVED	R	X	
15-12	ADCWR	R/W	0h	ADC_WR_DMA_DONE_INT_ACK bit 15: ADC channel 6 DMA Done IRQ bit 14: ADC channel 4 DMA Done IRQ bit 13: ADC channel 2 DMA Done IRQ bit 12: ADC channel 0 DMA Done IRQ 0h = No effect 1h = Clear corresponding interrupt
11	MCASPWR	R/W	0h	MCASP_WR_DMA_DONE_INT_ACK 0h = No effect 1h = Clear corresponding interrupt
10	MCASPRD	R/W	0h	MCASP_RD_DMA_DONE_INT_ACK 0h = No effect 1h = Clear corresponding interrupt
9	CAMEMPT	R/W	0h	CAM_FIFO_EMPTY_DMA_DONE_INT_ACK 0h = No effect 1h = Clear corresponding interrupt
8	CAMFULL	R/W	0h	CAM_THRESHHOLD_DMA_DONE_INT_ACK 0h = No effect 1h = Clear corresponding interrupt
7-4	RESERVED	R	X	
3	APSPIWR	R/W	0h	APPS_SPI_WR_DMA_DONE_INT_ACK 0h = No effect 1h = Clear corresponding interrupt
2	APSPIRD	R/W	0h	APPS_SPI_RD_DMA_DONE_INT_ACK 0h = No effect 1h = Clear corresponding interrupt
1	SDIOMWR	R/W	0h	SDIOM_WR_DMA_DONE_INT_ACK 0h = No effect 1h = Clear corresponding interrupt

Copyright © 2017, Texas Instruments Incorporated

Table B-5. DMA_ICR Register Field Descriptions (continued)

Bit	Field	Type	Reset	Description
0	SDIOMRD	R/W	0h	SDIOM_RD_DMA_DONE_INT_ACK 0h = No effect 1h = Clear corresponding interrupt

Copyright © 2017, Texas Instruments Incorporated

B.1.5 DMA_MIS Register (offset = A0h) [reset = 0h]

Register mask: FF0Fh

DMA_MIS is shown in Figure B-5 and described in Table B-6.

Figure B-5. DMA_MIS Register

31	30	29	28	27	26	25	24
RESERVED							
R-X							
23	22	21	20	19	18	17	16
RESERVED							
R-X							
15	14	13	12	11	10	9	8
ADCWR				MCASPWR	MCASPRD	CAMEMPT	CAMFULL
R/W-0h				R/W-0h	R/W-0h	R/W-0h	R/W-0h
7	6	5	4	3	2	1	0
RESERVED				APSPIWR	APSPIRD	SDIOMWR	SDIOMRD
R-X				R/W-0h	R/W-0h	R/W-0h	R/W-0h

Table B-6. DMA_MIS Register Field Descriptions

Bit	Field	Type	Reset	Description
31-16	RESERVED	R	X	
15-12	ADCWR	R/W	0h	ADC_WR_DMA_DONE_INT_STS_MASKED bit 15: ADC channel 6 DMA Done IRQ bit 14: ADC channel 4 DMA Done IRQ bit 13: ADC channel 2 DMA Done IRQ bit 12: ADC channel 0 DMA Done IRQ 0h = Corresponding interrupt is inactive or masked by DMA_DONE_INT mask. 1h = Corresponding interrupt is active and not masked. Read is non-destructive.
11	MCASPWR	R/W	0h	MCASP_WR_DMA_DONE_INT_STS_MASKED 0h = Corresponding interrupt is inactive or masked by DMA_DONE_INT mask. 1h = Corresponding interrupt is active and not masked. Read is non-destructive.
10	MCASPRD	R/W	0h	MCASP_RD_DMA_DONE_INT_STS_MASKED 0h = Corresponding interrupt is inactive or masked by DMA_DONE_INT mask. 1h = Corresponding interrupt is active and not masked. Read is non-destructive.
9	CAMEMPT	R/W	0h	CAM_FIFO_EMPTY_DMA_DONE_INT_STS_MASKED 0h = Corresponding interrupt is inactive or masked by DMA_DONE_INT mask. 1h = Corresponding interrupt is active and not masked. Read is non-destructive.
8	CAMFULL	R/W	0h	CAM_THRESHHOLD_DMA_DONE_INT_STS_MASKED 0h = Corresponding interrupt is inactive or masked by DMA_DONE_INT mask. 1h = Corresponding interrupt is active and not masked. Read is non-destructive.
7-4	RESERVED	R	X	

Copyright © 2017, Texas Instruments Incorporated

Table B-6. DMA_MIS Register Field Descriptions (continued)

Bit	Field	Type	Reset	Description
3	APSPIWR	R/W	0h	APPS_SPI_WR_DMA_DONE_INT_STS_MASKED 0h = Corresponding interrupt is inactive or masked by DMA_DONE_INT mask. 1h = Corresponding interrupt is active and not masked. Read is non-destructive.
2	APSPIRD	R/W	0h	APPS_SPI_RD_DMA_DONE_INT_STS_MASKED 0h = Corresponding interrupt is inactive or masked by DMA_DONE_INT mask. 1h = Corresponding interrupt is active and not masked. Read is non-destructive.
1	SDIOMWR	R/W	0h	SDIOM_WR_DMA_DONE_INT_STS_MASKED 0h = Corresponding interrupt is inactive or masked by DMA_DONE_INT mask. 1h = Corresponding interrupt is active and not masked. Read is non-destructive.
0	SDIOMRD	R/W	0h	SDIOM_RD_DMA_DONE_INT_STS_MASKED 0h = Corresponding interrupt is inactive or masked by DMA_DONE_INT mask. 1h = Corresponding interrupt is active and not masked. Read is non-destructive.

Copyright © 2017, Texas Instruments Incorporated

B.1.6 DMA_RIS Register (offset = A4h) [reset = 0h]

Register mask: FF0Fh

DMA_RIS is shown in Figure B-6 and described in Table B-7.

Figure B-6. DMA_RIS Register

31	30	29	28	27	26	25	24
RESERVED							
R-X							
23	22	21	20	19	18	17	16
RESERVED							
R-X							
15	14	13	12	11	10	9	8
ADCWR				MCASPWR	MCASPRD	CAMEMPT	CAMFULL
R/W-0h				R/W-0h	R/W-0h	R/W-0h	R/W-0h
7	6	5	4	3	2	1	0
RESERVED				APSPIWR	APSPIRD	SDIOMWR	SDIOMRD
R-X				R/W-0h	R/W-0h	R/W-0h	R/W-0h

Table B-7. DMA_RIS Register Field Descriptions

Bit	Field	Type	Reset	Description
31-16	RESERVED	R	X	
15-12	ADCWR	R/W	0h	ADC_WR_DMA_DONE_INT_STS_RAW bit 15: ADC channel 6 DMA Done IRQ bit 14: ADC channel 4 DMA Done IRQ bit 13: ADC channel 2 DMA Done IRQ bit 12: ADC channel 0 DMA Done IRQ 0h = Corresponding interrupt is inactive. 1h = Corresponding interrupt is active. Read is non-destructive.
11	MCASPWR	R/W	0h	MCASP_WR_DMA_DONE_INT_STS_RAW 0h = Corresponding interrupt is inactive. 1h = Corresponding interrupt is active. Read is non-destructive.
10	MCASPRD	R/W	0h	MCASP_RD_DMA_DONE_INT_STS_RAW 0h = Corresponding interrupt is inactive. 1h = Corresponding interrupt is active. Read is non-destructive.
9	CAMEMPT	R/W	0h	CAM_FIFO_EMPTY_DMA_DONE_INT_STS_RAW 0h = Corresponding interrupt is inactive. 1h = Corresponding interrupt is active. Read is non-destructive.
8	CAMFULL	R/W	0h	CAM_THRESHHOLD_DMA_DONE_INT_STS_RAW 0h = Corresponding interrupt is inactive. 1h = Corresponding interrupt is active. Read is non-destructive.
7-4	RESERVED	R	X	
3	APSPIWR	R/W	0h	APPS_SPI_WR_DMA_DONE_INT_STS_RAW 0h = Corresponding interrupt is inactive. 1h = Corresponding interrupt is active. Read is non-destructive.
2	APSPIRD	R/W	0h	APPS_SPI_RD_DMA_DONE_INT_STS_RAW 0h = Corresponding interrupt is inactive. 1h = Corresponding interrupt is active. Read is non-destructive.
1	SDIOMWR	R/W	0h	SDIOM_WR_DMA_DONE_INT_STS_RAW 0h = Corresponding interrupt is inactive. 1h = Corresponding interrupt is active. Read is non-destructive.

Copyright © 2017, Texas Instruments Incorporated

Table B-7. DMA_RIS Register Field Descriptions (continued)

Bit	Field	Type	Reset	Description
0	SDIOMRD	R/W	0h	SDIOM_RD_DMA_DONE_INT_STS_RAW 0h = Corresponding interrupt is inactive. 1h = Corresponding interrupt is active. Read is non-destructive.

Copyright © 2017, Texas Instruments Incorporated

B.1.7 GPTTRIGSEL Register (offset = B0h) [reset = 0h]

GPTTRIGSEL is shown in Figure B-7 and described in Table B-8.

Figure B-7. GPTTRIGSEL Register

31	30	29	28	27	26	25	24	23	22	21	20	19	18	17	16	15	14	13	12	11	10	9	8	7	6	5	4	3	2	1	0
RESERVED																								GT_CCPx_TRIG_EN							
R-X																								R/W-0h							

Table B-8. GPTTRIGSEL Register Field Descriptions

Bit	Field	Type	Reset	Description
31-8	RESERVED	R	X	Software should not rely on the value of a reserved bit. To provide compatibility with future products, the value of a reserved bit should be preserved across a read-modify-write operation.
7-0	GT_CCP[7-0]_TRIG_EN	R/W	0h	External trigger on GT_CCP[7-0] 0h = Disabled 1h = Enabled

Copyright © 2017, Texas Instruments Incorporated

IMPORTANT NOTICE FOR TI DESIGN INFORMATION AND RESOURCES

Texas Instruments Incorporated ('TI") technical, application or other design advice, services or information, including, but not limited to, reference designs and materials relating to evaluation modules, (collectively, "TI Resources") are intended to assist designers who are developing applications that incorporate TI products; by downloading, accessing or using any particular TI Resource in any way, you (individually or, if you are acting on behalf of a company, your company) agree to use it solely for this purpose and subject to the terms of this Notice.

TI's provision of TI Resources does not expand or otherwise alter TI's applicable published warranties or warranty disclaimers for TI products, and no additional obligations or liabilities arise from TI providing such TI Resources. TI reserves the right to make corrections, enhancements, improvements and other changes to its TI Resources.

You understand and agree that you remain responsible for using your independent analysis, evaluation and judgment in designing your applications and that you have full and exclusive responsibility to assure the safety of your applications and compliance of your applications (and of all TI products used in or for your applications) with all applicable regulations, laws and other applicable requirements. You represent that, with respect to your applications, you have all the necessary expertise to create and implement safeguards that (1) anticipate dangerous consequences of failures, (2) monitor failures and their consequences, and (3) lessen the likelihood of failures that might cause harm and take appropriate actions. You agree that prior to using or distributing any applications that include TI products, you will thoroughly test such applications and the functionality of such TI products as used in such applications. TI has not conducted any testing other than that specifically described in the published documentation for a particular TI Resource.

You are authorized to use, copy and modify any individual TI Resource only in connection with the development of applications that include the TI product(s) identified in such TI Resource. NO OTHER LICENSE, EXPRESS OR IMPLIED, BY ESTOPPEL OR OTHERWISE TO ANY OTHER TI INTELLECTUAL PROPERTY RIGHT, AND NO LICENSE TO ANY TECHNOLOGY OR INTELLECTUAL PROPERTY RIGHT OF TI OR ANY THIRD PARTY IS GRANTED HEREIN, including but not limited to any patent right, copyright, mask work right, or other intellectual property right relating to any combination, machine, or process in which TI products or services are used. Information regarding or referencing third-party products or services does not constitute a license to use such products or services, or a warranty or endorsement thereof. Use of TI Resources may require a license from a third party under the patents or other intellectual property of the third party, or a license from TI under the patents or other intellectual property of TI.

TI RESOURCES ARE PROVIDED "AS IS" AND WITH ALL FAULTS. TI DISCLAIMS ALL OTHER WARRANTIES OR REPRESENTATIONS, EXPRESS OR IMPLIED, REGARDING TI RESOURCES OR USE THEREOF, INCLUDING BUT NOT LIMITED TO ACCURACY OR COMPLETENESS, TITLE, ANY EPIDEMIC FAILURE WARRANTY AND ANY IMPLIED WARRANTIES OF MERCHANTABILITY, FITNESS FOR A PARTICULAR PURPOSE, AND NON-INFRINGEMENT OF ANY THIRD PARTY INTELLECTUAL PROPERTY RIGHTS.

TI SHALL NOT BE LIABLE FOR AND SHALL NOT DEFEND OR INDEMNIFY YOU AGAINST ANY CLAIM, INCLUDING BUT NOT LIMITED TO ANY INFRINGEMENT CLAIM THAT RELATES TO OR IS BASED ON ANY COMBINATION OF PRODUCTS EVEN IF DESCRIBED IN TI RESOURCES OR OTHERWISE. IN NO EVENT SHALL TI BE LIABLE FOR ANY ACTUAL, DIRECT, SPECIAL, COLLATERAL, INDIRECT, PUNITIVE, INCIDENTAL, CONSEQUENTIAL OR EXEMPLARY DAMAGES IN CONNECTION WITH OR ARISING OUT OF TI RESOURCES OR USE THEREOF, AND REGARDLESS OF WHETHER TI HAS BEEN ADVISED OF THE POSSIBILITY OF SUCH DAMAGES.

You agree to fully indemnify TI and its representatives against any damages, costs, losses, and/or liabilities arising out of your non-compliance with the terms and provisions of this Notice.

This Notice applies to TI Resources. Additional terms apply to the use and purchase of certain types of materials, TI products and services. These include; without limitation, TI's standard terms for semiconductor products http://www.ti.com/sc/docs/stdterms.htm), evaluation modules, and samples (http://www.ti.com/sc/docs/sampterms.htm).

Mailing Address: Texas Instruments, Post Office Box 655303, Dallas, Texas 75265
Copyright © 2017, Texas Instruments Incorporated