CC3135MOD SimpleLink™ Wi-Fi CERTIFIED™ Dual-Band Network Processor Module Solution for MCU Applications

1 Module Overview

1.1 Features

- Fully Integrated and Green/RoHS Module Includes All Required Clocks, Serial Peripheral Interface (SPI) Flash, and Passives.
- Integrated Wi-Fi® and internet protocols
- 802.11 a/b/g/n: 2.4 GHz and 5 GHz
- FCC, IC/ISED, ETSI/CE, and MIC Certified
- FIPS 140-2 Level 1 Validated IC Inside
- Rich set of IoT security features helps developers protect data
- Low-Power Modes for battery powered application
- Coexistence with 2.4 GHz Radios® low energy radio
- Industrial Temperature: –40°C to +85°C
- Wi-Fi network processor subsystem:
  - Wi-Fi core:
    - 802.11 a/b/g/n 2.4 GHz and 5 GHz
    - Modes:
      - Access Point (AP)
      - Station (STA)
      - Wi-Fi Direct® (only supported on 2.4 GHz)
    - Security:
      - WEP
      - WPA™/ WPA2™ PSK
      - WPA2 Enterprise
  - Internet and application protocols:
    - HTTPs server, mDNS, DNS-SD, DHCP
    - IPv4 and IPv6 TCP/IP stack
    - 16 BSD sockets (fully secured TLS v1.2 and SSL 3.0)
  - Built-in power management subsystem:
    - Configurable low-power profiles (always, intermittent, tag)
    - Advanced low-power modes
    - Integrated DC/DC regulators
- Application Throughput
  - UDP: 16 Mbps
  - TCP: 13 Mbps
- Multilayered Security Features:
  - Separate execution environments
  - Networking security
    - Device identity and key
    - Hardware accelerator cryptographic engines (AES, DES, SHA/MD5, CRC)
    - Application-level security (encryption, authentication, access control)
    - Initial secure programming
    - Software tamper detection
    - Secure boot
    - Certificate signing request (CSR)
    - Unique per device key pair
- Recovery Mechanism – Ability to Recover to Factory Defaults
- Power-Management Subsystem:
  - Integrated DC/DC converters support a wide range of supply voltage:
    - VBAT wide-voltage mode: 2.3 V to 3.6 V
    - VIO is always tied with VBAT
  - Advanced low-power modes:
    - Shutdown: 1 µA, hibernate: 5 µA
    - Low-power deep sleep (LPDS): 115 µA
    - Idle connected (MCU in LPDS): 710 µA
    - RX traffic (MCU active): 53 mA
    - TX traffic (MCU active): 223 mA
- Wi-Fi TX Power
  - 2.4 GHz: 16.5 dBm at 1 DSSS
  - 5 GHz: 14.5 dBm at 6 OFDM
- Wi-Fi RX Sensitivity
  - 2.4 GHz: –94.5 dBm at 1 DSSS
  - 5 GHz: –89 dBm at 6 OFDM
- Additional Integrated Components on Module
  - 40.0 MHz Crystal With Internal Oscillator
  - 32.768 kHz Crystal (RTC)
  - 32 Mbit SPI Serial Flash
  - RF Filters, Diplexer, and Passive Components
- QFM Package
  - 1.27-mm Pitch, 63-Pin, 20.5-mm × 17.5-mm QFM Package for Easy Assembly and Low-Cost PCB Design
- Module Supports SimpleLink Developers Ecosystem

ADVANCE INFORMATION

An IMPORTANT NOTICE at the end of this data sheet addresses availability, warranty, changes, use in safety-critical applications, intellectual property matters and other important disclaimers. ADVANCE INFORMATION for pre-production products; subject to change without notice.

1.2 Applications

- For Internet of Things applications, such as:
  - Building and Home Automation:
    - HVAC Systems & Thermostat
    - Video Surveillance, Video Doorbells, and Low-Power Camera
    - Building Security Systems & E-locks
  - Appliances
  - Asset Tracking
  - Factory Automation
  - Medical and Healthcare
  - Grid Infrastructure

1.3 Description

The CC3135MOD is an FCC, IC/ISED, ETSI/CE, MIC, and Wi-Fi CERTIFIED™ module that dramatically simplifies the implementation of Internet connectivity. This dual band Wi-Fi® network processor module can be added to any low-cost, low-power microcontroller unit (MCU); it integrates all protocols for Wi-Fi® and Internet, which greatly minimize host MCU software requirements.

This ROM-based subsystem includes an 802.11 a/b/g/n Dual-Band 2.4 GHz and 5 GHz radio, baseband, and MAC with powerful hardware cryptographic engine. With built-in security protocols, the CC3135MOD solution provides a robust and simple security experience. The CC3135MOD is available in an LGA package that is easy to lay out with all required components including serial Flash, RF filters, diplexer, crystal, and passive components that are fully integrated.

This generation introduces new capabilities that further simplify the connectivity of things to the Internet. The main new features of CC3135MOD include:

- 802.11 a/b/g/n: 2.4 GHz and 5 GHz support
- 2.4 GHz Coexistence with Bluetooth® low energy radio
- Antenna diversity
- Enhanced security with FIPS 140-2 level 1 validated IC inside: certification
- More concurrent secure sockets, up to 16
- Unique device identifier with ability to generate certificate signing request (CSR)
- Online certificate status protocol (OCSP)
- Wi-Fi Alliance® cetified for IoT low power capabilities
- Hostless mode for offloading template packet transmissions
- Improved fast scan

The CC3235MODx device family is part of the SimpleLink™ MCU platform—a common, easy-to-use development environment based on a single-core software development kit (SDK) with a rich tool set and reference designs. The E2E™ community supports Wi-Fi®, *Bluetooth*® low energy, Sub-1 GHz, and host MCUs. For more information, visit www.ti.com/SimpleLink.

Table 1-1. Module Information(1)

PART NUMBER	PACKAGE	BODY SIZE
CC3135MODRNMMOBR	QFM (63)	20.5 mm × 17.5 mm

(1) For more information, see Section 9.

ADVANCE INFORMATION

Copyright © 2019, Texas Instruments Incorporated

1.4 Functional Block Diagrams

Figure 1-1 shows the functional block diagram of the CC3135MOD module.

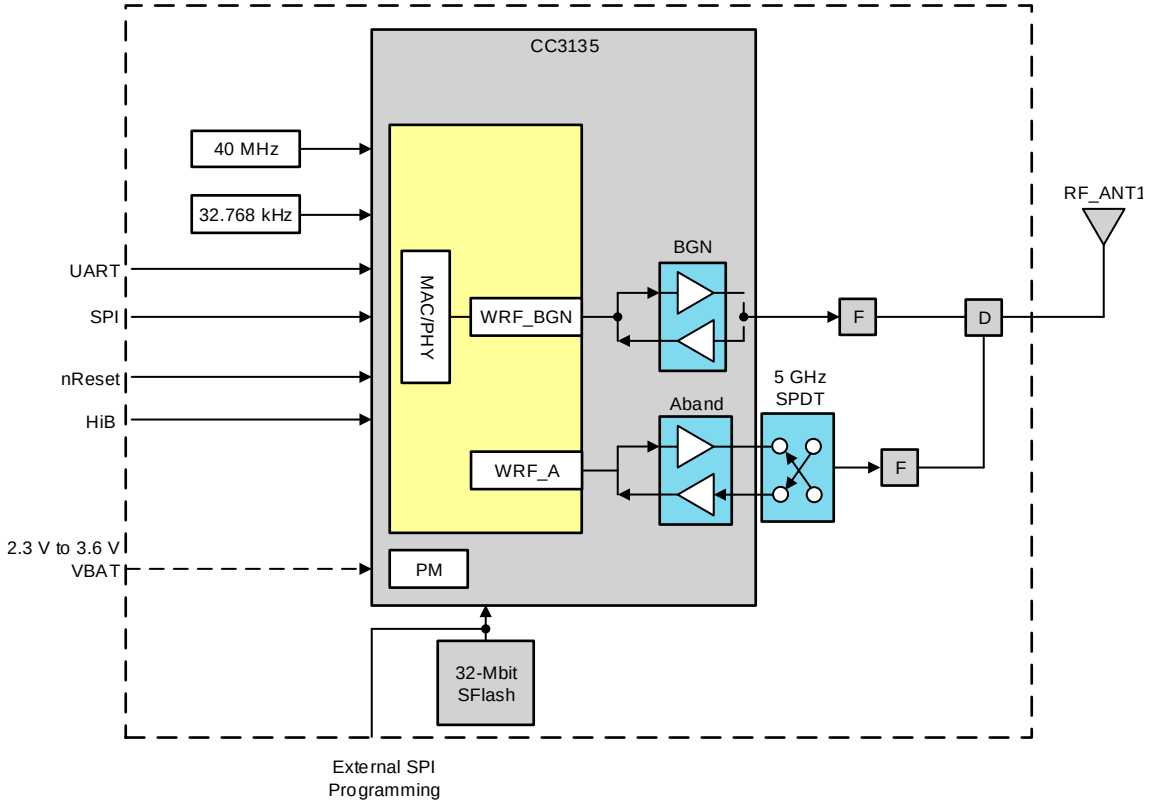

Figure 1-1. CC3135MOD Module Functional Block Diagram

ADVANCE INFORMATION

ADVANCE INFORMATION

Figure 1-2 shows the CC3135 hardware overview.

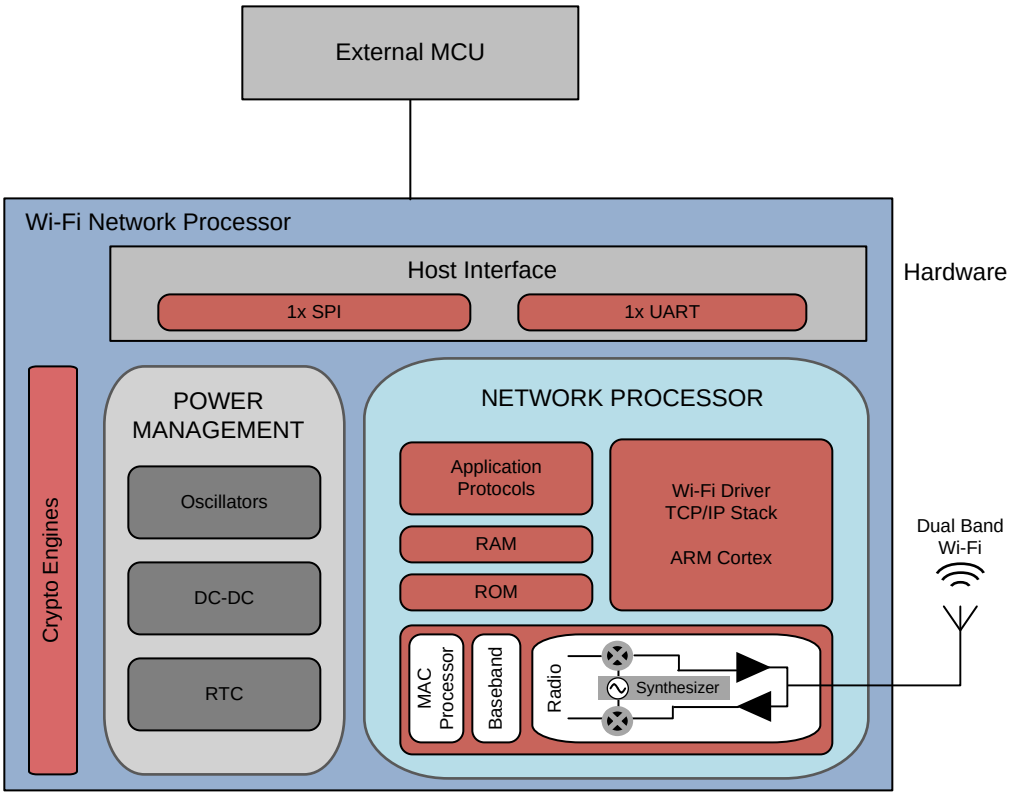

Figure 1-2. CC3135 Hardware Overview

Figure 1-3 shows an overview of the CC3135 embedded software.

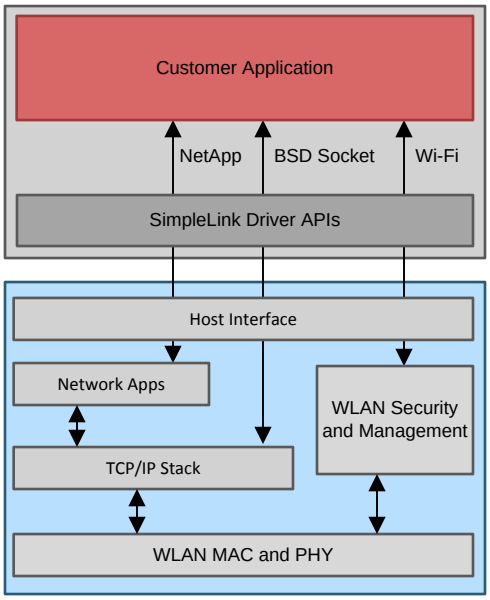

Copyright © 2017, Texas Instruments Incorporated

Figure 1-3. CC3135 Embedded Software Overview

Copyright © 2019, Texas Instruments Incorporated

Table of Contents

1 Module Overview 1
1.1 Features 1
1.2 Applications 2
1.3 Description 2
1.4 Functional Block Diagrams 3
2 Device Comparison 6
2.1 Related Products 7
3 Terminal Configuration and Functions 8
3.1 CC3135MOD Pin Diagram 8
3.2 Pin Attributes 9
3.3 Signal Descriptions 13
3.4 Connections for Unused Pins 14
4 Specifications 15
4.1 Absolute Maximum Ratings 15
4.2 ESD Ratings 15
4.3 Recommended Operating Conditions 15
4.4 Current Consumption Summary: 2.4 GHz RF Band 16
4.5 Current Consumption Summary: 5 GHz RF Band 16
4.6 TX Power Control for 2.4 GHz Band 17
4.7 TX Power Control for 5 GHz Band 18
4.8 Brownout and Blackout Conditions 20
4.9 Electrical Characteristics for DIO Pins 21
4.10 WLAN Receiver Characteristics 22
4.11 WLAN Transmitter Characteristics 22
4.12 BLE and WLAN Coexistence Requirements 23
4.13 Reset Requirement 23
4.14 Thermal Resistance Characteristics for MOB Package 23
4.15 Timing and Switching Characteristics 24
4.16 External Interfaces 26
5 Detailed Description 30
5.1 Overview 30
5.2 Module Features 30
5.3 Power-Management Subsystem 34
5.4 Low-Power Operating Modes 34
5.5 Restoring Factory Default Configuration 36
5.6 Hostless Mode 36
5.7 Device Certification and Qualification 37
5.8 Module Markings 38
5.9 End Product Labeling 39
5.10 Manual Information to the End User 39
6 Applications, Implementation, and Layout 40
6.1 Application Information 41
6.2 PCB Layout Guidelines 43
7 Environmental Requirements and Specifications 49
7.1 Temperature 49
7.2 Handling Environment 49
7.3 Storage Condition 49
7.4 Baking Conditions 49
7.5 Soldering and Reflow Condition 50
8 Device and Documentation Support 51
8.1 Device Nomenclature 51
8.2 Development Tools and Software 51
8.3 Firmware Updates 52
8.4 Documentation Support 52
8.5 Trademarks 54
8.6 Electrostatic Discharge Caution 54
8.7 Export Control Notice 54
8.8 Glossary 54
9 Mechanical, Packaging, and Orderable Information 55
9.1 Mechanical, Land, and Solder Paste Drawings 55
9.2 Package Option Addendum 56

ADVANCE INFORMATION

Copyright © 2019, Texas Instruments Incorporated

ADVANCE INFORMATION

2 Device Comparison

Table 2-1 shows the features supported across different CC3x35 modules.

Table 2-1. Device Features Comparison

FEATURE	DEVICE		
	CC3135MOD	**CC3235MODS**	**CC3235MODSF**
Onboard Chip	CC3135	CC3235S	CC3235SF
Onboard ANT	No	No	No
sFlash	32-Mbit	32-Mbit	32-Mbit
Regulatory Certification	FCC, IC/ISED, ETSI/CE, MIC	FCC, IC/ISED, ETSI/CE, MIC	FCC, IC/ISED, ETSI/CE, MIC
Wi-Fi Alliance Certification	Yes	Yes	Yes
Input Voltage	2.3 V to 3.6 V	2.3 V to 3.6 V	2.3 V to 3.6 V
Package	17.5 mm × 20.5 mm LGA	17.5 mm × 20.5 mm LGA	17.5 mm × 20.5 mm LGA
Operating Temperature Range	–40° to 85°C	–40° to 85°C	–40° to 85°C
Classification	Wi-Fi Network Processor	Wireless Microcontroller	Wireless Microcontroller
Standard	802.11 a/b/g/n	802.11 a/b/g/n	802.11 a/b/g/n
Frequency	2.4 GHz, 5 GHz	2.4 GHz, 5 GHz	2.4 GHz, 5 GHz
TCP / IP Stack	IPv4, IPv6	IPv4, IPv6	IPv4, IPv6
Sockets	16	16	16
Integrated MCU	-	Arm® Cortex®-M4 at 80 MHz	Arm® Cortex®-M4 at 80 MHz
On Chip Memory			
RAM	-	256KB	256KB
Flash	-	-	1MB
Peripherals and Interfaces			
Universal Asynchronous Receiver and Transmitter (UART)	1	2	2
Serial Port Interface (SPI)	1	1	1
Multi-Channel Audio Serial Port (McASP)- I2S or PCM	-	2-ch	2-ch
Inter-Integrated Circuit (I^2C)	-	1	1
Analog to Digital Converter (ADC)	-	4-ch, 12-bit	4-ch, 12-bit
Parallel Interface (8-bit PI)	-	1	1
General Purposes Timers	-	4	4
Multimedia Card (MMC / SD)	-	1	1
Security Features			
Wi-Fi Level of Security	WEP, WPS, WPA / WPA2, PSK WPA2 (802.1x)	WEP, WPS, WPA / WPA2, PSK WPA2 (802.1x)	WEP, WPS, WPA / WPA2, PSK WPA2 (802.1x)
Secure Sockets (SSL v3 or TLS 1.0 /1.1/ 1.2)	6	6	6
Additional Networking Security	Unique Device Identity Trusted Root-Certificate Catalog TI Root-of-Trust Public key	Unique Device Identity Trusted Root-Certificate Catalog TI Root-of-Trust Public key	Unique Device Identity Trusted Root-Certificate Catalog TI Root-of-Trust Public key
Hardware Acceleration	Hardware Crypto Engines	Hardware Crypto Engines	Hardware Crypto Engines
Secure Boot	-	Yes	Yes
Enhanced Application Level Security	-	File system security Secure key storage Software tamper detection Cloning protection Initial secure programming	File system security Secure key storage Software tamper detection Cloning protection Initial secure programming
FIPS 140-2 Level 1 Certification	Yes	Yes	Yes

Copyright © 2019, Texas Instruments Incorporated

2.1 Related Products

For information about other devices in this family of products or related products see the links below.

The SimpleLink™ MCU Portfolio Offers a single development environment that delivers flexible hardware, software, and tool options for customers developing wired and wireless applications. With 100% code reuse across host MCUs, Wi-Fi, Bluetooth low energy, Sub-1 GHz devices and more, choose the MCU or connectivity standard that fits your design. A one-time investment with the SimpleLink software development kit (SDK) allows you to reuse often, opening the door to create unlimited applications. For more information, visit www.ti.com/simplelink.

SimpleLink™ Wi-Fi® Family Offers several Internet-on-a chip solutions, which address the need of battery operated, security enabled products. Texas Instruments offers a single chip wireless microcontroller and a wireless network processor which can be paired with any MCU, to allow developers to design new Wi-Fi products, or upgrade existing products with Wi-Fi capabilities. For more information, visit www.ti.com/simplelinkwifi.

MSP432™ Host MCU The MSP432P401R MCU features the Arm® Cortex®-M4 processor offering ample processing capability with floating point unit and memory footprint for advanced processing algorithm, communication protocols as well as application needs, while incorporating a 14-bit 1-msps ADC14 that provides a flexible and low-power analog with best-in-class performance to enable developers to add differentiated sensing and measurement capabilities to their Wi-Fi applications. For more information, visit www.ti.com/product/MSP432P401R.

Reference Designs for CC3135 and CC3235 Modules The TI Designs Reference Design Library is a robust reference design library spanning analog, embedded processor, and connectivity. Created by TI experts to help you jump start your system design, all TI Designs include schematic or block diagrams, BOMs, and design files to speed your time to market. Search and download designs at www.ti.com/tidesigns.

CC3135 SDK Plug In The CC3135 SDK Plug In contains drivers, many sample applications for Wi-Fi features and Internet, and documentation needed to use the CC3135 solution. Learn more at http://www.ti.com/tool/simplelink-sdk-wifi-plugin.

ADVANCE INFORMATION

Copyright © 2019, Texas Instruments Incorporated

3 Terminal Configuration and Functions

3.1 CC3135MOD Pin Diagram

Figure 3-1 shows the pin diagram for the CC3135MOD module.

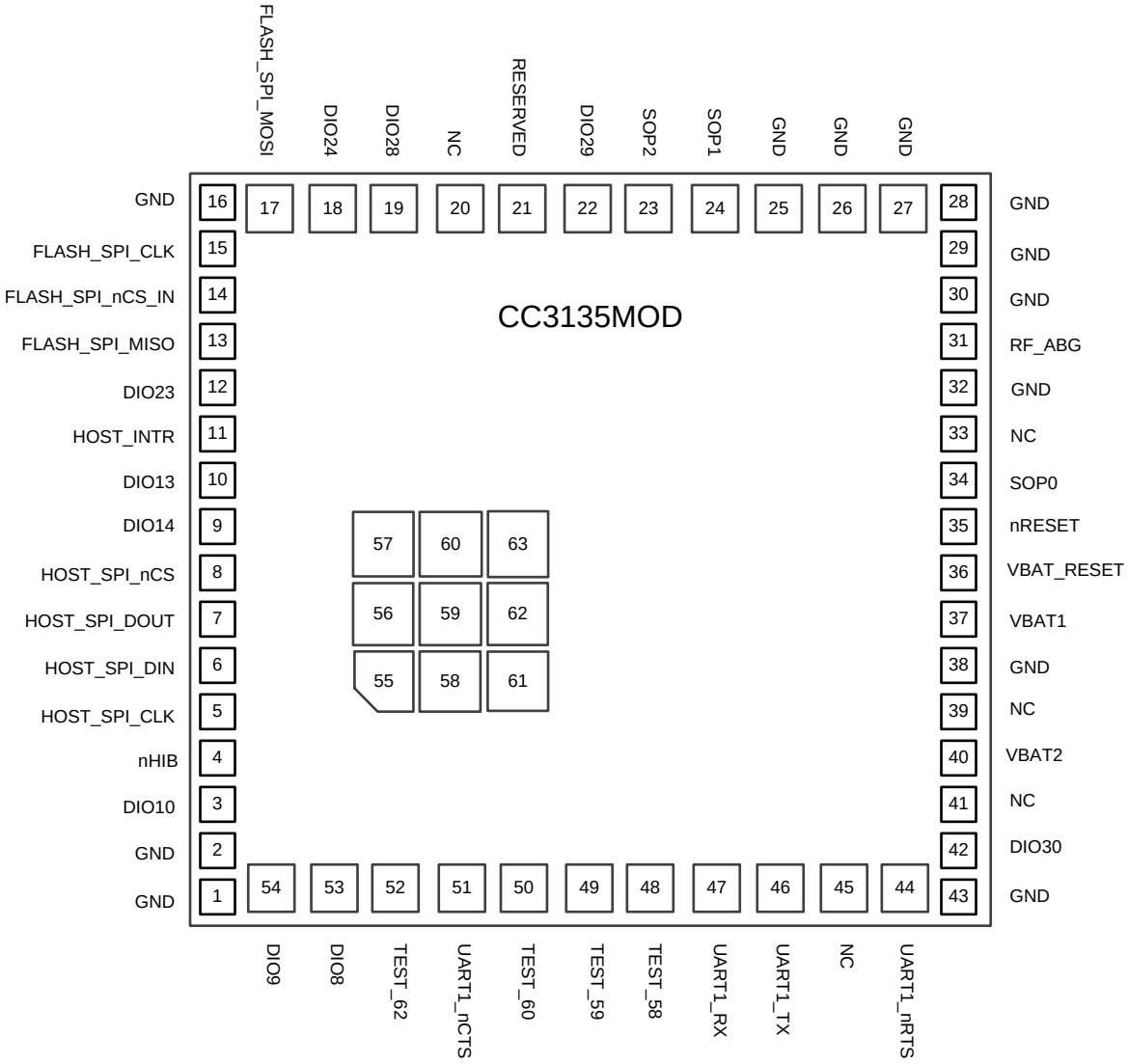

Figure 3-1. CC3135MOD Pin Diagram Bottom View

ADVANCE INFORMATION

Copyright © 2019, Texas Instruments Incorporated

3.2 Pin Attributes

Table 3-1 describes the CC3135MOD pins.

NOTE

Digital IOs on the CC3135MOD refer to hostless mode, BLE/2.4 GHz coexistence, and antenna select IOs, not general-purpose IOs.

If an external device drives a positive voltage to signal pads when the CC3135MOD is not powered, DC current is drawn from the other device. If the drive strength of the external device is adequate, an unintentional wakeup and boot of the CC3135MOD device can occur. To prevent current draw, TI recommends one of the following:

- All devices interfaced to the CC3135MOD must be powered from the same power rail as the CC3135MOD device.
- Use level shifters between the CC3135MOD and any external devices fed from other independent rails.
- The nRESET pin of the CC3135MOD device must be held low until the V_{BAT} supply to the device is driven and stable.

ADVANCE INFORMATION

Copyright © 2019, Texas Instruments Incorporated

ADVANCE INFORMATION

Table 3-1. Pin Description and Attributes

PIN	DEFAULT FUNCTION	DIGITAL I/O			STATE AT RESET AND HIBERNATE	I/O TYPE(1)	CC3135 DEVICE PIN NO.	DESCRIPTION
		HOSTLESS MODE	BLE COEX					
			CC_COEX_ OUT	CC_COEX_ IN				
1	GND	N/A	N/A	N/A	–	Power	-	GND
2	GND	N/A	N/A	N/A	–	Power	-	GND
3	DIO10	Y	Y	Y	–	I/O	1	Digital input or output
4	nHIB	-	-	-	Hi-Z	I	2	Hibernate signal input to the NWP subsystem (active low). This is connected to the MCU GPIO. If the GPIO from the MCU can float while the MCU enters low power, consider adding a pullup resistor on the board to avoid floating.
5	HOST_SPI_CLK	-	-	-	Hi-Z	I	5	Host interface SPI clock
6	HOST_SPI_MOSI	-	-	-	Hi-Z	I	6	Host interface SPI data input
7	HOST_SPI_MISO	-	-	-	Hi-Z	O	7	Host interface SPI data output
8	HOST_SPI_nCS	-	-	-	Hi-Z	I	8	Host interface SPI chip select (active low)
9	DIO12	Y	Y	Y	–	O	3	Digital input or output
10	DIO13	Y	Y	Y	–	–	4	Digital input or output
11	HOST_INTR	-	-	-	Hi-Z	O	15	Interrupt output (active high)
12	DIO23	Y	Y	Y	Hi-Z		16	Digital input or output
13	FLASH _SPI_MISO	N/A	N/A	N/A	Hi-Z	I	-	External Serial Flash Programming: SPI data in
14	FLASH _SPI_CS	N/A	N/A	N/A	Hi-Z	O	-	External Serial Flash Programming: SPI chip select (active low)
15	FLASH_SPI_CLK	N/A	N/A	N/A	Hi-Z	O	-	External Serial Flash Programming: SPI clock
16	GND	N/A	N/A	N/A	–	Power	-	Ground
17	FLASH_SPI_MOSI	N/A	N/A	N/A	Hi-Z	O	-	External Serial Flash Programming: SPI data out
18	DIO24	Y	Y	Y	Hi-Z		17	Digital input or output
19	DIO28	Y	Y	Y	–	–	18	Digital input or output
20	NC	N/A	N/A	N/A	–	–	-	No Connect
21	Reserved	-	-	-	Hi-Z	–	-	No Connect
22	DIO29	Y	Y	Y	Hi-Z		20	Digital input or output
23	SOP2	Y(2)	Y	-	Hi-Z	O	21	Controls restore to default mode.

(1) I = input
O = output
RF = radio frequency
I/O = bidirectional
(2) Output Only

Copyright © 2019, Texas Instruments Incorporated

Table 3-1. Pin Description and Attributes (continued)

PIN	DEFAULT FUNCTION	DIGITAL I/O			STATE AT RESET AND HIBERNATE	I/O TYPE[1]	CC3135 DEVICE PIN NO.	DESCRIPTION
		HOSTLESS MODE	BLE COEX					
			CC_COEX_ OUT	CC_COEX_ IN				
24	SOP1	N/A	N/A	N/A	Hi-Z	–	34	SOP[2:0] used for factory restore. See Section 5.5. SOP1 used for 5 GHz switch control
25	GND	N/A	N/A	N/A	–	Power	-	GND
26	GND	N/A	N/A	N/A	–	Power	-	GND
27	GND	N/A	N/A	N/A	–	Power	-	GND
28	GND	N/A	N/A	N/A	–	Power	-	GND
29	GND	N/A	N/A	N/A	–	Power	-	GND
30	GND	N/A	N/A	N/A	–	Power	-	GND
31	RF_ABG	N/A	N/A	N/A	Hi-Z	RF	27, 28, 31	2.4 GHz & 5 GHz RF TX, RX
32	GND	N/A	N/A	N/A	–	Power	-	GND
33	NC	N/A	N/A	N/A	–	–	-	No Connect
34	SOP0	N/A	N/A	N/A	Hi-Z	–	35	SOP[2:0] used for factory restore. See Section 5.5. SOP0 used for 5GHz switch control
35	nRESET	N/A	N/A	N/A	Hi-Z	I	32	There is an internal 100 kΩ pull-up resistor option from the nRESET pin to VBAT_RESET. Note: VBAT_RESET is not connected to VBAT1 or VBAT2 within the module. The following connection schemes are recommended: • Connect nRESET to a GPIO from the host only if nRESET will be in a defined state under all operating conditions. Leave VBAT_RESET unconnected to save power. • If nRESET cannot be in a defined state under all operating conditions, connect VBAT_RESET to the main module power supply (VBAT1 and VBAT2). Due to the internal pull-up resistor, a leakage current of 3.3 V / 100 kΩ is expected.
36	VBAT_RESET	N/A	N/A	N/A	Hi-Z	-	37	
37	VBAT1	N/A	N/A	N/A	Hi-Z	-	39	Power supply for the module, must be connected to battery (2.3 V to 3.6 V)
38	GND	N/A	N/A	N/A	–	Power	-	GND
39	NC	N/A	N/A	N/A	–	–	-	No Connect
40	VBAT2	N/A	N/A	N/A	Hi-Z	-	10, 44, 54	Power supply for the module, must be connected to battery (2.3 V to 3.6 V)
41	NC	N/A	N/A	N/A	–	–	-	No Connect
42	DIO30	Y	Y	Y	Hi-Z	–	53	Network Scripter I/O

ADVANCE INFORMATION

Copyright © 2019, Texas Instruments Incorporated

ADVANCE INFORMATION

Table 3-1. Pin Description and Attributes (continued)

PIN	DEFAULT FUNCTION	DIGITAL I/O			STATE AT RESET AND HIBERNATE	I/O TYPE[1]	CC3135 DEVICE PIN NO.	DESCRIPTION
		HOSTLESS MODE	BLE COEX					
			CC_COEX_ OUT	CC_COEX_ IN				
43	GND	N/A	N/A	N/A	–	Power	-	GND
44	UART1_nRTS	-	-	-	Hi-Z	O	50	UART interface to host (request to send)
45	NC	N/A	N/A	N/A	–	–	-	No Connect
46	UART1_TX	-	-	-	Hi-Z	O	55	UART interface to host (transmit)
47	UART1_RX	-	-	-	Hi-Z	I	57	UART interface to host (receive)
48	TEST_58	Y	Y	Y	Hi-Z	O	58	Test signal; connect to an external test point.
49	TEST_59	Y	Y	Y	Hi-Z	O	59	Test signal; connect to an external test point.
50	TEST_60	Y	Y	Y	Hi-Z	O	60	Test signal; connect to an external test point.
51	UART1_nCTS	-	-	-	Hi-Z	I	61	UART interface to host (clear to send)
52	TEST_62	-	-	-	Hi-Z	O	62	Test signal; connect to an external test point.
53	DIO8	Y	Y	Y	Hi-Z		63	Digital input or output
54	DIO9	Y	Y	Y	Hi-Z	–	64	Digital input or output

Copyright © 2019, Texas Instruments Incorporated

3.3 Signal Descriptions

Table 3-2. Signal Descriptions

FUNCTION	SIGNAL NAME	PIN NO.	PIN TYPE	SIGNAL DIRECTION	DESCRIPTION
Antenna selection	DIO10	3	I/O	O	Antenna selection control
	DIO12	9	I/O	O	
	DIO13	10	I/O	O	
	DIO23	12	I/O	O	
	DIO24	18	I/O	O	
	DIO28	19(1)	I/O	O	
	DIO29	22	I/O	O	
	DIO25	23	O	O	
	DIO30	42(1)	I/O	O	
	DIO3	48	I/O	O	
	DIO4	49	I/O	O	
	DIO5	50	I/O	O	
	DIO8	53	I/O	O	
	DIO9	54	I/O	O	
BLE/2.4 GHz Radio coexistence(2)	DIO10	3	I/O	I/O	Coexistence inputs and outputs
	DIO12	9	I/O	I/O	
	DIO13	10	I/O	I/O	
	DIO23	12	I/O	I/O	
	DIO24	18	I/O	I/O	
	DIO28	19(1)	I/O	I/O	
	DIO29	22	I/O	I/O	
	DIO30	42(1)	I/O	I/O	
	DIO3	48	I/O	I/O	
	DIO4	49	I/O	I/O	
	DIO5	50	I/O	I/O	
	DIO8	53	I/O	I/O	
	DIO9	54	I/O	I/O	
Hostless Mode	DIO10	3	I/O	I/O	Hostless mode inputs and outputs
	DIO12	9	I/O	I/O	
	DIO13	10	I/O	I/O	
	DIO23	12	I/O	I/O	
	DIO24	18	I/O	I/O	
	DIO28	19(1)	I/O	I/O	
	DIO29	22	I/O	I/O	
	DIO25	23	O	O	
	DIO30	42(1)	I/O	I/O	
	DIO3	48	I/O	I/O	
	DIO4	49	I/O	I/O	
	DIO5	50	I/O	I/O	
	DIO8	53	I/O	I/O	
	DIO9	54	I/O	I/O	

ADVANCE INFORMATION

(1) LPDS retention unavailable.
(2) The CC3135MOD modules are compatible with TI BLE modules using an external RF switch.

Copyright © 2019, Texas Instruments Incorporated

Table 3-2. Signal Descriptions (continued)

FUNCTION	SIGNAL NAME	PIN NO.	PIN TYPE	SIGNAL DIRECTION	DESCRIPTION
HOST SPI	HOST_SPI_CLK	5	I/O	I	Host SPI clock input
	HOST_SPI_MOSI	6	I/O	I	Data from Host
	HOST_SPI_MISO	8	I/O	O	Data to Host
	HOST_SPI_nCS	7	I/O	I	Device select (active low)
FLASH SPI	FLASH_SPI_DIN	13	I	I	External serial Flash interface: SPI data in
	FLASH_SPI_CS	14	O	O	External serial Flash interface: SPI chip select (active low)
	FLASH_SPI_CLK	15	O	O	External serial Flash interface: SPI clock
	FLASH_SPI_MOSI	17	O	O	External serial Flash interface: SPI dta out
UART	UART1_nRTS	44	I/O	O	UART1 request-to-send (active low)
	UART1_TX	46	I/O	I	UART TX data
	UART1_RX	47	I/O	O	UART RX data
	UART1_nCTS	51	I/O	I	UART1 clear-to-send (active low)
Sense-On-Power	SOP2	23 (3)	O	I	Sense-on-power 2
	SOP1	24	I	I	Configuration sense-on-power 1
	SOP0	34	I	I	Configuration sense-on-power 0
Power	VBAT1	37	-	-	Power supply for the module
	VBAT2	40	-	-	Power supply for the module
nHIB	nHIB	4	I	I	Hibernate signal input to the NWP subsystem (active low)
RF	RF_ABG	31	I/O	I/O	WLAN analog RF 802.11 a/b/g bands
Test Port	TEST_58	48	O	O	Test Signal
	TEST_59	49	I	I	Test Signal
	TEST_60	50	O	O	Test Signal
	TEST_62	52	O	O	Test Signal

(3) This pin has dual functions: as a SOP[2] (device operation mode), and as an external TCXO enable. As a TXCO enable, the pin is an output on power up and driven logic high. During hibernate low-power mode, the pin is in a Hi-Z state but is pulled down for SOP mode to disable TCXO. Because of the SOP functionality, the pin must be used as an output only.

3.4 Connections for Unused Pins

All unused pins must be left as no connect (NC) pins. Table 3-3 provides a list of NC pins.

Table 3-3. Connections for Unused Pins

FUNCTION	SIGNAL DESCRIPTION	PIN NUMBER	ACCEPTABLE PRACTICE
DIO	Digital input or output		Wake up I/O source should not be floating during hibernate. All the I/O pins will float while in Hibernate and Reset states. Ensure pullup and pulldown resistors are available on board to maintain the state of the I/O. Leave unused GPIOs as NC
No Connect	NC	20, 21, 33, 39, 41, 45	Unused pin, leave as NC.
SOP	Configuration sense-on-power		Ensure pulldown resistors are available on unused SOP pins
Reset	RESET input for the device		Never leave the reset pin floating

ADVANCE INFORMATION

Copyright © 2019, Texas Instruments Incorporated

4 Specifications

All measurements are references of the module pins, unless otherwise indicated. All specifications are over process and voltage, unless otherwise indicated.

4.1 Absolute Maximum Ratings

These specifications indicate levels where permanent damage to the module can occur. Functional operation is not ensured under these conditions. Operation at absolute maximum conditions for extended periods can adversely affect long-term reliability of the module (1)(2).

	MIN	MAX	UNIT
V_{BAT}	–0.5	3.8	V
Digital I/O	–0.5	V_{BAT} + 0.5	V
RF pin	–0.5	2.1	V
Analog pins	–0.5	2.1	V
Operating temperature, T_A	–40	85	°C
Storage temperature, T_{stg}	–40	85	°C
Junction temperature, T_j (3)		120	°C

(1) Stresses beyond those listed under *Absolute Maximum Ratings* may cause permanent damage to the device. These are stress ratings only, and functional operation of the device at these or any other conditions beyond those indicated under *Recommended Operating Conditions* is not implied. Exposure to absolute-maximum-rated conditions for extended periods may affect device reliability.
(2) All voltage values are with respect to V_{SS}, unless otherwise noted.
(3) Junction temperature is for the CC3135RNMARGK device that is contained within the module.

4.2 ESD Ratings

				VALUE	UNIT
V_{ESD}	Electrostatic discharge (ESD) performance	Human body model (HBM), per ANSI/ESDA/JEDEC JS001 (1)		±2000	V
		Charged device model (CDM), per JESD22-C101 (2)	All pins	±500	

(1) JEDEC document JEP155 states that 500-V HBM allows safe manufacturing with a standard ESD control process.
(2) JEDEC document JEP157 states that 250-V CDM allows safe manufacturing with a standard ESD control process.

4.3 Recommended Operating Conditions

Function operation is not ensured outside this limit, and operation outside this limit for extended periods can adversely affect long-term reliability of the module (1)(2)(3).

	MIN	TYP	MAX	UNIT
V_{BAT}	2.3	3.3	3.6	V
Operating temperature	–40	25	85	°C
Ambient thermal slew	–20		20	°C/minute

(1) When operating at an ambient temperature of over 75°C, the transmit duty cycle must remain below 50% to avoid the auto-protect feature of the power amplifier. If the auto-protect feature triggers, the device takes a maximum of 60 seconds to restart the transmission.
(2) To ensure WLAN performance, ripple on the 2.3-V to 3.6-V supply must be less than ±300 mV.
(3) The minimum voltage specified includes the ripple on the supply voltage and all other transient dips. The brownout condition is 2.1 V, and care must be taken when operating at the minimum specified voltage.

ADVANCE INFORMATION

Copyright © 2019, Texas Instruments Incorporated

4.4 Current Consumption Summary: 2.4 GHz RF Band

T_A = 25°C, V_{BAT} = 3.6 V

PARAMETER	TEST CONDITIONS (1) (2)		MIN	TYP	MAX	UNIT
TX	1 DSSS	TX power level = 0		272		mA
		TX power level = 4		188		
	6 OFDM	TX power level = 0		248		
		TX power level = 4		179		
	54 OFDM	TX power level = 0		223		
		TX power level = 4		160		
RX (3)	1 DSSS			53		mA
	54 OFDM			53		
Idle connected (4)				690		µA
LPDS				115		µA
Hibernate				5		µA
Shutdown				1		µA
Peak calibration current (5) (3)	V_{BAT} = 3.6 V			420		mA
	V_{BAT} = 3.3 V			450		
	V_{BAT} = 2.3 V			610		

(1) TX power level = 0 implies maximum power (see Figure 4-1, Figure 4-2, and Figure 4-3). TX power level = 4 implies output power backed off approximately 4 dB.
(2) The CC3135MOD system is a constant power-source system. The active current numbers scale based on the V_{BAT} voltage supplied.
(3) The RX current is measured with a 1-Mbps throughput rate.
(4) DTIM = 1
(5) The complete calibration can take up to 17 mJ of energy from the battery over a time of 24 ms. In default mode, calibration is performed sparingly, and typically occurs when re-enabling the NWP and when the temperature has changed by more than 20°C. There are two additional calibration modes that may be used to reduced or completely eliminate the calibration event. For further details, see *CC31XX CC32XX SimpleLink™ Wi-Fi® and IoT Network Processor Programmer's Guide*.

4.5 Current Consumption Summary: 5 GHz RF Band

T_A = 25°C, V_{BAT} = 3.6 V

PARAMETER	TEST CONDITIONS (1) (2)	MIN	TYP	MAX	UNIT
TX	6 OFDM		318		mA
	54 OFDM		293		
RX (3)	54 OFDM		61		mA
Idle connected (4)			690		µA
LPDS			115		µA
Hibernate			5		µA
Shutdown			1		µA
Peak calibration current (5) (3)	V_{BAT} = 3.6 V		290		mA
	V_{BAT} = 3.3 V		310		
	V_{BAT} = 2.7 V		310		
	V_{BAT} = 2.3 V		365		

(1) TX power level = 0 implies maximum power (see Figure 4-1, Figure 4-2, and Figure 4-3). TX power level = 4 implies output power backed off approximately 4 dB.
(2) The CC3135MOD system is a constant power-source system. The active current numbers scale based on the V_{BAT} voltage supplied.
(3) The RX current is measured with a 1-Mbps throughput rate.
(4) DTIM = 1
(5) The complete calibration can take up to 17 mJ of energy from the battery over a time of 24 ms. In default mode, calibration is performed sparingly, and typically occurs when re-enabling the NWP and when the temperature has changed by more than 20°C. There are two additional calibration modes that may be used to reduced or completely eliminate the calibration event. For further details, see *CC31XX, CC32XX SimpleLink™ Wi-Fi® and IoT Network Processor Programmer's Guide*.

ADVANCE INFORMATION

Copyright © 2019, Texas Instruments Incorporated

4.6 TX Power Control for 2.4 GHz Band

The CC3135MOD has several options for modifying the output power of the device when required. For the 2.4 GHz band it is possible to lower the overall output power at a global level using the global TX power level setting. In addition, the 2.4 GHz band allows the user to enter additional back-offs (1), per channel, region (2) and modulation rates (3), via Image creator (see the *UniFlash CC31xx, CC32xx SimpleLink™ Wi-Fi® and Internet-on-a chip™ Solution ImageCreator and Programming Tool User's Guide* for more details).

Figure 4-1, Figure 4-2, and Figure 4-3 show TX Power and IBAT versus TX power level settings for modulations of 1 DSSS, 6 OFDM, and 54 OFDM, respectively.

In Figure 4-1, the area enclosed in the circle represents a significant reduction in current during transition from TX power level 3 to level 4. In the case of lower range requirements (14-dBm output power), TI recommends using TX power level 4 to reduce the current.

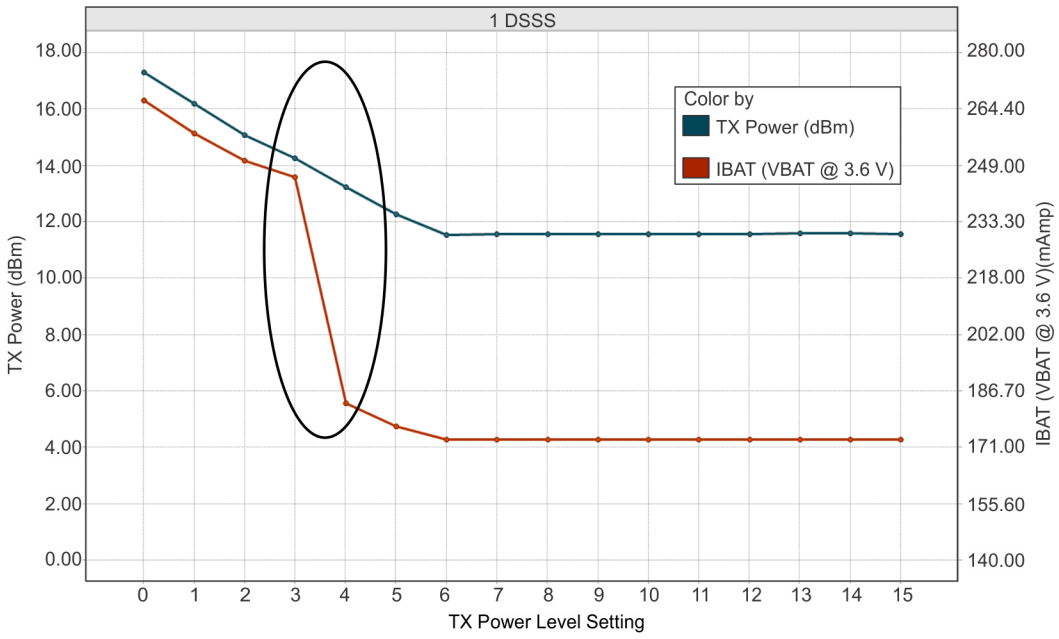

Figure 4-1. TX Power and IBAT vs TX Power Level Settings (1 DSSS)

ADVANCE INFORMATION

(1) The back-off range is between -6 dB to +6 dB in 0.25 dB increments.
(2) FCC, IC/ISED, ETSI/CE (Europe), and MIC (Japan) are supported.
(3) Back-off rates are grouped into 11b rates, high modulation rates (MCS7, 54 OFDM and 48 OFDM), and lower modulation rates (all other rates).

Copyright © 2019, Texas Instruments Incorporated

ADVANCE INFORMATION

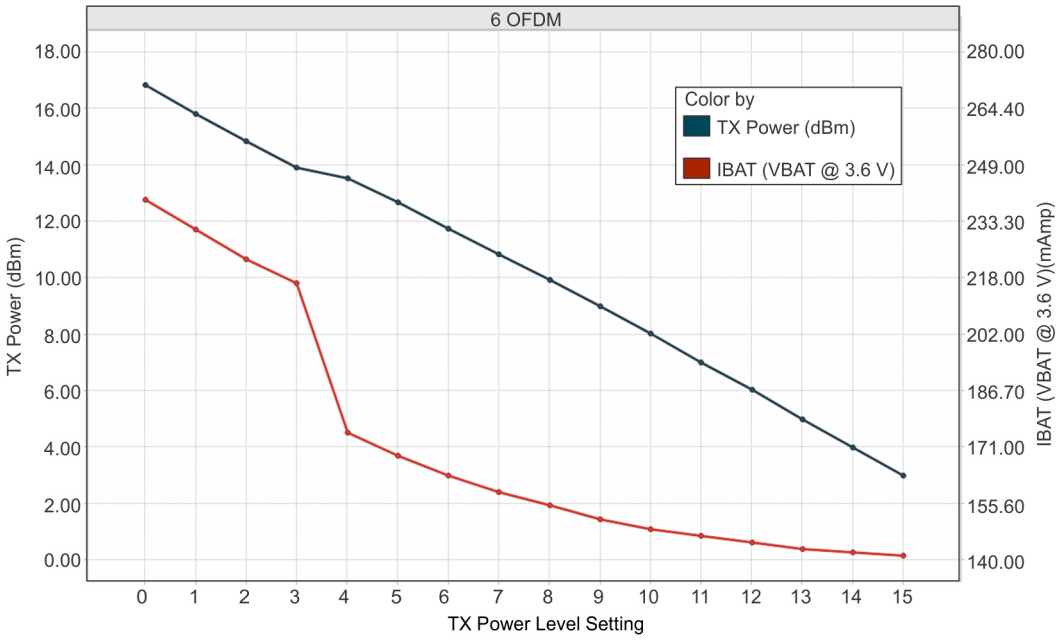

Figure 4-2. TX Power and IBAT vs TX Power Level Settings (6 OFDM)

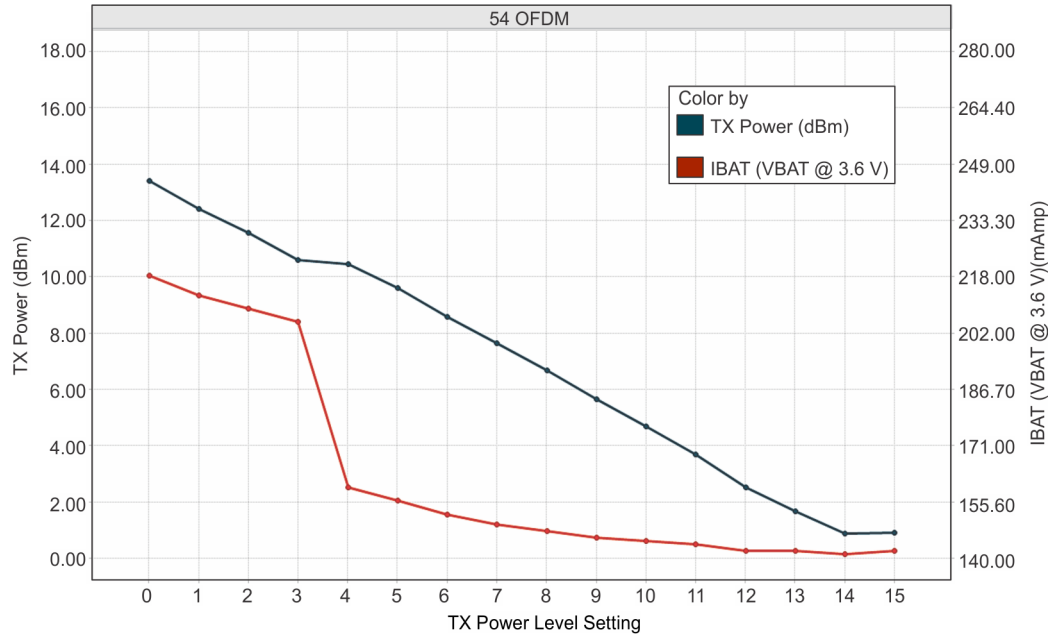

Figure 4-3. TX Power and IBAT vs TX Power Level Settings (54 OFDM)

4.7 TX Power Control for 5 GHz Band

5 GHz power control is done via Image Creator where the maximum transmit power is provided (1). Within Image Creator power control is possible per channel, region (2), and modulation rates (3). In addition, it is possible to enter an additional back-off (4) factor per channel and modulation rate for further margin to regulatory requirements.

(1) The maximum transmit power range is 18 dBm to 0.125 dBm in 0.125 dBm decrements.
(2) FCC, IC/ISED, ETSI/CE, and MIC are supported.
(3) Rates are grouped into high modulation rates (MCS7, 54 OFDM and 48 OFDM) and lower modulation rates (all other rates).
(4) The back-off range is 0 dBm to 18 dBm in 0.125 dBm increments, with the maximum back-off not exceed that of the maximum transmit power.

Copyright © 2019, Texas Instruments Incorporated

Finally, it is also possible to set the TX and RX trace losses to the antenna per band (5). The peak antenna gain (6) can also be provided, thus allowing further control. For a full description of options and capabilities see the *UniFlash CC31xx, CC32xx SimpleLink™ Wi-Fi® and Internet-on-a chip™ Solution ImageCreator and Programming Tool User's Guide*.

(5) The range of losses if from 0 dBm to 7.75 dBm in 0.125 dBm increments.
(6) The antenna gain has a range of -2 dBi to 5.75 dBi in 0.125 dBi increments.

ADVANCE INFORMATION

Copyright © 2019, Texas Instruments Incorporated

ADVANCE INFORMATION

4.8 Brownout and Blackout Conditions

The device enters a brownout condition when the input voltage dips below $V_{BROWNOUT}$ (see Figure 4-4 and Figure 4-5). This condition must be considered during design of the power supply routing, especially if operating from a battery. High-current operations, such as a TX packet or any external activity (not necessarily related directly to networking) can cause a drop in the supply voltage, potentially triggering a brownout condition. The resistance includes the internal resistance of the battery, contact resistance of the battery holder (four contacts for a 2× AA battery), and the wiring and PCB routing resistance.

NOTE

When the device is in the Hibernate state, brownout is not detected; only blackout is in effect during the Hibernate state.

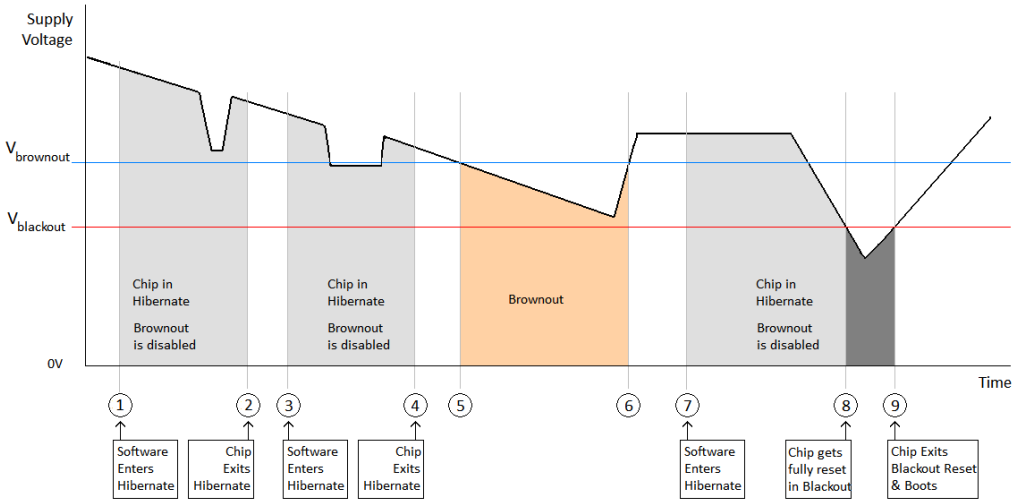

Figure 4-4. Brownout and Blackout Levels (1 of 2)

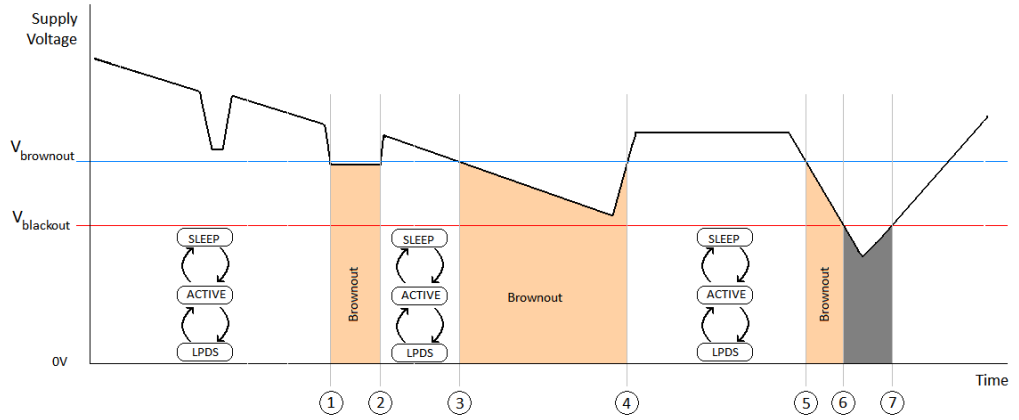

Figure 4-5. Brownout and Blackout Levels (2 of 2)

In the brownout condition, all sections of the CC3135MOD (including the 32-kHz RTC) shut down except for the Hibernate module, which remains on. The current in this state can reach approximately 400 µA. The blackout condition is equivalent to a hardware reset event in which all states within the device are lost.

Copyright © 2019, Texas Instruments Incorporated

Table 4-1 lists the brownout and blackout voltage levels.

Table 4-1. Brownout and Blackout Voltage Levels

CONDITION	VOLTAGE LEVEL	UNIT
$V_{brownout}$	2.1	V
$V_{blackout}$	1.67	V

4.9 Electrical Characteristics for DIO Pins

T_A = 25°C, V_{BAT} = 3.3 V

PARAMETER			TEST CONDITIONS(1)	MIN	NOM	MAX	UNIT
C_{IN}	Pin capacitance				4		pF
V_{IH}	High-level input voltage			0.65 × V_{DD}		V_{DD} + 0.5 V	V
V_{IL}	Low-level input voltage			–0.5		0.35 × V_{DD}	V
I_{IH}	High-level input current				5		nA
I_{IL}	Low-level input current				5		nA
V_{OH}	High-level output voltage		IL = 2 mA; configured I/O drive strength = 2 mA; 2.4 V ≤ V_{DD} < 3.6 V			V_{DD} × 0.8	V
			IL = 4 mA; configured I/O drive strength = 4 mA; 2.4 V ≤ V_{DD} < 3.6 V			V_{DD} × 0.7	V
			IL = 8 mA; configured I/O drive strength = 8 mA; 2.4 V ≤ V_{DD} < 3.6 V			V_{DD} × 0.7	V
			IL = 2 mA; configured I/O drive strength = 2 mA; 2.3 V ≤ V_{DD} < 2.4 V			V_{DD} × 0.75	V
V_{OL}	Low-level output voltage		IL = 2 mA; configured I/O drive strength = 2 mA; 2.4 V ≤ V_{DD} < 3.6 V	V_{DD} × 0.2			V
			IL = 4 mA; configured I/O drive strength = 4 mA; 2.4 V ≤ V_{DD} < 3.6 V	V_{DD} × 0.2			V
			IL = 8 mA; configured I/O drive strength = 8 mA; 2.4 V ≤ V_{DD} < 3.6 V	V_{DD} × 0.2			V
			IL = 2 mA; configured I/O drive strength = 2 mA; 2.3 V ≤ V_{DD} < 2.4 V	V_{DD} × 0.25			V
I_{OH}	High-level source current	2-mA drive		2			mA
		4-mA drive		4			
		6-mA drive		6			
I_{OL}	Low-level sink current	2-mA drive		2			mA
		4-mA drive		4			
		6-mA drive		6			
V_{IL}	nRESET(2)			0.6			V

(1) TI recommends using the lowest possible drive strength that is adequate for the applications. This recommendation minimizes the risk of interference to the WLAN radio and reduces any potential degradation of RF sensitivity and performance. The default drive strength setting is 6 mA.
(2) The nRESET pin must be held below 0.6 V for the device to register a reset.

ADVANCE INFORMATION

Copyright © 2019, Texas Instruments Incorporated

ADVANCE INFORMATION

4.10 WLAN Receiver Characteristics

Table 4-2. WLAN Receiver Characteristics: 2.4 GHz Band

T_A = 25°C, V_{BAT} = 2.3 V to 3.6 V. Parameters are measured at the SoC pin on channel 6 (2437 MHz).

PARAMETER	TEST CONDITIONS (Mbps)	MIN	TYP	MAX	UNIT
Sensitivity (8% PER for 11b rates, 10% PER for 11g/11n rates)[1]	1 DSSS		–94.5		dBm
	2 DSSS		–92.5		
	11 CCK		–86.5		
	6 OFDM		–89		
	9 OFDM		–88.5		
	18 OFDM		–85		
	36 OFDM		–79		
	54 OFDM		–73		
	MCS7 (GF)[2]		–70		
Maximum input level (10% PER)	802.11b		–2.5		dBm
	802.11g		–8.5		

(1) Sensitivity is 1-dB worse on channel 13 (2472 MHz).
(2) Sensitivity for mixed mode is 1-dB worse.

Table 4-3. WLAN Receiver Characteristics: 5 GHz Band

T_A = 25°C, V_{BAT} = 2.3 V to 3.6 V.

PARAMETER	TEST CONDITIONS (Mbps)	MIN	TYP	MAX	UNIT
Sensitivity (10% PER for 11g/11n rates)	6 OFDM		-89		dBm
	9 OFDM		-88		
	18 OFDM		-85		
	36 OFDM		-78.5		
	54 OFDM		-72		
	MCS7 (GF)[1]		-68		
Maximum input level	802.11a		-17		dBm

(1) Sensitivity for mixed mode is 1-dB worse.

4.11 WLAN Transmitter Characteristics

Table 4-4. WLAN Transmitter Characteristics: 2.4 GHz Band

T_A = 25°C, V_{BAT} = 2.3 V to 3.6 V. Parameters measured at SoC pin on channel 6 (2437 MHz).[1][2]

PARAMETER	TEST CONDITIONS	MIN	TYP	MAX	UNIT
Operating frequency range[3][4]		2412		2472	MHz
Maximum RMS output power measured at 1 dB from IEEE spectral mask or EVM	1 DSSS		16.5		dBm
	2 DSSS		16.5		
	11 CCK		16.8		
	6 OFDM		15.8		
	9 OFDM		15.8		
	18 OFDM		15.5		
	36 OFDM		14.5		
	54 OFDM		13		
	MCS7		11.5		
Transmit center frequency accuracy		–25		25	ppm

(1) The OFDM and MCS7 edge channels (2412 and 2462 MHz) have reduced TX power to meet FCC emission limits.
(2) Power of 802.11b rates are reduced to meet ETSI requirements in Europe.
(3) Channels 1 (2142 MHz) through 11 (2462 MHz) are supported for FCC.
(4) Channels 1 (2142 MHz) through 13 (2472MHz) are supported for Europe and Japan. Note that channel 14 is not supported for Japan.

Copyright © 2019, Texas Instruments Incorporated

Table 4-5. WLAN Transmitter Characteristics: 5 GHz Band

T_A = 25°C, V_{BAT} = 2.3 V to 3.6 V.(1) Parameters measured at SoC pin are the average of channels 40, 56, 120, and 157 .(2)(3)

PARAMETER	TEST CONDITIONS	MIN	TYP(4)	MAX	UNIT
Operating frequency range(5)(6)(7)		5180		5845(8)	MHz
Maximum RMS output power measured at 1 dB from IEEE spectral mask or EVM	6 OFDM		14.5		dBm
	9 OFDM		14		
	18 OFDM		14		
	36 OFDM		13		
	54 OFDM		11.5		
	MCS7		10.5		
Transmit center frequency accuracy		-20		20	ppm

(1) Transmit power will be reduced by 1.5dB for V_{BAT} < 2.8V
(2) FCC channels 36, 60, 64, 100, and 140, where harmonics/sub-harmonics of fall in the FCC restricted band, have reduced output power to meet the FCC RSE requirement.
(3) The edge channels (100 and 140) have reduced TX power to meet FCC emissions limits.
(4) Less than 0.5dB variation is seen across the entire 5 GHz band.
(5) FCC band covers U-NII-1, U-NII-2A, U-NII-2C, and U-NII-3 20-MHz BW modulations.
(6) Europe bands 1, 2 and 3, 20-MHz BW modulations are supported.
(7) For Japan, W52, W53 and W56, 20-MHz BW modulations are supported.
(8) Current FCC frequency limit for the U-NII-3 20-MHZ band is CH 165 (5825 MHz). The CC3235x can also support for proposed FCC CH169 (5845 MHz).

4.12 BLE and WLAN Coexistence Requirements

For proper BLE and WLAN 2.4 GHz radio coexistence(1), the following requirements must be met:

Table 4-6. Isolation Requirement

PARAMETER	Band	MIN	TYP	MAX	UNIT
Port-to-port isolation	Dual antenna configuration(1)	20(2)			dB

(1) The CC3135MOD modules are compatible with TI BLE modules using an external RF switch.
(1) A single antenna configuration is possible using the CC3x35 devices.
(2) For dual antenna configuration antenna placement must be such that isolation between the BLE and WLAN ports is at least 20 dB.

4.13 Reset Requirement

PARAMETER		MIN	TYP	MAX	UNIT
V_{IH}	Operation mode level		0.65 × V_{BAT}		V
V_{IL}	Shutdown mode level(1)	0	0.6		V
	Minimum time for nReset low for resetting the module	5			ms
T_r and T_f	Rise and fall times		20		µs

(1) The nRESET pin must be held below 0.6 V for the module to register a reset.

4.14 Thermal Resistance Characteristics for MOB Package

NAME	DESCRIPTION	°C/W	AIR FLOW (m/s)
$R\Theta_{JC}$	Junction-to-case	11.4	0.00
$R\Theta_{JB}$	Junction-to-board	8.0	0.00
$R\Theta_{JA}$	Junction-to-free air	18.7	0.00
Psi_{JT}	Junction-to-package top	5.3	0.00
Psi_{JB}	Junction-to-board	7.7	0.00

ADVANCE INFORMATION

Copyright © 2019, Texas Instruments Incorporated

4.15 Timing and Switching Characteristics

4.15.1 Power-Up Sequencing

For proper start-up of the CC3135MOD module, perform the recommended power-up sequencing as follows:

1. Tie V_{BAT1} (pin 37) and V_{BAT2} (pin 40) together on the board.
2. Hold the nRESET pin low while the supplies are ramping up.

Figure 4-6 shows the reset timing diagram for the first-time power-up and reset removal.

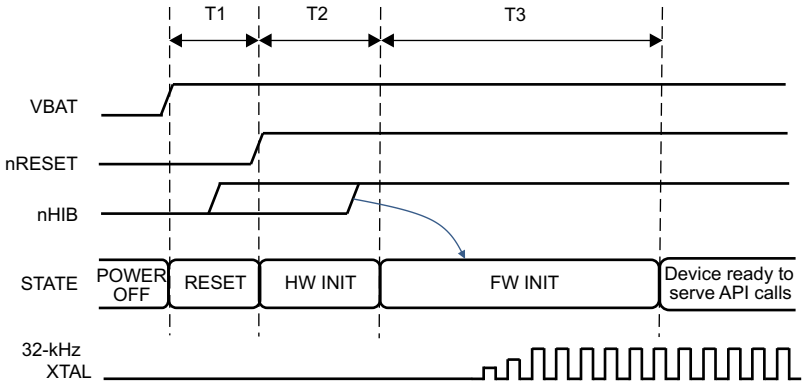

Figure 4-6. First-Time Power-Up and Reset Removal Timing Diagram

Table 4-7 describes the timing requirements for the first-time power-up and reset removal.

Table 4-7. First-Time Power-Up and Reset Removal Timing Requirements

ITEM	NAME	DESCRIPTION	MIN	TYP	MAX	UNIT
T1	nReset time	nReset timing after VBAT supplies are stable		1		ms
T2	Hardware wake-up time			25		ms
T3	Initialization time	Internal 32-kHz XTAL settling plus firmware initialization time plus radio calibration		1.35		s

4.15.2 Power-Down Sequencing

For proper power down of the CC3135MOD module, ensure that the nRESET (pin 35) and nHIB (pin 4) pins have remained in a known state for a minimum of 200 ms before removing power from the module.

4.15.3 Device Reset

When a device restart is required, the user may issue a negative pulse on either the nHIB pin (pin 4) or on the nRESET pin (pin 35), keeping the other pulled high, depending on the configuration of the platform. If the nRESET pin is used, the user must insure the following:

- A high-to-low reset pulse (on pin 35) of at least 200-ms duration

To ensure a proper reset sequence, the user must call the sl_stop function prior to toggling the reset.

ADVANCE INFORMATION

Copyright © 2019, Texas Instruments Incorporated

4.15.4 Wakeup From HIBERNATE Mode Timing

Figure 4-7 shows the timing diagram for wakeup from HIBERNATE mode.

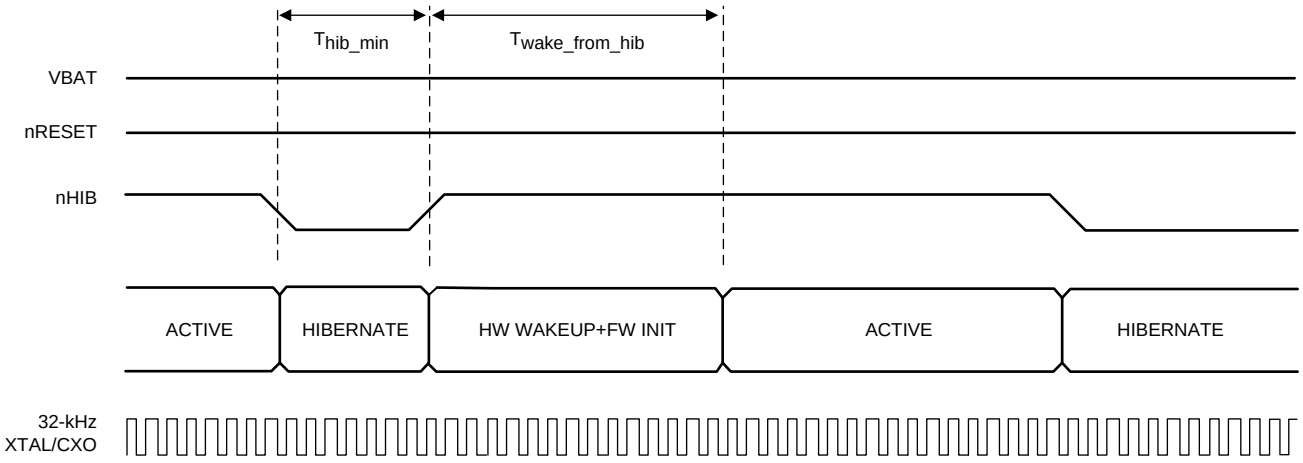

Figure 4-7. nHIB Timing Diagram

NOTE

The internal 32.768-kHz XTAL is kept enabled by default when the chip goes into HIBERNATE mode in response to nHIB being pulled low.

Table 4-8 describes the timing requirements for nHIB.

Table 4-8. nHIB Timing Requirements

ITEM	NAME	DESCRIPTION	MIN	TYP	MAX	UNIT
T_{hib_min}	Minimum hibernate time	Minimum pulse width of nHIB being low(1)	10			ms
$T_{wake_from_hib}$	Hardware wakeup time plus firmware initialization time	See(2)		50		ms

(1) If temperature changes by more than 20°C, initialization time from HIB can increase by 200 ms due to radio calibration.
(2) Ensure that the nHIB pulse width is kept above the minimum requirement under all conditions (such as power up, MCU reset, and so on).

ADVANCE INFORMATION

Copyright © 2019, Texas Instruments Incorporated

4.16 External Interfaces

This section describes the external interfaces supported by the CC3135MOD module, as follows:

- SPI Host
- Host UART
- External Flash

4.16.1 SPI Host Interface

The device interfaces to an external host using the SPI. The CC3135MOD module can interrupt the host using the HOST_INTR line to initiate the data transfer over the interface. The SPI host interface can work up to a speed of 20 MHz.

Figure 4-8 shows the SPI host interface.

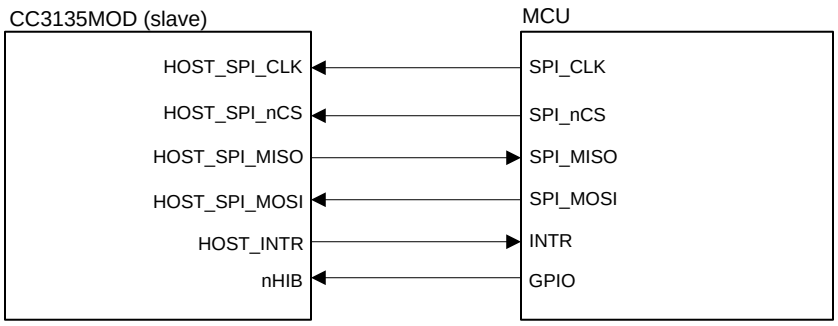

Figure 4-8. SPI Host Interface

Table 4-9 lists the SPI host interface pins.

Table 4-9. SPI Host Interface

PIN NAME	DESCRIPTION
HOST_SPI_CLK	Clock (up to 20 MHz) from MCU host to CC3135MOD module
HOST_SPI_nCS	CS (active low) signal from MCU host to CC3135MOD module
HOST_SPI_MOSI	Data from MCU host to CC3135MOD module
HOST_INTR	Interrupt from CC3135MOD module to MCU host
HOST_SPI_MISO	Data from CC3135MOD module to MCU host
nHIB	Active-low signal that commands the CC3135MOD module to enter hibernate mode (lowest power state)

Figure 4-9 shows the host SPI timing diagram.

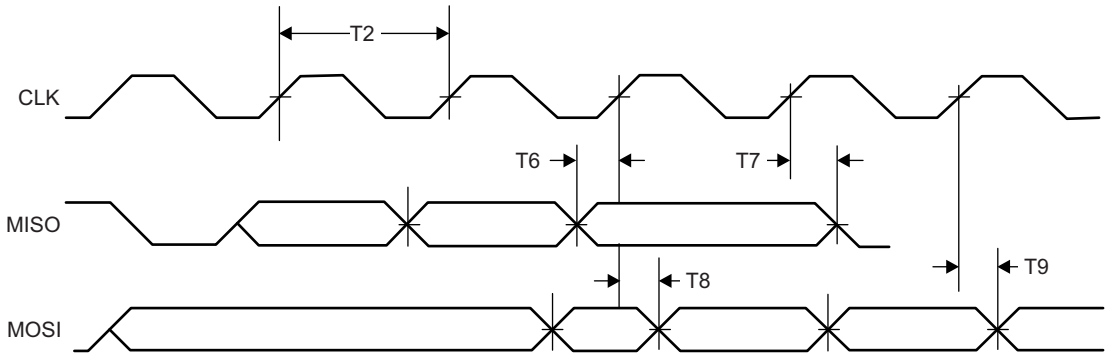

Figure 4-9. Host SPI Timing

ADVANCE INFORMATION

Copyright © 2019, Texas Instruments Incorporated

Table 4-10 lists the host SPI timing parameters.

Table 4-10. Host SPI Timing Parameters

PARAMETER NUMBER	DESCRIPTION		MIN	MAX	UNIT
T1	F	Clock frequency at V_{BAT} = 3.3 V		20	MHz
		Clock frequency at V_{BAT} = 2.3 V		12	
T2	t_{clk}	Clock period	50		ns
T3	t_{LP}	Clock low period		25	ns
T4	t_{HT}	Clock high period		25	ns
T5	D	Duty cycle	45%	55%	
T6	t_{IS}	RX data setup time	4		ns
T7	t_{IH}	RX data hold time	4		ns
T8	t_{OD}	TX data output delay		20	ns
T9	t_{OH}	TX data hold time		24	ns

4.16.2 Host UART Interface

The SimpleLink device requires the UART configuration described in Table 4-11.

Table 4-11. SimpleLink™ UART Configuration

PROPERTY	SUPPORTED CC3135 CONFIGURATION
Baud rate	115200 bps, no auto-baud rate detection, can be changed by the host up to 3 Mbps using a special command
Data bits	8 bits
Flow control	CTS/RTS
Parity	None
Stop bits	1
Bit order	Least significant bit (LSB) first
Host interrupt polarity	Active high
Host interrupt mode	Rising edge or level 1
Endianness	Little-endian only(1)

(1) The SimpleLink device does not support automatic detection of the host length while using the UART interface.

ADVANCE INFORMATION

4.16.2.1 5-Wire UART Topology

Figure 4-10 shows the typical 5-wire UART topology comprised of four standard UART lines plus one IRQ line from the device to the host controller to allow efficient low power mode.

Figure 4-10 shows the typical and recommended UART topology because it offers the maximum communication reliability and flexibility between the host and the SimpleLink device.

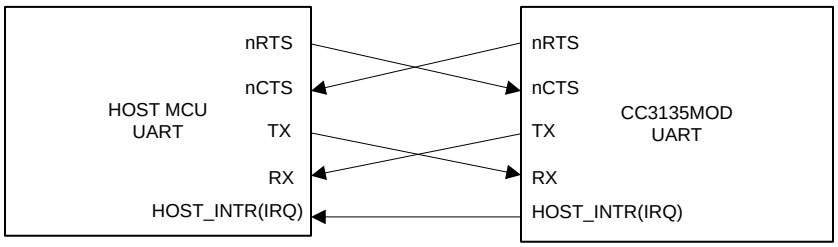

Figure 4-10. Typical 5-Wire UART Topology

4.16.2.2 4-Wire UART Topology

The 4-wire UART topology eliminates the host IRQ line (see Figure 4-11). Using this topology requires one of the following conditions to be met:

- Host is always awake or active.
- Host goes to sleep, but the UART module has receiver start-edge detection for automatic wake up and does not lose data.

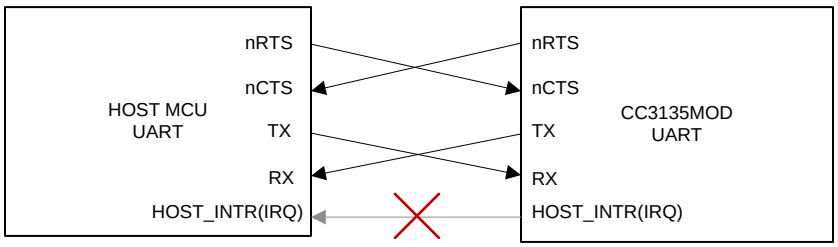

Figure 4-11. 4-Wire UART Configuration

4.16.2.3 3-Wire UART Topology

The 3-wire UART topology requires only the following lines (see Figure 4-12).

- RX
- TX
- nCTS

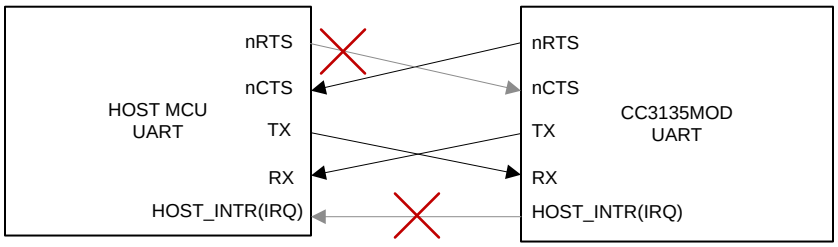

Figure 4-12. 3-Wire UART Topology

ADVANCE INFORMATION

Copyright © 2019, Texas Instruments Incorporated

Using 3-wire topology requires one of the following conditions to be met:

- Host always stays awake or active.
- Host goes to sleep, but the UART module has receiver start-edge detection for auto wake up and does not lose data.
- Host can always receive any amount of data transmitted by the SimpleLink device because there is no flow control in this direction.

Because there is no full flow control, the host cannot stop the SimpleLink device to send its data; thus, the following parameters must be carefully considered:

- Maximum baud rate
- RX character interrupt latency and low-level driver jitter buffer
- Time consumed by the user's application

4.16.3 External Flash Interface

The CC3135MOD module includes the Macronix 32-Mbit serial Flash. The Serial Flash can be programmed directly via the external Flash interface (pins 13, 14, 15, and 17). Note that during normal operation, the external Flash interface should remain unconnected.

For timing details, see the MX25R3235F data sheet.

ADVANCE INFORMATION

Copyright © 2019, Texas Instruments Incorporated

5 Detailed Description

5.1 Overview

The CC3135MOD Dual-Band Wi-Fi module contains a dedicated Arm® MCU that offloads many of the networking activities from the host MCU. Including an 802.11 a/b/g/n radio, baseband, and MAC with a powerful crypto engine for a fast, secure WLAN and Internet connections with 256-bit encryption. The CC3135MOD module supports station, AP, and Wi-Fi Direct modes. The module also supports WPA2 personal and enterprise security and WPS 2.0. The Wi-Fi network processor includes an embedded IPv6 and IPv4 TPC/IP stack.

5.2 Module Features

5.2.1 WLAN

The WLAN features are as follows:

- 802.11 a/b/g/n integrated radio, modem, and MAC supporting WLAN communication as a BSS station, AP, and Wi-Fi Direct client and group owner with CCK and OFDM rates in the 2.4 GHz ISM band, channels 1 to 13, and 5 GHz U-NII band.

NOTE

802.11n is supported only in Wi-Fi station, Wi-Fi direct, and P2P client modes.

- Autocalibrated radio with a single-ended 50-Ω interface enables easy connection to the antenna without requiring expertise in radio circuit design.
- Advanced connection manager with multiple user-configurable profiles stored in a serial Flash allows automatic, fast connection to an access point without user or host intervention.
- Supports all common Wi-Fi security modes for personal and enterprise networks, with on-chip security accelerators, including WEP, WPA/WPA2 PSK, and WPA2 Enterprise (802.1x).
- Smart provisioning options deeply integrated within the device provide a comprehensive end-to-end solution. Elaborate events notification to the host enable the application to control the provisioning decision flow. The wide variety of Wi-Fi provisioning methods include:
  - Access Point using HTTPS
  - SmartConfig Technology: a 1-step, 1-time process to connect a CC3135MOD-enabled module to the home wireless network, removing dependency on the I/O capabilities of the host MCU; thus, the device is usable by deeply embedded applications.
- 802.11 transceiver mode transmits and receives proprietary data through a socket without adding MAC or PHY headers, and provides the option to select the working channel, rate, and transmitted power. The receiver mode works together with the filtering options.

ADVANCE INFORMATION

Copyright © 2019, Texas Instruments Incorporated

5.2.2 Network Stack

The network stack features are as follows:

- Integrated IPv4, IPv6, and TCP/IP stack with BSD socket APIs for simple Internet connectivity with any MCU, microprocessor, or ASIC

NOTE

Not all APIs are 100% BSD compliant. Not all BSD APIs are supported.

- Support of 16 simultaneous TCP, UDP, or RAW sockets
- Support of 6 simultaneous SSL\TLS sockets
- Built-in network protocols:
  - Static IP, LLA, DHCPv4, DHCPv6 (Stateful) with DAD and Stateless auto configuration
  - ARP, ICMPv4, IGMP, ICMPv6, MLD, ND
  - DNS client for easy connection to the local network and the Internet
- Built-in network application and utilities:
  - HTTP/HTTPS
    - Web page content stored on serial Flash
    - RESTful APIs for setting\configuring application content
    - Dynamic user callbacks
- Service discovery: Multicast DNS service discovery allows a client to advertise its service without a centralized server. After connecting to the access point, the CC3135 device provides critical information, such as device name, IP, vendor, and port number.
- DHCP server
- Ping

Table 5-1 summarizes the NWP features.

Table 5-1. NWP Features

FEATURES	DESCRIPTION
Wi-Fi standards	802.11a/b/g/n station 802.11a/b/g AP supporting up to four stations Wi-Fi Direct client and group owner
Wi-Fi channels	2.4 GHz ISM Channels, 5 GHz U-NIII Channels
Wi-Fi security	WEP, WPA/WPA2 PSK, WPA2 enterprise (802.1x)
Wi-Fi provisioning	SmartConfig technology, Wi-Fi protected setup (WPS2), AP mode with internal HTTP/HTTPS web server
IP protocols	IPv4 and IPv6
IP addressing	Static IP, LLA, DHCPv4, DHCPv6 (Stateful) with DAD and stateless auto configuration
Cross layer	ARP, ICMPv4, IGMP, ICMPv6, MLD, NDP
Transport	UDP, TCP SSLv3.0/TLSv1.0/TLSv1.1/TLSv1.2 RAW IP
Network applications and utilities	Ping HTTP/HTTPS web server mDNS DNS-SD DHCP server
Host interface	UART/SPI
Security	Secure file system Unique ID and private key for device authentication Crypto utilities Secure content delivery
Power management	Enhanced power policy management uses 802.11 power save and deep sleep power modes

ADVANCE INFORMATION

Copyright © 2019, Texas Instruments Incorporated

Table 5-1. NWP Features (continued)

FEATURES	DESCRIPTION
Other	RF Transceiver Programmable RX Filters with Events trigger mechanism including WoWLAN Recovery mechanism – Restore to factory default

5.2.2.1 Security

The SimpleLink Wi-Fi CC3135MOD internet-on-a chip module enhances the security capabilities available for development of IoT devices, while completely offloading these activities from the MCU to the networking subsystem. The security capabilities include the following key features:

Wi-Fi and Internet security

- Personal and enterprise Wi-Fi security
  - Personal standards
    - AES (WPA2-PSK)
    - TKIP (WPA-PSK)
    - WEP
- **Enterprise standards**
  - EAP Fast
  - EAP PEAPv0 MSCHAPv2
  - EAP PEAPv0 TLS
  - EAP PEAPv1 TLS EAP LS
  - EAP TTLS TLS
  - EAP TTLS MSCHAPv2

ADVANCE INFORMATION

Copyright © 2019, Texas Instruments Incorporated

- **Secure sockets**
  - Protocol versions: SSL v3/TLS 1.0/TLS 1.1/TLS 1.2
  - On-chip powerful crypto engine for fast, secure Wi-Fi and internet connections with 256-bit AES encryption for TLS and SSL connections
  - Ciphers suites
    - SL_SEC_MASK_SSL_RSA_WITH_RC4_128_SHA
    - SL_SEC_MASK_SSL_RSA_WITH_RC4_128_MD5
    - SL_SEC_MASK_TLS_RSA_WITH_AES_256_CBC_SHA
    - SL_SEC_MASK_TLS_DHE_RSA_WITH_AES_256_CBC_SHA
    - SL_SEC_MASK_TLS_ECDHE_RSA_WITH_AES_256_CBC_SHA
    - SL_SEC_MASK_TLS_ECDHE_RSA_WITH_RC4_128_SHA
    - SL_SEC_MASK_TLS_RSA_WITH_AES_128_CBC_SHA256
    - SL_SEC_MASK_TLS_RSA_WITH_AES_256_CBC_SHA256
    - SL_SEC_MASK_TLS_ECDHE_RSA_WITH_AES_128_CBC_SHA256
    - SL_SEC_MASK_TLS_ECDHE_ECDSA_WITH_AES_128_CBC_SHA256
    - SL_SEC_MASK_TLS_ECDHE_ECDSA_WITH_AES_128_CBC_SHA
    - SL_SEC_MASK_TLS_ECDHE_ECDSA_WITH_AES_256_CBC_SHA
    - SL_SEC_MASK_TLS_RSA_WITH_AES_128_GCM_SHA256
    - SL_SEC_MASK_TLS_RSA_WITH_AES_256_GCM_SHA384
    - SL_SEC_MASK_TLS_DHE_RSA_WITH_AES_128_GCM_SHA256
    - SL_SEC_MASK_TLS_DHE_RSA_WITH_AES_256_GCM_SHA384
    - SL_SEC_MASK_TLS_ECDHE_RSA_WITH_AES_128_GCM_SHA256
    - SL_SEC_MASK_TLS_ECDHE_RSA_WITH_AES_256_GCM_SHA384
    - SL_SEC_MASK_TLS_ECDHE_ECDSA_WITH_AES_128_GCM_SHA256
    - SL_SEC_MASK_TLS_ECDHE_ECDSA_WITH_AES_256_GCM_SHA384
    - SL_SEC_MASK_TLS_ECDHE_ECDSA_WITH_CHACHA20_POLY1305_SHA256
    - SL_SEC_MASK_TLS_ECDHE_RSA_WITH_CHACHA20_POLY1305_SHA256
    - SL_SEC_MASK_TLS_DHE_RSA_WITH_CHACHA20_POLY1305_SHA256
  - Server authentication
  - Client authentication
  - Domain name verification
  - Socket upgrade to secure socket – STARTTLS
- Secure HTTP server (HTTPS)
- The trusted root-certificate catalog verifies that the CA used by the application is trusted and known secure content delivery.
- The TI root-of-trust public key is a hardware-based mechanism that allows authenticating TI as the genuine origin of a given content using asymmetric keys.
- Secure content delivery allows file transfer to the system in a secure way on any unsecured tunnel.
- **Code and data security**
  - Secured network information: Network passwords and certificates are encrypted
  - Secured and authenticated service pack: SP is signed based on TI certificate

ADVANCE INFORMATION

Copyright © 2019, Texas Instruments Incorporated

5.2.3 FIPS 140-2 Level 1 Certification

The Federal Information Processing Standard (FIPS) Publication 140-2 is a U.S. government computer security standard. It is commonly referred to as FIPS 140-2, and is used to accredit the design and implementation of cryptographic functions, for example within a chip. A cryptographic function within a chip security system is necessary to maintain the confidentiality and integrity of the information that is being processed.

The security functions of the CC3235x chip which is inside the CC3235MODx module, are FIPS certified to FIPS 140-2 level 1. This certification covers topics such as: cryptographic specifications, ports and interfaces, a finite state model for the cryptographic functions, the operational environment of the function, and how cryptographic keys are managed. The certification provides the assurance that the implementation meets FIPS 140-2 level 1 standards.

5.2.4 Host Interface and Driver

- Interfaces over a 4-wire SPI with any MCU or a processor at a clock speed of 20 MHz
- Interfaces over UART with any MCU with a baud rate up to 3 Mbps. A low footprint driver is provided for TI MCUs and is easily ported to any processor or ASIC.
- Simple APIs enable easy integration with any single-threaded or multithreaded application.

5.2.5 System

- Connects directly to a battery
- Ultra-low leakage when disabled (hibernate mode) with a current of less than 5 µA with the RTC running and 1 µA when in shutdown mode.
- Integrated clock sources

5.3 Power-Management Subsystem

The CC3135MOD power-management subsystem contains DC-DC converters to accommodate the differing voltage or current requirements of the system.

The CC3135MOD is a fully integrated module-based WLAN radio solution used on an embedded system with a wide-voltage supply range. The internal power management, including DC-DC converters and LDOs, generates all of the voltages required for the module to operate from a wide variety of input sources. For maximum flexibility, the module can operate in the modes described in the following sections.

5.3.1 V_{BAT} Wide-Voltage Connection

In the wide-voltage battery connection, the module can be directly connected to two AA alkaline batteries. All other voltages required to operate the device are generated internally by the DC-DC converters. This scheme is the most common mode for the device because it supports wide-voltage operation from 2.3 to 3.6 V.

5.4 Low-Power Operating Modes

This section describes the low-power modes supported by the module to optimize battery life.

5.4.1 Low-Power Deep Sleep

The low-power deep-sleep (LPDS) mode is an energy-efficient and transparent sleep mode that is entered automatically during periods of inactivity based on internal power optimization algorithms. The module can wake up in less than 3 ms from the internal timer or from any incoming host command. Typical battery drain in this mode is 135 µA. During LPDS mode, the module retains the software state and certain configuration information. The operation is transparent to the external host; thus, no additional handshake is required to enter or exit this sleep mode.

ADVANCE INFORMATION

Copyright © 2019, Texas Instruments Incorporated

5.4.2 Hibernate

The hibernate mode is the lowest power mode in which all of the digital logic is power-gated. Only a small section of the logic powered directly by the main input supply is retained. The real-time clock (RTC) is kept running and the module wakes up when the n_HIB line is asserted by the host driver. The typical battery drain in this mode is 5 µA. The wake-up time is longer than LPDS mode at about 50 ms.

5.4.3 Shutdown

Shutdown mode is the lowest power-mode system-wise. All device logics are off, including the realtime clock (RTC). The typical battery drain in this mode is 1 µA. The wake-up time in this mode is longer than hibernate at approximately 1.1 seconds.

ADVANCE INFORMATION

Copyright © 2019, Texas Instruments Incorporated

5.5 Restoring Factory Default Configuration

The device has an internal recovery mechanism that allows rolling back the file system to its predefined factory image or restoring the factory default parameters of the device. The factory image is kept in a separate sector on the sFLASH in a secure manner and cannot be accessed from the host processor. The following restore modes are supported:

- None—no factory restore settings
- Enable restore of factory default parameters
- Enable restore of factory image and factory default parameters

The restore process is performed by pulling or forcing SOP[2:0] = 011 pins and toggling the nRESET pin from low to high.

The process is fail-safe and resumes operation if a power failure occurs before the restore is finished. The restore process typically takes about 8 seconds, depending on the attributes of the serial Flash vendor.

5.6 Hostless Mode

The SimpleLink™ Wi-Fi® CC3135MOD device incorporates a scripting ability that enables offloading of simple tasks from the host processor. Using simple and conditional scripts, repetitive tasks can be handled internally, which allows the host processor to remain in a low-power state. In some cases where the scripter is being used to send packets, it reduces code footprint and memory consumption. The *if-this-then-that* style conditioning can include anything from GPIO toggling to transmitting packets.

The conditional scripting abilities can be divided into conditions and actions. The conditions define when to trigger actions. Only one action can be defined per condition, but multiple instances of the same condition may be used, so in effect multiple actions can be defined for a single condition. In total, 16 condition and action pairs can be defined. The conditions can be simple, or complex using sub-conditions (using a combinatorial AND condition between them). The actions are divided into two types, those that can occur during runtime and those that can occur only during the initialization phase.

The following actions can only be performed when triggered by the pre-initialization condition:

- Set roles AP, station, P2P, and Tag modes
- Delete all stored profiles
- Set connection policy
- Hardware GPIO indication allows an I/O to be driven directly from the WLAN core hardware to indicate internal signaling

The following actions may be activated during runtime:

- Send transceiver packet
- Send UDP packet
- Send TCP packet
- Increment counter increments one of the user counters by 1
- Set counter allows setting a specific value to a counter
- Timer control
- Set GPIO allows GPIO output from the device using the internal networking core
- Enter Hibernate state

ADVANCE INFORMATION

Copyright © 2019, Texas Instruments Incorporated

NOTE

Consider the following limitations:

- Timing cannot be ensured when using the network scripter because some variable latency will apply depending on the utilization of the networking core.
- The scripter is limited to 16 pairs of conditions and reactions.
- Both timers and counters are limited to 8 instances each. Timers are limited to a resolution of 1 second. Counters are 32 bits wide.
- Packet length is limited to the size of one packet and the number of possible packet tokens is limited to 8.

5.7 Device Certification and Qualification

The TI CC3135MOD module is certified for FCC, IC/ISED, ETSI/CE, and MIC. Moreover, the module is also Wi-Fi certified with the ability to request a certificate transfer for Wi-Fi alliance members. TI customers that build products based on the TI CC3135MOD can save in testing cost and time per product family.

The CC3135MOD module is certified to the standards listed in Table 5-2 (with IDs where applicable).

Table 5-2. CC3135MOD List of Certifications

REGULATORY BODY	SPECIFICATION	ID (IF APPLICABLE)
FCC (USA)	Part 15C + MPE FCC RF Exposure	XXX-CC3135MOD (In process)
IC/ISED (Canada)	RSS-102 (MPE) and RSS-247 (Wi-Fi)	XXXX-CC3135MOD (In process)
ETSI/CE (Europe)	EN300328 v2.1.1 (2.4 GHz Wi-Fi)	—
	EN62311:2008 (MPE)	—
	EN301489-1 v2.1.1 (EMC General)	—
	EN301489-17 v3.1.1 (EMC Wi-Fi)	—
	EN60950-1:2006/A11:2009/A1:2010/A12:2011/A2:2013	—
Japan MIC	Article 49-20 of ORRE	201-XXXXXX (In process)

ADVANCE INFORMATION

Copyright © 2019, Texas Instruments Incorporated

5.7.1 FCC Certification and Statement

Certification in process.

5.7.2 IC/ISED Certification and Statement

Certification in process.

5.7.3 ETSI/CE Certification

Certification in process.

5.7.4 Japan MIC Certification

Certification in process.

5.8 Module Markings

Figure 5-1 shows the markings for the SimpleLink CC3135 Module.

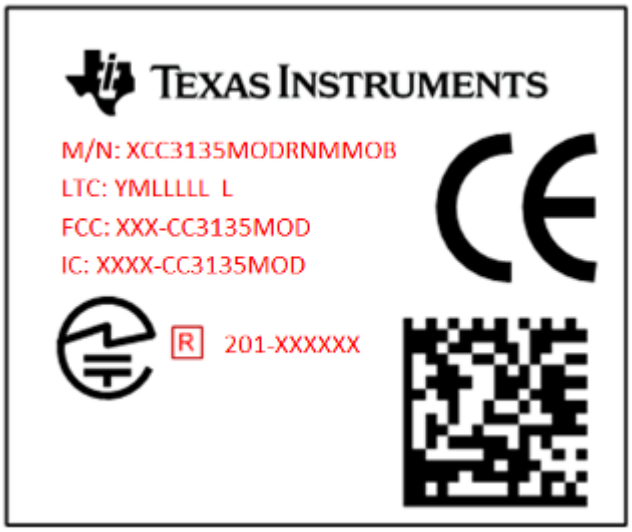

Figure 5-1. SimpleLink™ CC3135 Module Markings

ADVANCE INFORMATION

Copyright © 2019, Texas Instruments Incorporated

Table 5-3 lists the SimpleLink module markings.

Table 5-3. Marking Descriptions

MARKING	DESCRIPTION
XCC3135MODRNMMOB	Model
YMLLLLL L	LTC (Lot Trace Code): • Y = Year • M = Month • LLLLL L = Reserved for internal use
Z64-CC3135MOD	FCC ID: single modular FCC grant ID
451I-CC3135MOD	IC: single modular IC grant ID
	MIC compliance mark
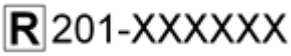	MIC ID: modular MIC grant ID
CE	CE compliance mark

5.9 End Product Labeling

This module is designed to comply with the FCC single modular FCC grant, FCC ID: XXX-CC3135MOD (In process). The host system using this module must display a visible label indicating the following text:

Contains FCC ID: XXX-CC3135MOD

This module is designed to comply with the IC single modular IC grant, IC: XXXX-CC3135MOD (In process). The host system using this module must display a visible label indicating the following text:

Contains IC: XXXX-CC3135MOD

This module is designed to comply with the JP statement, 201-XXXXXX (In process). The host system using this module must display a visible label indicating the following text:

Contains transmitter module with certificate number: 201-XXXXXX.

5.10 Manual Information to the End User

The OEM integrator must be aware not to provide information to the end user regarding how to install or remove this RF module in the user's manual of the end product which integrates this module.

The end user manual must include all required regulatory information/warning as shown in this manual.

ADVANCE INFORMATION

Copyright © 2019, Texas Instruments Incorporated

6 Applications, Implementation, and Layout

NOTE

Information in the following applications sections is not part of the TI component specification, and TI does not warrant its accuracy or completeness. TI's customers are responsible for determining suitability of components for their purposes. Customers should validate and test their design implementation to confirm system functionality.

ADVANCE INFORMATION

Copyright © 2019, Texas Instruments Incorporated

6.1 Application Information

6.1.1 Typical Application

Figure 6-1 shows the typical application schematic using the CC3135MOD module.

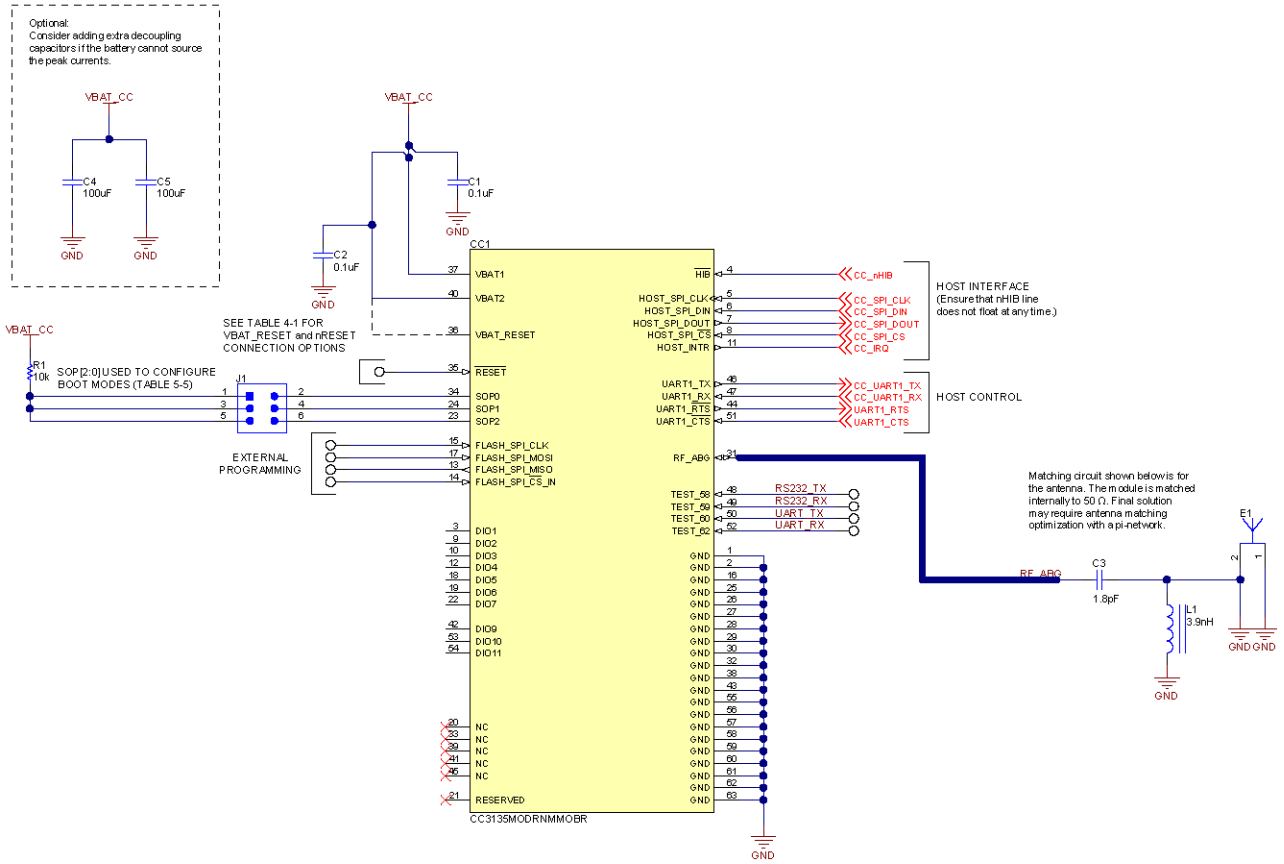

Note: This is the reference schematic and not an actual board design.

Figure 6-1. CC3135MOD Module Reference Schematic

ADVANCE INFORMATION

Table 6-1 lists the bill of materials for a typical application using the CC3135MOD module shown in Figure 6-1.

Table 6-1. Bill of Materials

QTY	PART REFERENCE	VALUE	MANUFACTURER	PART NUMBER	DESCRIPTION
2	C1, C2	0.1 uF	Murata	GRM155R61A104KA01D	Capacitor, ceramic, 0.1 uF, 10 V, ±10%, X5R, 0402
1	C3	1.8 pF	Murata	GJM1555C1H1R8BB01D	Capacitor, ceramic, 1.8 pF, 50 V, ±5%, C0G/NP0, 0402
2	C4, C5	100 uF	Murata	LMK325ABJ107MMHT	Capacitor, ceramic, 100 uF, 10 V, ±20%, X5R, AEC-Q200 Grade 3, 1210
1	E1	2.4 GHz, 5 GHz Ant	Ethertronics	M830520	Antenna Bluetooth WLAN Zigbee®
1	L1	3.9 nH	Murata	LQG15HS3N9S02D	Inductor, Multilayer, Air Core, 3.9nH, 0.75 A, 0.14 Ω, SMD
1	R1	10k	Vishay-Dale	CRCW040210K0JNED	RES, 10 k, 5%, 0.063 W, AEC-Q200 Grade 0, 0402
1	CC1	CC3135MOD	Texas Instruments	CC3135MODRNMMOBR	SimpleLink™ Certified Wi-Fi® Dual-Band Network Processor Internet-of-Things Module Solution for MCU Applications, MOB0063A

ADVANCE INFORMATION

Copyright © 2019, Texas Instruments Incorporated

6.1.2 Power Supply Decoupling and Bulk Capacitors

Depending upon routing resistors and battery type, TI recommends adding two 100-µF ceramic capacitors to help provide the peak current drawn by the CC3135MOD module.

NOTE

The module enters a brown-out condition whenever the input voltage dips below V_{BROWN} (see Figure 4-4 and Figure 4-5). This condition must be considered during design of the power supply routing specifically if operating from a battery. For more details on brown-out consideration, see Section 4.8.

6.1.3 Reset

The module features an internal RC circuit to reset the device during power ON. The nRESET pin must be held below 0.6 V for at least 5 ms for the device to successfully reset.

6.1.4 Unused Pins

All unused pins can be left unconnected without any concern to leakage current.

6.2 PCB Layout Guidelines

This section details the PCB guidelines to speed up the PCB design using the CC3135MOD Module. The integrator of the CC3135MOD module must comply with the PCB layout recommendations described in the following subsections to preserve/minimize the risk with regulatory certifications for FCC, IC, CE, and MIC. Moreover, TI recommends customers follow the guidelines described in this section to achieve similar performance to that obtained with the TI reference design.

6.2.1 General Layout Recommendations

Ensure that the following general layout recommendations are followed:

- Have a solid ground plane and ground vias under the module for stable system and thermal dissipation.
- Do **not** run signal traces underneath the module on a layer where the module is mounted.
- RF traces must have 50-Ω impedance.
- RF trace bends must be made with gradual curves, and 90 degree bends must be avoided.
- RF traces must **not** have sharp corners.
- There must be no traces or ground under the antenna section.
- RF traces must have via stitching on the ground plane beside the RF trace on both sides.
- RF traces must be as short as possible. The antenna, RF traces, and the module must be on the edge of the PCB product in consideration of the product enclosure material and proximity.

ADVANCE INFORMATION

6.2.2 RF Layout Recommendations

The RF section of this wireless device gets top priority in terms of layout. It is very important for the RF section to be laid out correctly to ensure optimum performance from the device. A poor layout can cause low-output power, EVM degradation, sensitivity degradation, and mask violations.

Figure 6-2 shows the RF placement and routing of the CC3135MOD module.

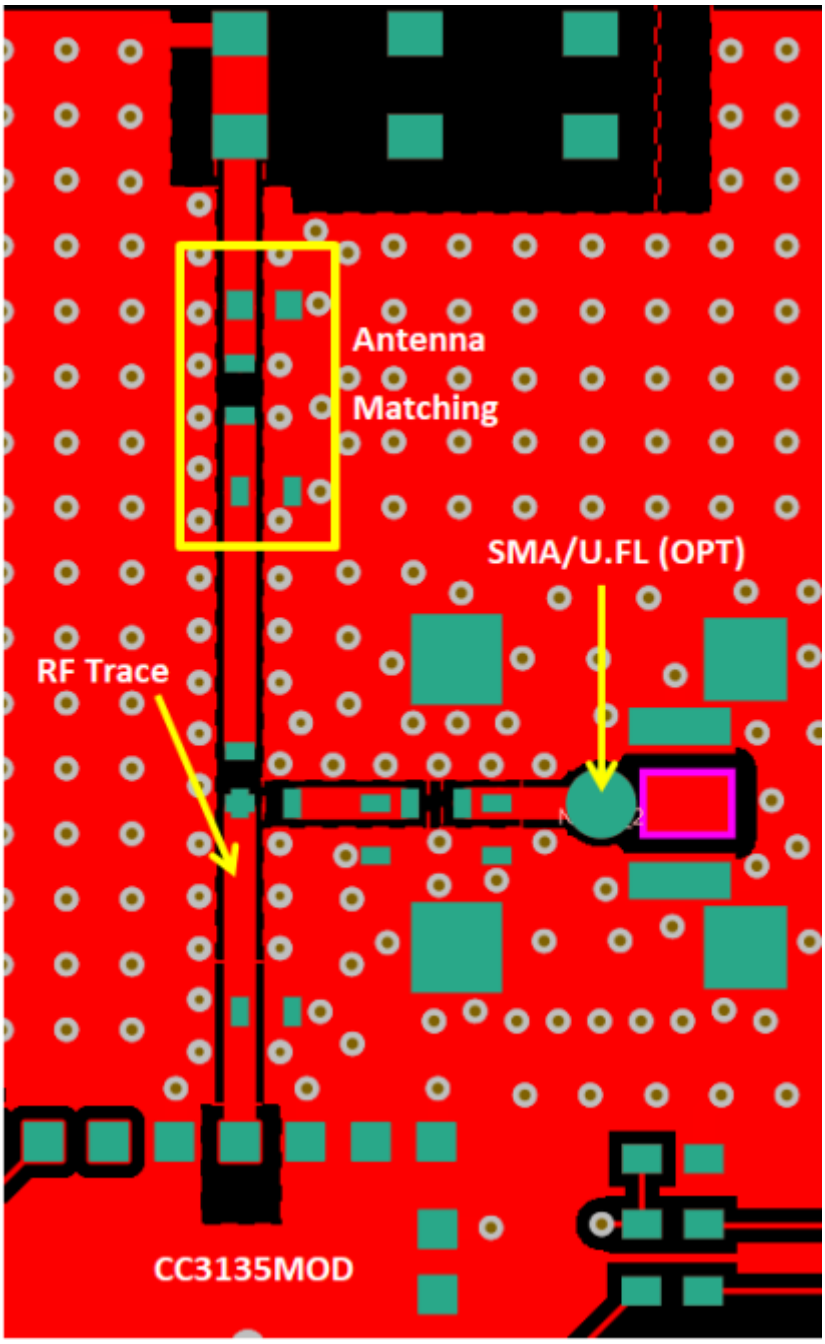

Figure 6-2. RF Section Layout

ADVANCE INFORMATION

Copyright © 2019, Texas Instruments Incorporated

For optimal RF performance, ensure the copper cut out on the top layer under the RF-BG pin, (pin 31), is as shown in Figure 6-3.

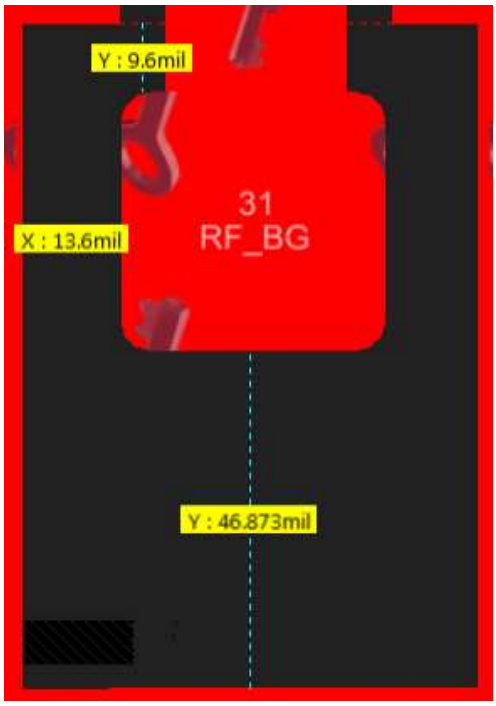

Figure 6-3. Top Layer Copper Pull Back on RF Pads

ADVANCE INFORMATION

6.2.3 Antenna Placement and Routing

The antenna is the element used to convert the guided waves on the PCB traces to the free space electromagnetic radiation. The placement and layout of the antenna are the keys to increased range and data rates. Table 6-2 provides a summary of the recommended antennas to use with the CC3135MOD module.

Table 6-2. Antenna Guidelines

SR NO.	GUIDELINES
1	Place the antenna on an edge or corner of the PCB.
2	Ensure that no signals are routed across the antenna elements on all the layers of the PCB.
3	Most antennas, including the chip antenna used on the booster pack, require ground clearance on all the layers of the PCB. Ensure that the ground is cleared on inner layers as well.
4	Ensure that there is provision to place matching components for the antenna. These must be tuned for best return loss when the complete board is assembled. Any plastics or casing must also be mounted while tuning the antenna because this can impact the impedance.
5	Ensure that the antenna impedance is 50 Ω because the device is rated to work only with a 50-Ω system.
6	In case of printed antenna, ensure that the simulation is performed with the solder mask in consideration.
7	Ensure that the antenna has a near omni-directional pattern.
8	The feed point of the antenna is required to be grounded. Refer to the specific antenna data sheets for the recommendations.

Table 6-3 lists the recommended antennas to use with the CC3135MOD module. Other antennas may be available for use with the CC3135MOD module. See the *CC3135 and CC3235 Radio Certifications* wiki page (In Process).

Table 6-3. Recommended Components

CHOICE	PART NUMBER	MANUFACTURER	NOTES
1	M830520	Ethertronics	Can be placed at the edge of the PCB using the least amount of PCB area.

ADVANCE INFORMATION

Copyright © 2019, Texas Instruments Incorporated

6.2.4 Transmission Line Considerations

The RF signal from the device is routed to the antenna using a Coplanar Waveguide with ground (CPW-G) structure. CPW-G structure offers the maximum amount of isolation and the best possible shielding to the RF lines. In addition to the ground on the L1 layer, placing GND vias along the line also provides additional shielding. Figure 6-4 shows a cross section of the coplanar waveguide with the critical dimensions.

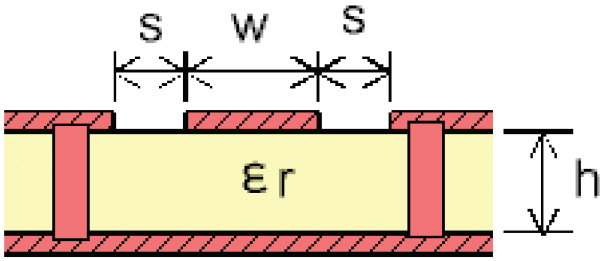

Figure 6-4. Coplanar Waveguide (Cross Section)

Figure 6-5 shows the top view of the coplanar waveguide with GND and via stitching.

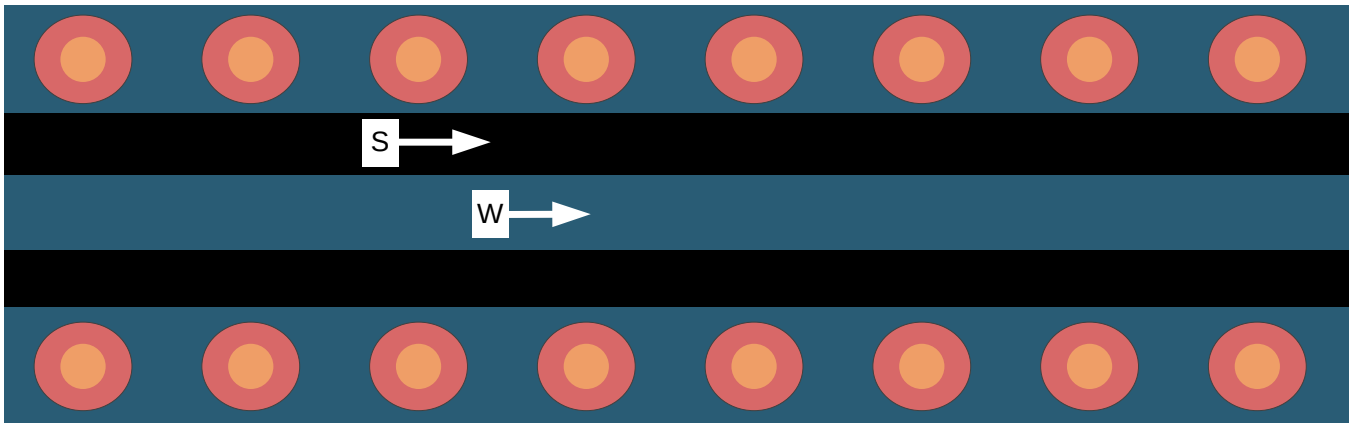

Figure 6-5. CPW With GND and Via Stitching (Top View)

ADVANCE INFORMATION

The recommended values for the PCB are provided for 2-layer boards in Table 6-4 and 4-layer boards in Table 6-5.

Table 6-4. Recommended PCB Values for 2-Layer Board (L1 to L2 = 42.1 mils)

PARAMETER	VALUE	UNIT
W	26	mils
S	5.5	mils
H	42.1	mils
Er (FR-4 substrate)	4.2	F/m

Table 6-5. Recommended PCB Values for 4-Layer Board (L1 to L2 = 16 mils)

PARAMETER	VALUE	UNITS
W	21	mils
S	10	mils
H	16	mils
Er (FR-4 substrate)	4.5	F/m

ADVANCE INFORMATION

Copyright © 2019, Texas Instruments Incorporated

7 Environmental Requirements and Specifications

7.1 Temperature

7.1.1 PCB Bending

The PCB bending specification will maintain planeness at a thickness of less than 0.1 mm.

7.2 Handling Environment

7.2.1 Terminals

The product is mounted with motherboard through land-grid array (LGA). To prevent poor soldering, do not touch the LGA portion by hand.

7.2.2 Falling

The mounted components will be damaged if the product falls or is dropped. Such damage may cause the product to malfunction.

7.3 Storage Condition

7.3.1 Moisture Barrier Bag Before Opened

A moisture barrier bag must be stored in a temperature of less than 30°C with humidity under 85% RH. The calculated shelf life for the dry-packed product will be 12 months from the date the bag is sealed.

7.3.2 Moisture Barrier Bag Open

Humidity indicator cards must be blue, < 30%.

7.4 Baking Conditions

Products require baking before mounting if:

- Humidity indicator cards read > 30%
- Temp < 30°C, humidity < 70% RH, over 96 hours

Baking condition: 90°C, 12–24 hours

Baking times: 1 time

ADVANCE INFORMATION

Copyright © 2019, Texas Instruments Incorporated

7.5 Soldering and Reflow Condition

- Heating method: Conventional convection or IR convection
- Temperature measurement: Thermocouple d = 0.1 mm to 0.2 mm CA (K) or CC (T) at soldering portion or equivalent method
- Solder paste composition: Sn/3.0 Ag/0.5 Cu
- Allowable reflow soldering times: 2 times based on the reflow soldering profile (see Figure 7-1)
- Temperature profile: Reflow soldering will be done according to the temperature profile (see Figure 7-1)
- Peak temp: 245°C

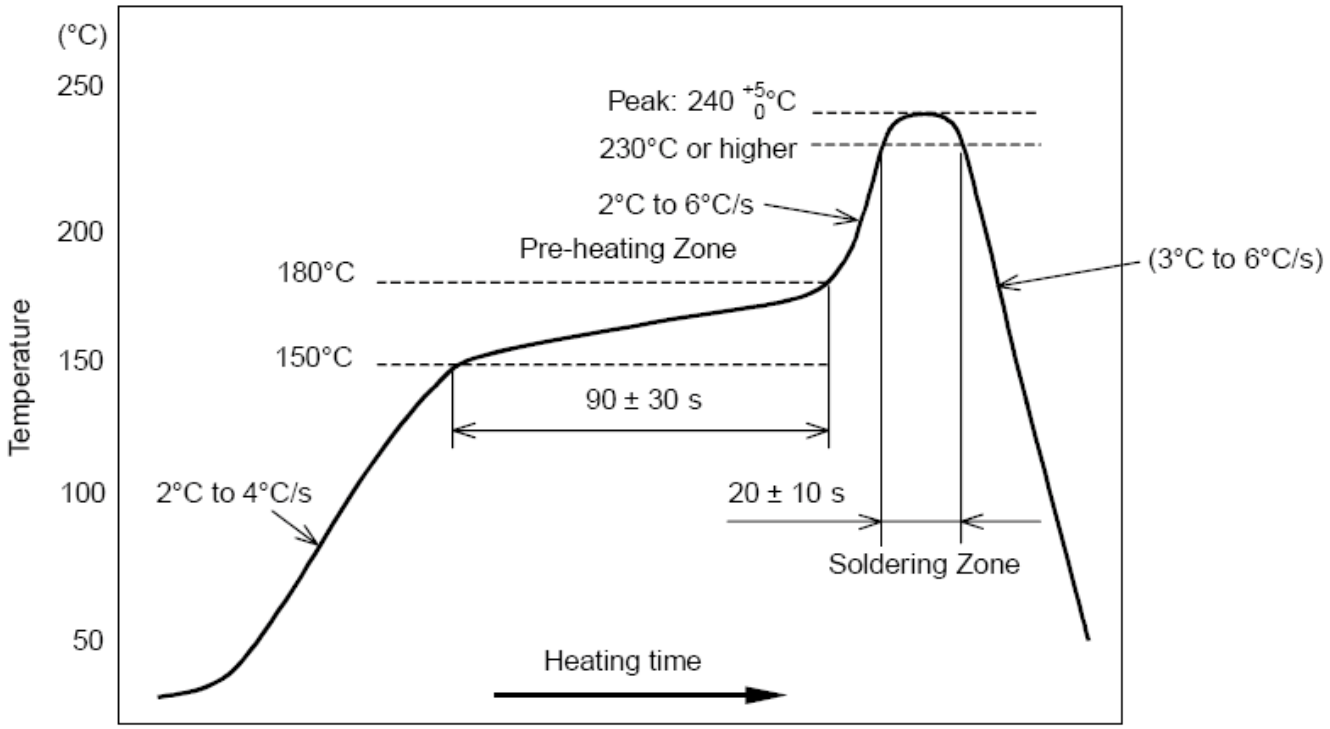

Figure 7-1. Temperature Profile for Evaluation of Solder Heat Resistance of a Component (at Solder Joint)

NOTE

TI does not recommend the use of conformal coating or similar material on the SimpleLink module. This coating can lead to localized stress on the WCSP solder connections inside the module and impact the device reliability. Use caution during the module assembly process to the final PCB to avoid the presence of foreign material inside the module.

ADVANCE INFORMATION

Copyright © 2019, Texas Instruments Incorporated

8 Device and Documentation Support

TI offers an extensive line of development tools. Tools and software to evaluate the performance of the device, generate code, and develop solutions are listed in this section.

8.1 Device Nomenclature

To designate the stages in the product development cycle, TI assigns prefixes to the part numbers of the CC3135MOD and support tools (see Figure 8-1).

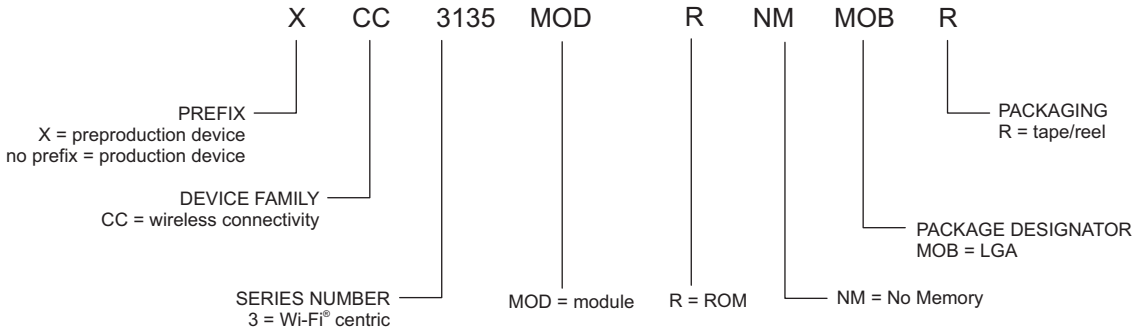

Figure 8-1. CC3135MOD Module Nomenclature

For orderable part numbers of CC3135MOD modules in the MOB package types, see the Package Option Addendum of this document, the TI website (www.ti.com), or contact your TI sales representative.

8.2 Development Tools and Software

For the most up-to-date list of development tools and software, visit the CC3135MOD tools and software page. You can also click on the Alert me button in the top-right corner of the page to stay informed about updates related to the CC3135MOD.

SimpleLink™ Wi-Fi® Starter Pro The supported devices are: CC3100, CC3200, CC3120R, CC3220x, CC3135 and CC3235x. The SimpleLink Wi-Fi Starter Pro mobile App is a new mobile application for SimpleLink provisioning. The app goes along with the embedded provisioning library and example that runs on the device side (see SimpleLink™ Wi-Fi® CC3135 SDK plugin) and TI SimpleLink™ Wi-Fi® CC3235 Software Development Kit (SDK). The new provisioning release is a TI recommendation for Wi-Fi provisioning using SimpleLink Wi-Fi products. The provisioning release implements advanced AP mode and SmartConfig technology provisioning with feedback and fallback options to ensure successful process has been accomplished. Customers can use both embedded library and the mobile library for integration to their end products.

SimpleLink™ Wi-Fi® CC3135 SDK Plugin The CC3135 SDK contains drivers, many sample applications for Wi-Fi features and internet, and documentation needed to use the CC3135 Internet-on-a chip solution. This SDK can be used with TI's MSP432P401R LaunchPad™, or SimpleLink Studio, a PC tool that allows MCU development with the CC3135. You can also use the SDK as example code for any platform. All sample applications in the SDK are supported on TI's MSP432P401R ultra-low-power MCUs with Code Composer Studio™ IDE and TI RTOS. In addition, many of the applications support IAR.

SimpleLink™ Studio for CC31xx SimpleLink™ Studio for CC31xx is a Windows®-based software tool used to aid in the development of embedded networking applications and software for microcontrollers. Using SimpleLink Studio for CC31xx, embedded software developers can develop and test applications using any desktop IDE, such as Visual Studio or Eclipse, and connect their applications to the cloud using the CC31xx BoosterPack™. The application can then be easily ported to any microcontroller. With the SimpleLink Wi-Fi CC31xx solution, customers now have the flexibility to add Wi-Fi to any microcontroller (MCU). This Internet-on-a chip solution contains all you need to easily create IoT solutions – security, quick connection, cloud support and more. For more information on CC31xx devices, visit http://www.ti.com/simplelinkwifi.

SimpleLink™ Wi-Fi® Radio Testing Tool The supported devices are: CC3100, CC3200, CC3120R,

ADVANCE INFORMATION

Copyright © 2019, Texas Instruments Incorporated

CC3220, CC3135, and CC3235x. The SimpleLink Wi-Fi Radio Testing Tool is a Windows-based software tool for RF evaluation and testing of SimpleLink Wi-Fi CC3x20 and CC3x35 designs during development and certification. The tool enables low-level radio testing capabilities by manually setting the radio into transmit or receive modes. Using the tool requires familiarity and knowledge of radio circuit theory and radio test methods. Created for the internet-of-things (IoT), the SimpleLink Wi-Fi CC31xx and CC32xx family of devices include on-chip Wi-Fi, Internet, and robust security protocols with no prior Wi-Fi experience needed for faster development. For more information on these devices, visit SimpleLink™ Wi-Fi® family, Internet-on-a chip™ solutions.

Uniflash Standalone Flash Tool for TI Microcontrollers (MCU), Sitara Processors and SimpleLink™ Devices CCS Uniflash is a standalone tool used to program on-chip flash memory on TI MCUs and on-board flash memory for Sitara processors. Uniflash has a GUI, command line, and scripting interface. CCS Uniflash is available free of charge.

8.3 Firmware Updates

TI updates features in the service pack for this module with no published schedule. Due to the ongoing changes, TI recommends that users have the latest service pack in their module for production.

To stay informed, sign up with the SDK Alert me button in the top-right corner of the product page or visit here.

8.4 Documentation Support

To receive notification of documentation updates — including silicon errata — go to the CC3135MOD product folder on ti.com, and click the Alert me button in the upper-right corner. This registers you to receive a weekly digest of updated product information (if any). For change details, check the revision history of any revised document. The current documentation which describes the processor, related peripherals, and other technical collateral follows. The following documents provide support for the CC3135MOD module.

Application Reports

Transfer of TI's Wi-Fi® Alliance Certifications to Products Based on SimpleLink™ This document explains how to employ the Wi-Fi® Alliance (WFA) derivative certification transfer policy to transfer a WFA certification, already obtained by Texas Instruments, to a system you have developed.

SimpleLink™ CC31xx/CC32xx Wi-Fi® Internet-on-a chip™ Solution Built-In Security Features The SimpleLink Wi-Fi CC31xx and CC32xx Internet-on-a chip™ family of devices from Texas Instruments offers a wide range of built-in security features to help developers address a variety of security needs, which is achieved without any processing burden on the main microcontroller (MCU). This document describes these security-related features and provides recommendations for leveraging each in the context of practical system implementation.

Using Serial Flash on SimpleLink™ CC3135/CC3235 Wi-Fi® and Internet-of-Things Devices This application note is divided into two parts. The first part provides important guidelines and best- practice design techniques to consider when choosing and embedding a serial flash paired with the CC3135 and CC3235 devices. The second part describes the file system, along with guidelines and considerations for system designers working with the CC3x20 devices.

SimpleLink™ CC3135/CC3235 Over-the-Air Programming This document describes the OTA library for the SimpleLink™ Wi-Fi® CC3x35 family of devices from Texas Instruments and explains how to prepare a new cloud-ready update to be downloaded by the OTA library.

SimpleLink™ CC3x35 Wi-Fi® Internet-on-a chip™ Solution Device Provisioning This guide describes the provisioning process, which provides the SimpleLink Wi-Fi device with the information (network name, password, and so forth) needed to connect to a wireless network.

SimpleLink™ CC31xx/CC32xx Wi-Fi® Internet-on-a chip™ Networking Sub-System Power Management
This application report describes the best practices for power management and extended battery life for embedded low-power Wi-Fi devices such as the SimpleLink Wi-Fi Internet-on-a chip™ solution from Texas Instruments.

ADVANCE INFORMATION

Copyright © 2019, Texas Instruments Incorporated

User's Guides

CC3135 and CC3235 SimpleLink™ Wi-Fi® Embedded Programming User Guide CC3135 and CC3235 SimpleLink Wi-Fi Embedded Programming User Guide

UniFlash SimpleLink™ CC31xx/32xx Wi-Fi® and IoC™ Solution ImageCreator and Pro This document describes the installation, operation, and usage of the SimpleLink ImageCreator tool as part of the UniFlash.

SimpleLink™ Wi-Fi® and Internet-of-Things CC31xx and CC32xx Network Processor This document provides software (SW) programmers with all of the required knowledge for working with the networking subsystem of the SimpleLink Wi-Fi devices. This guide provides basic guidelines for writing robust, optimized networking host applications, and describes the capabilities of the networking subsystem. The guide contains some example code snapshots, to give users an idea of how to work with the host driver. More comprehensive code examples can be found in the formal software development kit (SDK). This guide does not provide a detailed description of the host driver APIs.

SimpleLink™ Wi-Fi® CC3135 and CC3235 Provisioning for Mobile Applications This guide describes TI's SimpleLink Wi-Fi provisioning solution for mobile applications, specifically on the usage of the Android™ and IOS® building blocks for UI requirements, networking, and provisioning APIs required for building the mobile application.

SimpleLink™ Wi-Fi® and Internet-on-a chip™ CC3135 and CC3235 Solution Radio Tool The Radio Tool serves as a control panel for direct access to the radio, and can be used for both the radio frequency (RF) evaluation and for certification purposes. This guide describes how to have the tool work seamlessly on Texas Instruments evaluation platforms such as the BoosterPack™ plus FTDI emulation board for CC3235 devices, and the LaunchPad™ for CC3235 devices.

ADVANCE INFORMATION

Copyright © 2019, Texas Instruments Incorporated

8.5 Trademarks

LaunchPad, Code Composer Studio, BoosterPack, Internet-on-a chip are trademarks of Texas Instruments.
Cortex is a registered trademark of ARM Limited.
IOS is a registered trademark of Cisco.
Android is a trademark of Google LLC.
WPA, WPA2 are trademarks of Wi-Fi Alliance.
Wi-Fi Direct is a registered trademark of Wi-Fi Alliance.

8.6 Electrostatic Discharge Caution



This integrated circuit can be damaged by ESD. Texas Instruments recommends that all integrated circuits be handled with appropriate precautions. Failure to observe proper handling and installation procedures can cause damage.

ESD damage can range from subtle performance degradation to complete device failure. Precision integrated circuits may be more susceptible to damage because very small parametric changes could cause the device not to meet its published specifications.

8.7 Export Control Notice

Recipient agrees to not knowingly export or re-export, directly or indirectly, any product or technical data (as defined by the U.S., EU, and other Export Administration Regulations) including software, or any controlled product restricted by other applicable national regulations, received from disclosing party under nondisclosure obligations (if any), or any direct product of such technology, to any destination to which such export or re-export is restricted or prohibited by U.S. or other applicable laws, without obtaining prior authorization from U.S. Department of Commerce and other competent Government authorities to the extent required by those laws.

8.8 Glossary

TI Glossary This glossary lists and explains terms, acronyms, and definitions.

ADVANCE INFORMATION

Copyright © 2019, Texas Instruments Incorporated

9 Mechanical, Packaging, and Orderable Information

The following pages include mechanical packaging and orderable information. This information is the most current data available for the designated devices. This data is subject to change without notice and revision of this document.

9.1 Mechanical, Land, and Solder Paste Drawings

NOTE

1. The total height of the module is 2.45 mm.
2. The weight of the module is 0.00175 kg ±5%.

NOTE

1. All dimensions are in mm.
2. Solder mask should be the same or 5% larger than the dimension of the pad
3. Solder paste must be the same as the pin for all peripheral pads. For ground pins, make the solder paste 20% smaller than the pad.

ADVANCE INFORMATION

9.2 Package Option Addendum

The CC3135MODx is only offered in a 1000-unit reel.

9.2.1 Packaging Information

Orderable Device	Status (1)	Package Type	Package Drawing	Pins	Package Qty	Eco Plan (2)	Lead/Ball Finish	MSL, Peak Temp (3)	Op Temp (°C)	Device Marking (4) (5)
XCC3135MODRNMMOBR	PREVIEW	QFM	MOB	63	1000	Green (RoHS and no Sb/Br)	Ni, AU	3, 250°C	–40 to 85	XCC3135MODRNMMOB

(1) The marketing status values are defined as follows:
ACTIVE: Product device recommended for new designs.
LIFEBUY: TI has announced that the device will be discontinued, and a lifetime-buy period is in effect.
NRND: Not recommended for new designs. Device is in production to support existing customers, but TI does not recommend using this part in a new design.
PRE_PROD Unannounced device, not in production, not available for mass market, nor on the web, samples not available.
PREVIEW: Device has been announced but is not in production. Samples may or may not be available.
OBSOLETE: TI has discontinued the production of the device.

(2) Eco Plan - The planned eco-friendly classification: Pb-Free (RoHS), Pb-Free (RoHS Exempt), or Green (RoHS & no Sb/Br) - please check http://www.ti.com/productcontent for the latest availability information and additional product content details.
Pb-Free (RoHS): TI's terms "Lead-Free" or "Pb-Free" mean semiconductor products that are compatible with the current RoHS requirements for all 6 substances, including the requirement that lead not exceed 0.1% by weight in homogeneous materials. Where designed to be soldered at high temperatures, TI Pb-Free products are suitable for use in specified lead-free processes.
Pb-Free (RoHS Exempt): This component has a RoHS exemption for either 1) lead-based flip-chip solder bumps used between the die and package, or 2) lead-based die adhesive used between the die and leadframe. The component is otherwise considered Pb-Free (RoHS compatible) as defined above.
Green (RoHS & no Sb/Br): TI defines "Green" to mean Pb-Free (RoHS compatible), and free of Bromine (Br) and Antimony (Sb) based flame retardants (Br or Sb do not exceed 0.1% by weight in homogeneous material)

(3) MSL, Peak Temp. -- The Moisture Sensitivity Level rating according to the JEDEC industry standard classifications, and peak solder temperature.

(4) There may be additional marking, which relates to the logo, the lot trace code information, or the environmental category on the device

(5) Multiple Device markings will be inside parentheses. Only on Device Marking contained in parentheses and separated by a "~" will appear on a device. If a line is indented then it is a continuation of the previous line and the two combined represent the entire Device Marking for that device.

Important Information and Disclaimer: The information provided on this page represents TI's knowledge and belief as of the date that it is provided. TI bases its knowledge and belief on information provided by third parties, and makes no representation or warranty as to the accuracy of such information. Efforts are underway to better integrate information from third parties. TI has taken and continues to take reasonable steps to provide representative and accurate information but may not have conducted destructive testing or chemical analysis on incoming materials and chemicals. TI and TI suppliers consider certain information to be proprietary, and thus CAS numbers and other limited information may not be available for release. In no event shall TI's liability arising out of such information exceed the total purchase price of the TI part(s) at issue in this document sold by TI to Customer on an annual basis.

ADVANCE INFORMATION

Copyright © 2019, Texas Instruments Incorporated

PACKAGE OUTLINE

MOB0063A

QFM - 2.45 mm max height

QUAD FLAT MODULE

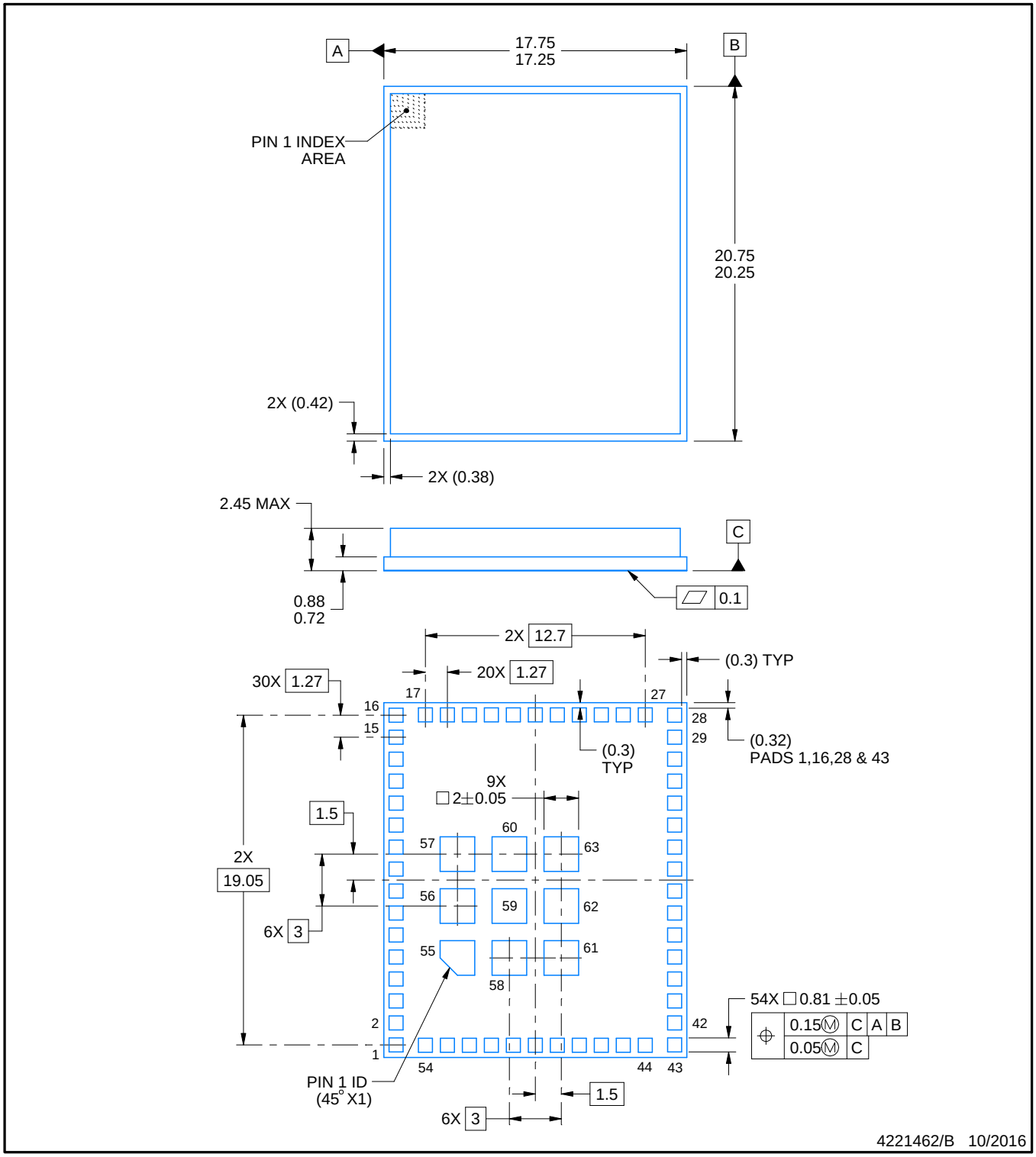

NOTES:

1. All linear dimensions are in millimeters. Any dimensions in parenthesis are for reference only. Dimensioning and tolerancing per ASME Y14.5M.
2. This drawing is subject to change without notice.

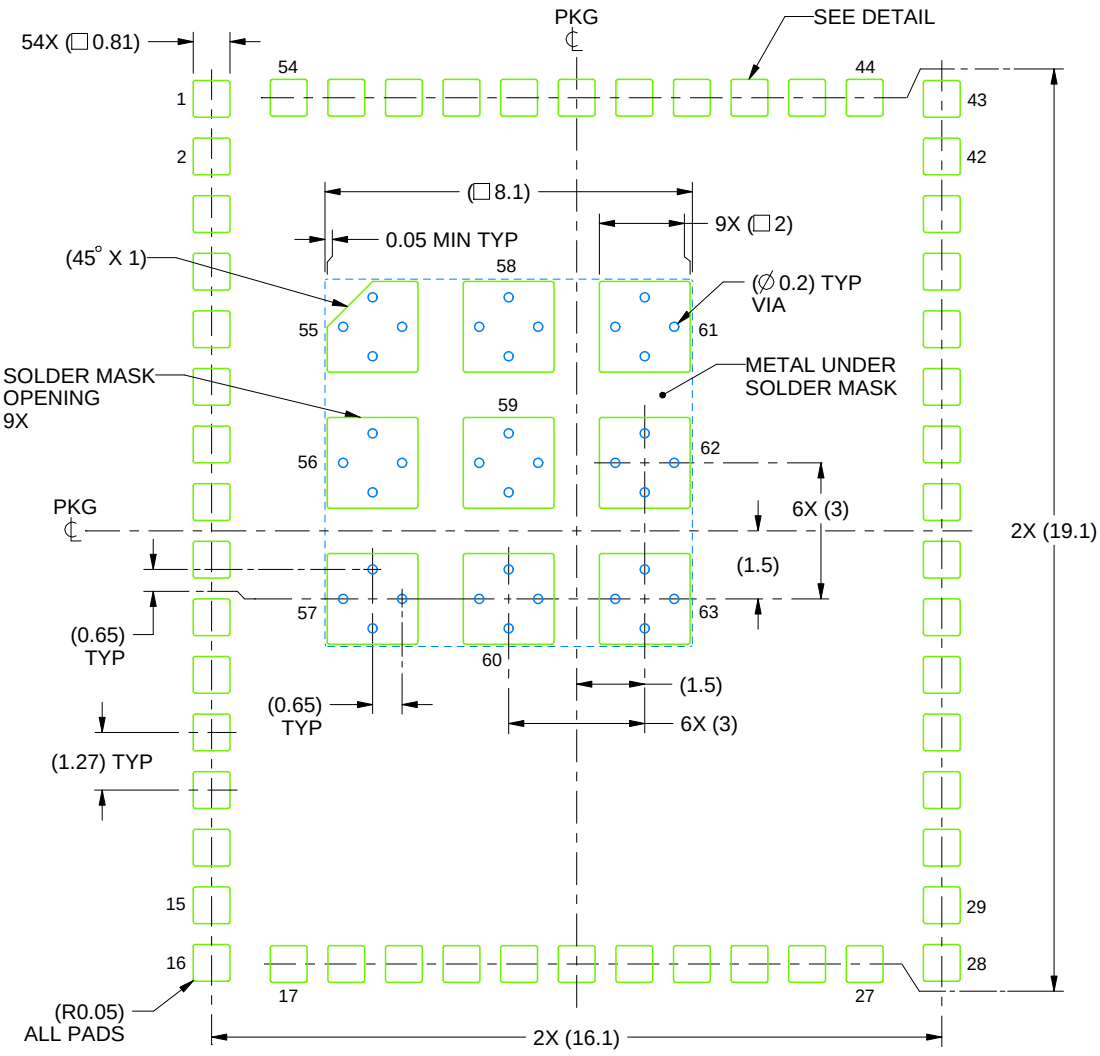

LAND PATTERN EXAMPLE
SOLDER MASK DEFINED
SCALE:6X

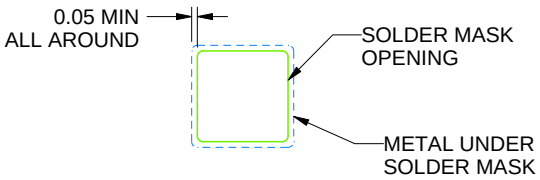

SIGNAL PADS DETAIL

4221462/B 10/2016

NOTES: (continued)

3. This package is designed to be soldered to a thermal pad on the board. For more information, see Texas Instruments literature number SLUA271 (www.ti.com/lit/slua271).

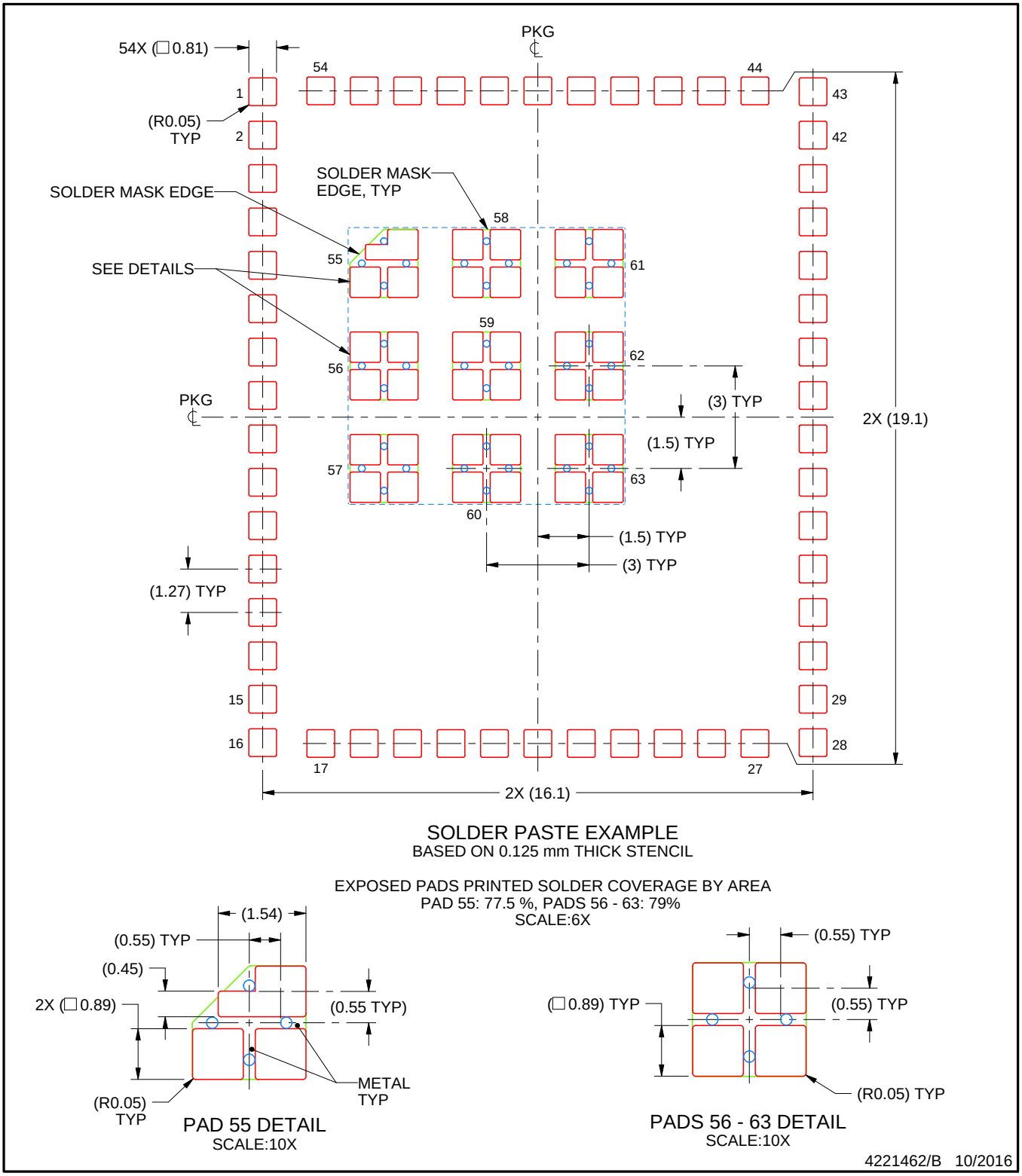

NOTES: (continued)

4. Laser cutting apertures with trapezoidal walls and rounded corners may offer better paste release. IPC-7525 may have alternate design recommendations.

IMPORTANT NOTICE AND DISCLAIMER

TI PROVIDES TECHNICAL AND RELIABILITY DATA (INCLUDING DATASHEETS), DESIGN RESOURCES (INCLUDING REFERENCE DESIGNS), APPLICATION OR OTHER DESIGN ADVICE, WEB TOOLS, SAFETY INFORMATION, AND OTHER RESOURCES “AS IS” AND WITH ALL FAULTS, AND DISCLAIMS ALL WARRANTIES, EXPRESS AND IMPLIED, INCLUDING WITHOUT LIMITATION ANY IMPLIED WARRANTIES OF MERCHANTABILITY, FITNESS FOR A PARTICULAR PURPOSE OR NON-INFRINGEMENT OF THIRD PARTY INTELLECTUAL PROPERTY RIGHTS.

These resources are intended for skilled developers designing with TI products. You are solely responsible for (1) selecting the appropriate TI products for your application, (2) designing, validating and testing your application, and (3) ensuring your application meets applicable standards, and any other safety, security, or other requirements. These resources are subject to change without notice. TI grants you permission to use these resources only for development of an application that uses the TI products described in the resource. Other reproduction and display of these resources is prohibited. No license is granted to any other TI intellectual property right or to any third party intellectual property right. TI disclaims responsibility for, and you will fully indemnify TI and its representatives against, any claims, damages, costs, losses, and liabilities arising out of your use of these resources.

TI’s products are provided subject to TI’s Terms of Sale (www.ti.com/legal/termsofsale.html) or other applicable terms available either on ti.com or provided in conjunction with such TI products. TI’s provision of these resources does not expand or otherwise alter TI’s applicable warranties or warranty disclaimers for TI products.

Mailing Address: Texas Instruments, Post Office Box 655303, Dallas, Texas 75265
Copyright © 2019, Texas Instruments Incorporated