CC1201 Low-Power, High-Performance RF Transceiver

1 Device Overview

1.1 Features

- RF Performance and Analog Features:
  - High-Performance, Single-Chip Transceiver
    - Excellent Receiver Sensitivity:
      - –120 dBm at 1.2 kbps
      - –109 dBm at 50 kbps
    - Blocking Performance: 85 dB at 10 MHz
    - Adjacent Channel Selectivity: Up to 62 dB at 50-kHz Offset
    - Very Low Phase Noise: –114 dBc/Hz at 10-kHz Offset (169 MHz)
  - Programmable Output Power Up to +16 dBm With 0.4-dB Step Size
  - Automatic Output Power Ramping
  - Supported Modulation Formats: 2-FSK, 2-GFSK, 4-FSK, 4-GFSK, MSK, OOK
  - Supports Data Rate Up to 1.25 Mbps in Transmit and Receive
- Low Current Consumption:
  - Enhanced Wake-On-Radio (eWOR) Functionality for Automatic Low-Power Receive Polling
  - Power Down: 0.12 µA (0.5 µA With eWOR Timer Active)
    - RX: 0.5 mA in RX Sniff Mode
    - RX: 19 mA Peak Current in Low-Power Mode
    - RX: 23 mA Peak Current in High-Performance Mode
    - TX: 46 mA at +14 dBm
- Other:
  - Data FIFOs: Separate 128-Byte RX and TX
  - Support for Seamless Integration With the CC1190 Device for Increased Range Providing up to 3-dB Improvement in RX Sensitivity and up to +27 dBm TX Output Power
- Digital Features:
  - WaveMatch: Advanced Digital Signal Processing for Improved Sync Detect Performance
  - Autonomous Image Removal
  - Security: Hardware AES128 Accelerator
  - Data FIFOs: Separate 128-Byte RX and TX
  - Includes Functions for Antenna Diversity Support
  - Support for Retransmission
  - Support for Auto-Acknowledge of Received Packets
  - Automatic Clear Channel Assessment (CCA) for Listen-Before-Talk (LBT) Systems
  - Built-in Coding Gain Support for Increased Range and Robustness
  - Digital RSSI Measurement
  - Improved OOK Shaping for Less Occupied Bandwidth, Enabling Higher Output Power While Meeting Regulatory Requirements
- Dedicated Packet Handling for 802.15.4g:
  - CRC 16/32
  - FEC, Dual Sync Detection (FEC and non-FEC Packets)
  - Whitening
- General:
  - RoHS-Compliant 5-mm × 5-mm No-Lead QFN 32-Pin Package (RHB)
  - Pin-Compatible With the CC1120 Device
- Regulations – Suitable for Systems Targeting Compliance With:
  - **Europe**: ETSI EN 300 220
  - **US**: FCC CFR47 Part 15
  - **Japan:** ARIB STD-T108

1.2 Applications

- Low-Power, High-Performance, Wireless Systems With Data Rate up to 1250 kbps
- ISM/SRD Bands: 169, 433, 868, 915, and 920 MHz
- Possible Support for Additional Frequency Bands: 137 to 158.3 MHz, 205 to 237.5 MHz, and 274 to 316.6 MHz
- Smart Metering (AMR/AMI)
- Home and Building Automation
- Wireless Alarm and Security Systems
- Industrial Monitoring and Control
- Wireless Healthcare Applications
- Wireless Sensor Networks and Active RFID
- IEEE 802.15.4g Applications

An IMPORTANT NOTICE at the end of this data sheet addresses availability, warranty, changes, use in safety-critical applications, intellectual property matters and other important disclaimers. PRODUCTION DATA.

1.3 Description

The CC1201 device is a fully integrated single-chip radio transceiver designed for high performance at very low-power and low-voltage operation in cost-effective wireless systems. All filters are integrated, thus removing the need for costly external SAW and IF filters. The device is mainly intended for the ISM (Industrial, Scientific, and Medical) and SRD (Short Range Device) frequency bands at 164–190 MHz, 410–475 MHz, and 820–950 MHz.

The CC1201 device provides extensive hardware support for packet handling, data buffering, burst transmissions, clear channel assessment, link quality indication, and Wake-On-Radio. The main operating parameters of the CC1201 device can be controlled through an SPI interface. In a typical system, the CC1201 device will be used with a microcontroller and only few external passive components.

The CC1201 offers the same performance as the CC1200 for channel filter bandwidths of 50 kHz or more, and therefore presents a lower cost option for applications that do not require narrowband support.

Device Information(1)

PART NUMBER	PACKAGE	BODY SIZE
CC1201RHB	VQFN (32)	5.00 mm x 5.00 mm

(1) For more information, see Section 8, *Mechanical Packaging and Orderable Information*

1.4 Functional Block Diagram

Figure 1-1 shows the system block diagram of the CC120x family of devices.

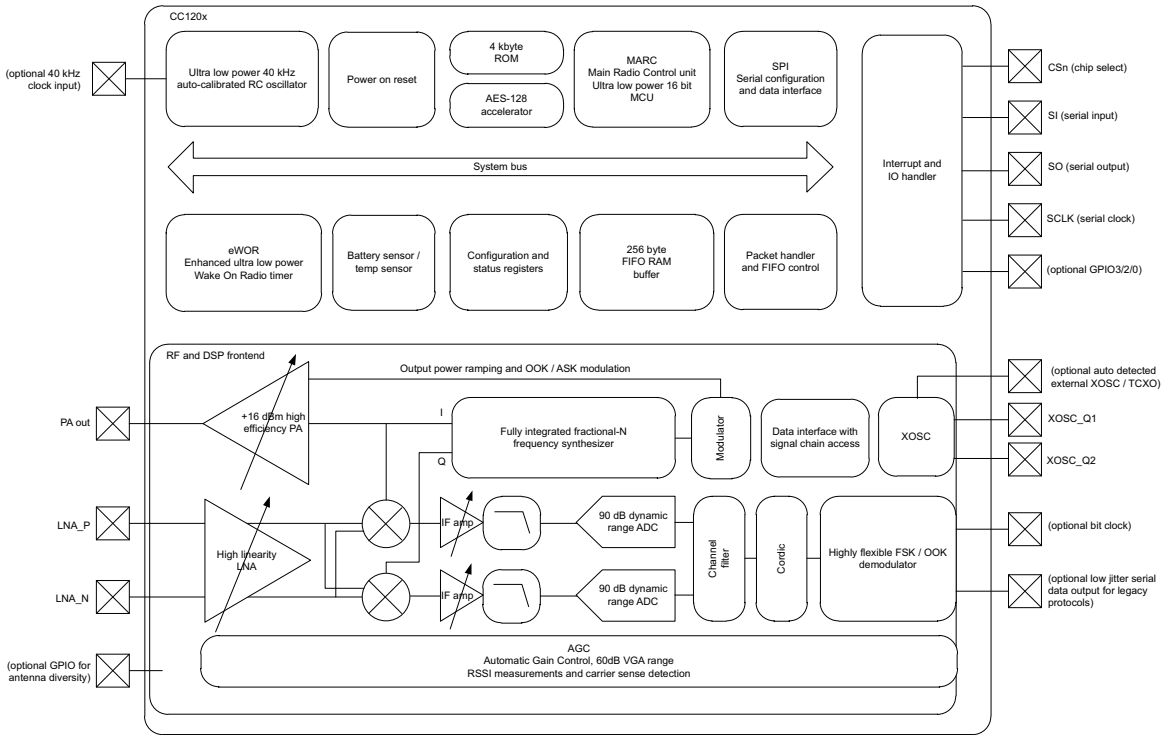

Figure 1-1. System Block Diagram

Copyright © 2013–2014, Texas Instruments Incorporated

Table of Contents

1 Device Overview **1**
1.1 Features 1
1.2 Applications 1
1.3 Description 2
1.4 Functional Block Diagram 2
2 Revision History **4**
3 Terminal Configuration and Functions **5**
3.1 Pin Diagram 5
3.2 Pin Configuration 6
4 Specifications **7**
4.1 Absolute Maximum Ratings 7
4.2 Handling Ratings 7
4.3 Recommended Operating Conditions (General Characteristics) 7
4.4 Thermal Resistance Characteristics for RHB Package 7
4.5 RF Characteristics 8
4.6 Regulatory Standards 8
4.7 Current Consumption, Static Modes 9
4.8 Current Consumption, Transmit Modes 9
4.9 Current Consumption, Receive Modes 10
4.10 Receive Parameters 11
4.11 Transmit Parameters 14
4.12 PLL Parameters 15
4.13 Wake-up and Timing 16
4.14 40-MHz Crystal Oscillator 16
4.15 40-MHz Clock Input (TCXO) 16
4.16 32-kHz Clock Input 17
4.17 40-kHz RC Oscillator 17
4.18 I/O and Reset 17
4.19 Temperature Sensor 17
4.20 Typical Characteristics 18
5 Detailed Description **21**
5.1 Block Diagram 21
5.2 Frequency Synthesizer 21
5.3 Receiver 22
5.4 Transmitter 22
5.5 Radio Control and User Interface 22
5.6 Enhanced Wake-On-Radio (eWOR) 22
5.7 RX Sniff Mode 23
5.8 Antenna Diversity 23
5.9 WaveMatch 24
6 Typical Application Circuit **25**
7 Device and Documentation Support **26**
7.1 Device Support 26
7.2 Documentation Support 27
7.3 Community Resources 27
7.4 Trademarks 27
7.5 Electrostatic Discharge Caution 27
7.6 Glossary 27
8 Mechanical Packaging and Orderable Information **28**

Copyright © 2013–2014, Texas Instruments Incorporated

2 Revision History

NOTE: Page numbers for previous revisions may differ from page numbers in the current version.

This data manual revision history highlights the changes made to the SWRS154A device-specific data manual to make it an SWRS154B revision.

Changes from Revision A (June 2014) to Revision B	Page
• Added Ambient to the temperature range condition and removed Tj from Temperature range	7
• Added data to TCXO table	16

Copyright © 2013–2014, Texas Instruments Incorporated

3 Terminal Configuration and Functions

3.1 Pin Diagram

Figure 3-1 shows pin names and locations for the CC1201 device.

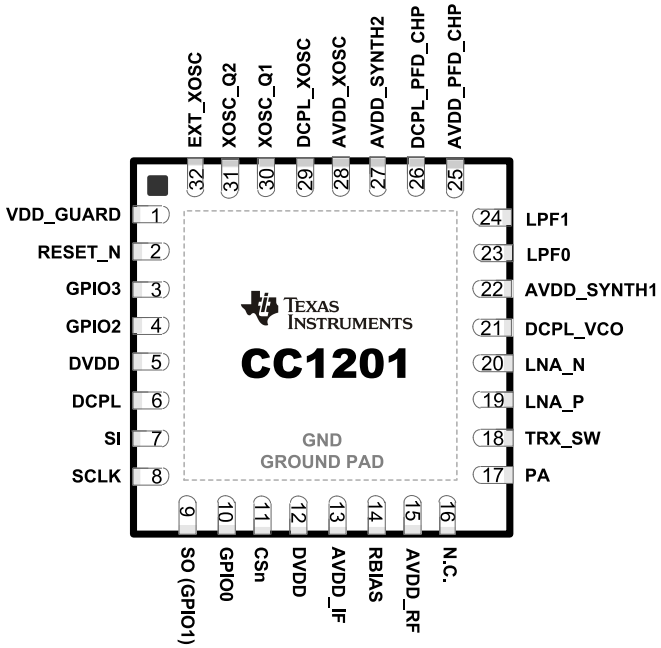

Figure 3-1. Package 5-mm × 5-mm QFN

3.2 Pin Configuration

The following table lists the pin-out configuration for the CC1201 device.

PIN NO.	PIN NAME	TYPE / DIRECTION	DESCRIPTION
1	VDD_GUARD	Power	2.0–3.6 V VDD
2	RESET_N	Digital input	Asynchronous, active-low digital reset
3	GPIO3	Digital I/O	General-purpose I/O
4	GPIO2	Digital I/O	General-purpose I/O
5	DVDD	Power	2.0–3.6 VDD to internal digital regulator
6	DCPL	Power	Digital regulator output to external decoupling capacitor
7	SI	Digital input	Serial data in
8	SCLK	Digital input	Serial data clock
9	SO(GPIO1)	Digital I/O	Serial data out (general-purpose I/O)
10	GPIO0	Digital I/O	General-purpose I/O
11	CSn	Digital input	Active-low chip select
12	DVDD	Power	2.0–3.6 V VDD
13	AVDD_IF	Power	2.0–3.6 V VDD
14	RBIAS	Analog	External high-precision resistor
15	AVDD_RF	Power	2.0–3.6 V VDD
16	N.C.		Not connected
17	PA	Analog	Single-ended TX output (requires DC path to VDD)
18	TRX_SW	Analog	TX and RX switch. Connected internally to GND in TX and floating (high-impedance) in RX.
19	LNA_P	Analog	Differential RX input (requires DC path to ground)
20	LNA_N	Analog	Differential RX input (requires DC path to ground)
21	DCPL_VCO	Power	Pin for external decoupling of VCO supply regulator
22	AVDD_SYNTH1	Power	2.0–3.6 V VDD
23	LPF0	Analog	External loopfilter components
24	LPF1	Analog	External loopfilter components
25	AVDD_PFD_CHP	Power	2.0–3.6 V VDD
26	DCPL_PFD_CHP	Power	Pin for external decoupling of PFD and CHP regulator
27	AVDD_SYNTH2	Power	2.0–3.6 V VDD
28	AVDD_XOSC	Power	2.0–3.6 V VDD
29	DCPL_XOSC	Power	Pin for external decoupling of XOSC supply regulator
30	XOSC_Q1	Analog	Crystal oscillator pin 1 (must be grounded if a TCXO or other external clock connected to EXT_XOSC is used)
31	XOSC_Q2	Analog	Crystal oscillator pin 2 (must be left floating if a TCXO or other external clock connected to EXT_XOSC is used)
32	EXT_XOSC	Digital input	Pin for external clock input (must be grounded if a regular crystal connected to XOSC_Q1 and XOSC_Q2 is used)
–	GND	Ground pad	The ground pad must be connected to a solid ground plane.

Copyright © 2013–2014, Texas Instruments Incorporated

4 Specifications

All measurements performed on CC1200EM_868_930 rev.1.0.0, CC1200EM_420_470 rev.1.0.1, or CC1200EM_169 rev.1.2.

4.1 Absolute Maximum Ratings(1)(2)

over operating free-air temperature range (unless otherwise noted)

PARAMETER	MIN	MAX	UNIT	CONDITION
Supply voltage (VDD, AVDD_x)	–0.3	3.9	V	All supply pins must have the same voltage
Input RF level		+10	dBm	
Voltage on any digital pin	–0.3	VDD+0.3	V	max 3.9 V
Voltage on any analog Pin (including DCPL pins)	–0.3	2.0	V	

(1) Stresses beyond those listed under absolute maximum ratings may cause permanent damage to the device. These are stress ratings only, and functional operation of the device at these or any other conditions beyond those indicated under recommended operating conditions is not implied. Exposure to absolute-maximum-rated conditions for extended periods may affect device reliability.
(2) All voltage values are with respect to V_{SS}, unless otherwise noted.

4.2 Handling Ratings

				MIN	MAX	UNIT
T_{stg}	Storage temperature range			–40	125	°C
V_{ESD}	Electrostatic discharge (ESD) performance:	Human body model (HBM), per ANSI/ESDA/JEDEC JS001(1)		–2	2	kV
		Charged device model (CDM), per JESD22-C101(2)	All pins	–500	500	V

(1) JEDEC document JEP155 states that 500-V HBM allows safe manufacturing with a standard ESD control process.
(2) JEDEC document JEP157 states that 250-V HBM allows safe manufacturing with a standard ESD control process.

4.3 Recommended Operating Conditions (General Characteristics)

PARAMETER	MIN	TYP	MAX	UNIT	CONDITION
Voltage supply range	2.0		3.6	V	All supply pins must have the same voltage
Voltage on digital inputs	0		VDD	V	
Temperature range	–40		85	°C	Ambient

4.4 Thermal Resistance Characteristics for RHB Package

		°C/W(1)	AIR FLOW (m/s)(2)
$R\theta_{JC}$	Junction-to-case (top)	21.1	0.00
$R\theta_{JB}$	Junction-to-board	5.3	0.00
$R\theta_{JA}$	Junction-to-free air	31.3	0.00
Psi_{JT}	Junction-to-package top	0.2	0.00
Psi_{JB}	Junction-to-board	5.3	0.00
$R\theta_{JC}$	Junction-to-case (bottom)	0.8	0.00

(1) These values are based on a JEDEC-defined 2S2P system (with the exception of the Theta JC [$R\Theta_{JC}$] value, which is based on a JEDEC-defined 1S0P system) and will change based on environment as well as application. For more information, see these EIA/JEDEC standards:
- JESD51-2, *Integrated Circuits Thermal Test Method Environmental Conditions - Natural Convection (Still Air)*
- JESD51-3, *Low Effective Thermal Conductivity Test Board for Leaded Surface Mount Packages*
- JESD51-7, *High Effective Thermal Conductivity Test Board for Leaded Surface Mount Packages*
- JESD51-9, *Test Boards for Area Array Surface Mount Package Thermal Measurements*

Power dissipation of 40 mW and an ambient temperature of 25ºC is assumed.
(2) m/s = meters per second

Copyright © 2013–2014, Texas Instruments Incorporated

4.5 RF Characteristics

PARAMETER	MIN	TYP	MAX	UNIT	CONDITION
Frequency bands	820		950	MHz	
	410		475	MHz	
	164		190	MHz	
	(274)		(316.6)	MHz	Contact TI for more information about the use of these frequency bands.
	(205)		(237.5)	MHz	
	(137)		(158.3)	MHz	
Frequency resolution		30		Hz	In 820–950 MHz band
		15		Hz	In 410–475 MHz band
		6		Hz	In 164–190 MHz band
Data rate	0		1250	kbps	Packet mode
	0		625	kbps	Transparent mode

4.6 Regulatory Standards

PERFORMANCE MODE	FREQUENCY BAND	SUITABLE FOR COMPLIANCE WITH	COMMENTS
High-performance mode	820–950 MHz	ARIB STD-T108 ETSI EN 300 220 receiver categories 2 and 3 FCC PART 15.247 FCC PART 15.249	Performance also suitable for systems targeting maximum allowed output power in the respective bands, using a range extender such as the CC1190
	410–475 MHz	ETSI EN 300 220 receiver categories 2 and 3	Performance also suitable for systems targeting maximum allowed output power in the respective bands, using a range extender
	164–190 MHz	ETSI EN 300 220	Performance also suitable for systems targeting maximum allowed output power in the respective bands, using a range extender
Low-power mode	820–950 MHz	ETSI EN 300 220 receiver categories 2 and 3 FCC PART 15.247 FCC PART 15.249	
	410–475 MHz	ETSI EN 300 220 receiver categories 2 and 3	
	164–190 MHz	ETSI EN 300 220	

Copyright © 2013–2014, Texas Instruments Incorporated

4.7 Current Consumption, Static Modes

T_A = 25°C, VDD = 3.0 V (unless otherwise noted)

PARAMETER	MIN	TYP	MAX	UNIT	CONDITION
Power down with retention		0.12	1	µA	
		0.5		µA	Low-power RC oscillator running
XOFF mode		180		µA	Crystal oscillator / TCXO disabled
IDLE mode		1.5		mA	Clock running, system waiting with no radio activity

4.8 Current Consumption, Transmit Modes

4.8.1 868-, 915-, and 920-MHz Bands (High-Performance Mode)

T_A = 25°C, VDD = 3.0 V (unless otherwise noted)

PARAMETER	MIN	TYP	MAX	UNIT	CONDITION
TX current consumption +14 dBm		46		mA	
TX current consumption +10 dBm		36		mA	

4.8.2 433-MHz Band (High-Performance Mode)

T_A = 25°C, VDD = 3.0 V (unless otherwise noted)

PARAMETER	MIN	TYP	MAX	UNIT	CONDITION
TX current consumption +15 dBm		49		mA	
TX current consumption +14 dBm		46		mA	
TX current consumption +10 dBm		35		mA	

Copyright © 2013–2014, Texas Instruments Incorporated

4.8.3 169-MHz Band (High Performance Mode)

T_A = 25°C, VDD = 3.0 V (unless otherwise noted)

PARAMETER	MIN	TYP	MAX	UNIT	CONDITION
TX current consumption +15 dBm		54		mA	
TX current consumption +14 dBm		50		mA	
TX current consumption +10 dBm		39		mA	

4.8.4 Low-Power Mode

T_A = 25°C, VDD = 3.0 V, f_c = 869.5 MHz (unless otherwise noted)

PARAMETER	MIN	TYP	MAX	UNIT	CONDITION
TX Current Consumption +10 dBm		33.6		mA	

4.9 Current Consumption, Receive Modes

4.9.1 High-Performance Mode

T_A = 25°C, VDD = 3.0 V, f_c = 869.5 MHz (unless otherwise noted)

PARAMETER	MIN	TYP	MAX	UNIT	CONDITION
RX wait for sync 1.2 kbps, 4-byte preamble 38.4 kbps, 12-byte preamble 50 kbps, 24-byte preamble		 0.5 3.5 2.1		 mA mA mA	Using RX Sniff Mode, where the receiver wakes up at regular intervals looking for an incoming packet. Sniff mode configured to terminate on carrier sense, and is measured using RSSI_VALID _COUNT = 1 (0 for 1.2 kbps), AGC_WIN_SIZE = 0, and SETTLE_WAIT = 1.(1)
RX peak current 1.2 kbps		 23.6		 mA	Peak current consumption during packet reception
Average current consumption Check for data packet every 1 second using eWOR		8		µA	50 kbps, 5-byte preamble, 40-kHz RC oscillator used as eWOR timer

(1) See the sniff mode design note for more information (SWRA428)

4.9.2 Low-Power Mode

T_A = 25°C, VDD = 3.0 V, f_c = 869.5 MHz (unless otherwise noted)

PARAMETER	MIN	TYP	MAX	UNIT	CONDITION
RX Peak current low-power RX mode 50 kbps		 19		 mA	Peak current consumption during packet reception at the sensitivity limit

Copyright © 2013–2014, Texas Instruments Incorporated

4.10 Receive Parameters

All RX measurements made at the antenna connector, to a bit error rate (BER) limit of 1%. Selectivity and blocking is measured with the desired signal 3 dB above the sensitivity level.

4.10.1 General Receive Parameters (High-Performance Mode)

T_A = 25°C, VDD = 3.0 V, f_c = 869.5 MHz (unless otherwise noted)

PARAMETER	MIN	TYP	MAX	UNIT	CONDITION
Saturation		+10		dBm	
Digital channel filter programmable bandwidth	50		1600	kHz	
IIP3		–14		dBm	At maximum gain
Data rate offset tolerance		±14 ±1600		% ppm	With carrier sense detection enabled With carrier sense detection disabled
Spurious emissions 1–13 GHz (VCO leakage at 3.5 GHz) 30 MHz to 1 GHz		 < –56 < –57		 dBm dBm	Radiated emissions measured according to ETSI EN 300 220, f_c = 869.5 MHz
Optimum source impedance 868-, 915-, and 920-MHz bands 433-MHz band 169-MHz band		 60 + j60 / 30 + j30 100 + j60 / 50 + j30 140 + j40 / 70 + j20		 Ω Ω Ω	 (Differential or Single-Ended RX Configurations)

Copyright © 2013–2014, Texas Instruments Incorporated

4.10.2 RX Performance in 868-, 915-, and 920-MHz Bands (High-Performance Mode)

T_A = 25°C, VDD = 3.0 V (unless otherwise noted)

PARAMETER	MIN	TYP	MAX	UNIT	CONDITION
Sensitivity		–119		dBm	1.2 kbps 2-FSK, DEV=20 kHz CHF=50 kHz (1)
		–113		dBm	4.8 kbps OOK CHF=128 kHz (1)
		–108		dBm	32.768 kbps 2-GFSK, DEV=50 kHz CHF=208 kHz (1)
		–110		dBm	38.4 kbps 2-GFSK, DEV=20 kHz CHF=104 kHz (1)
		–109		dBm	50 kbps 2-GFSK, DEV=25 kHz, CHF=104 kHz (1)
		–97		dBm	500 kbps 2-GMSK, CHF=833 kHz (1)
		–97		dBm	1 Mbps 4-GFSK, DEV=400 kHz, CHF=1.66 MHz (1)
Blocking and selectivity 1.2-kbps 2-FSK, 50-kHz channel separation, 20-kHz deviation, 50-kHz channel filter		50		dB	± 50 kHz (adjacent channel)
		50		dB	± 100 kHz (alternate channel)
		75		dB	± 2 MHz
		80		dB	± 10 MHz
Blocking and selectivity 32.768-kbps 2-GFSK, 200-kHz channel separation, 50-kHz deviation, 208-kHz channel filter		38		dB	± 200 kHz
		46		dB	± 400 kHz
		66		dB	± 2 MHz
		70		dB	± 10 MHz
Blocking and selectivity 38.4-kbps 2-GFSK, 100-kHz channel separation, 20-kHz deviation, 104-kHz channel filter		44		dB	+ 100 kHz (adjacent channel)
		44		dB	± 200 kHz (alternate channel)
		64		dB	± 2 MHz
		72		dB	± 10 MHz
Blocking and selectivity 50-kbps 2-GFSK, 200-kHz channel separation, 25-kHz deviation, 104-kHz channel filter (Same modulation format as 802.15.4g Mandatory Mode)		41		dB	± 200 kHz (adjacent channel)
		46		dB	± 400 kHz (alternate channel)
		65		dB	± 2 MHz
		71		dB	± 10 MHz
Blocking and selectivity 100-kbps 2-GFSK, 50-kHz deviation, 208-kHz channel filter		45		dB	± 400 kHz (adjacent channel)
		54		dB	± 800 kHz (alternate channel)
		63		dB	± 2 MHz
		68		dB	± 10 MHz
Blocking and selectivity 500-kbps GMSK, 833-kHz channel filter		42		dB	+ 1 MHz (adjacent channel)
		42		dB	± 2 MHz (alternate channel)
		57		dB	± 10 MHz
Blocking and selectivity 1-Mbps 4-GFSK, 400-kHz deviation, 1.6-MHz channel filter		46		dB	± 2 MHz (adjacent channel)
		52		dB	± 4 MHz (alternate channel)
		59		dB	± 10 MHz

(1) DEV is short for deviation, CHF is short for Channel Filter Bandwidth

Copyright © 2013–2014, Texas Instruments Incorporated

4.10.3 RX Performance in 433-MHz Band (High-Performance Mode)

T_A = 25°C, VDD = 3.0 V (unless otherwise noted)

PARAMETER	MIN	TYP	MAX	UNIT	CONDITION
Sensitivity		–120		dBm	1.2 kbps 2-FSK, DEV=20 kHz CHF=50 kHz(1)
		–111		dBm	38.4 kbps 2-GFSK, DEV=20 kHz CHF=104 kHz(1)
Blocking and selectivity 1.2-kbps 2-FSK, 50-kHz channel separation, 20-kHz deviation, 50-kHz channel filter		56		dB	± 50 kHz (adjacent channel)
		56		dB	± 100 kHz (alternate channel)
		79		dB	± 2 MHz
		84		dB	± 10 MHz
Blocking and selectivity 38.4-kbps 2-GFSK, 100-kHz channel separation, 20-kHz deviation, 104-kHz channel filter		49		dB	+ 100 kHz (adjacent channel)
		48		dB	± 200 kHz (alternate channel)
		66		dB	± 2 MHz
		74		dB	± 10 MHz

(1) DEV is short for deviation, CHF is short for Channel Filter Bandwidth

4.10.4 RX Performance in 169-MHz Band (High-Performance Mode)

T_A = 25°C, VDD = 3.0 V (unless otherwise noted)

PARAMETER	MIN	TYP	MAX	UNIT	CONDITION
Sensitivity		–119		dBm	1.2 kbps 2-FSK, DEV=20 kHz CHF=50 kHz(1)
Blocking and Selectivity 1.2 kbps 2-FSK, 50 kHz channel separation, 20 kHz deviation, 50 kHz channel filter		62		dB	± 50 kHz (adjacent channel)
		62		dB	± 100 kHz (alternate channel)
		81		dB	± 2 MHz
		85		dB	± 10 MHz
Image rejection (Image compensation enabled)		67		dB	1.2 kbps, DEV=20 kHz, CHF=50 kHz, image at –417 kHz(1)

(1) DEV is short for deviation, CHF is short for Channel Filter Bandwidth

4.10.5 RX Performance in Low-Power Mode

T_A = 25°C, VDD = 3.0 V, f_c = 869.5 MHz (unless otherwise noted)

PARAMETER	MIN	TYP	MAX	UNIT	CONDITION
Sensitivity		–96		dBm	50 kbps 2-GFSK, DEV=25 kHz, CHF=119 kHz(1)
Blocking and selectivity 50 kbps 2-GFSK, 200-kHz channel separation, 25-kHz deviation, 104-kHz channel filter (Same modulation format as 802.15.4g Mandatory Mode)		41		dB	+ 200 kHz (adjacent channel)
		45		dB	+ 400 kHz (alternate channel)
		62		dB	± 2 MHz
		60		dB	± 10 MHz
Saturation		10		dBm	

(1) DEV is short for deviation, CHF is short for Channel Filter Bandwidth

Copyright © 2013–2014, Texas Instruments Incorporated

4.11 Transmit Parameters

T_A = 25°C, VDD = 3.0 V, f_c = 869.5 MHz (unless otherwise noted)

PARAMETER	MIN	TYP	MAX	UNIT	CONDITION
Max output power		+14		dBm	At 915/920 MHz
		+15		dBm	At 915/920 MHz with VDD = 3.6 V
		+15		dBm	At 868 MHz
		+16		dBm	At 868 MHz with VDD = 3.6 V
		+15		dBm	At 433 MHz
		+16		dBm	At 433 MHz with VDD = 3.6 V
		+15		dBm	At 169 MHz
		+16		dBm	At 169 MHz with VDD = 3.6 V
Min output power		–12		dBm	Within fine step size range
		–38		dBm	Within coarse step size range
Output power step size		0.4		dB	Within fine step size range
Adjacent channel power		–60		dBc	4-GFSK 9.6 kbps in 12.5 kHz channel, measured in 8.75 kHz bandwidth (ETSI 300 220 compliant)
Spurious emissions (Excluding harmonics)					Transmission at +14 dBm Suitable for systems targeting compliance with ETSI EN 300-220, FCC part 15, ARIB STD-T108 Measured in 1 MHz bandwidth
30 MHz–1 GHz		< –57		dBm	
1–12.75 GHz		< –50		dBm	
Harmonics					
Second Harm, 169 MHz (ETSI)		–43		dBm	
Third Harm, 169 MHz (ETSI)		–57		dBm	
Fourth Harm, 169 MHz (ETSI)		–63		dBm	
Second Harm, 433 MHz (ETSI)		–59		dBm	
Third Harm, 433 MHz (ETSI)		–51		dBm	
Fourth Harm, 433 MHz (ETSI)		–63		dBm	Transmission at +14 dBm (or maximum allowed in applicable band where this is less than +14 dBm) using TI reference design Suitable for systems targeting compliance with ETSI EN 300-220, FCC part 15, ARIB STD-T108
Second Harm, 868 MHz (ETSI)		–50		dBm	
Third Harm, 868 MHz (ETSI)		–44		dBm	
Fourth Harm, 868 MHz (ETSI)		–56		dBm	
Second Harm, 915 MHz (FCC)		–58		dBm	
Third Harm, 915 MHz (FCC)		–46		dBm	
Fourth Harm, 915 MHz (FCC)		–62		dBm	
Second Harm, 920 MHz (ARIB)		–65		dBm	
Third Harm, 920 MHz (ARIB)		–60		dBm	
Optimum load impedance					
868-, 915-, and 920-MHz bands		35 + j35		Ω	
433-MHz band		55 + j25		Ω	
169-MHz band		80 + j0		Ω	

Copyright © 2013–2014, Texas Instruments Incorporated

4.12 PLL Parameters

4.12.1 High Performance Mode

T_A = 25°C, VDD = 3.0 V (unless otherwise noted)

PARAMETER	MIN	TYP	MAX	UNIT	CONDITION
Phase noise in 868-, 915-, and 920-MHz Bands 200-kHz loop bandwidth setting		–94		dBc/Hz	± 10 kHz offset
		–96		dBc/Hz	± 100 kHz offset
		–123		dBc/Hz	± 1 MHz offset
		–137		dBc/Hz	± 10 MHz offset
Phase noise in 868-, 915-, and 920-MHz Bands 300-kHz loop bandwidth setting		–100		dBc/Hz	± 10 kHz offset
		–102		dBc/Hz	± 100 kHz offset
		–121		dBc/Hz	± 1 MHz offset
		–136		dBc/Hz	± 10 MHz offset
Phase noise in 868-, 915-, and 920-MHz Bands 400-kHz loop bandwidth setting		–103		dBc/Hz	± 10 kHz offset
		–104		dBc/Hz	± 100 kHz offset
		–119		dBc/Hz	± 1 MHz offset
		–133		dBc/Hz	± 10 MHz offset
Phase noise in 868-, 915-, and 920-MHz Bands 500-kHz loop bandwidth setting		–104		dBc/Hz	± 10 kHz offset
		–106		dBc/Hz	± 100 kHz offset
		–116		dBc/Hz	± 1 MHz offset
		–130		dBc/Hz	± 10 MHz offset
Phase noise in 433-MHz band 300-kHz loop bandwidth setting		–106		dBc/Hz	± 10 kHz offset
		–107		dBc/Hz	± 100 kHz offset
		–127		dBc/Hz	± 1 MHz offset
		–141		dBc/Hz	± 10 MHz offset
Phase noise in 169-MHz band 300-kHz loop bandwidth setting		–114		dBc/Hz	± 10 kHz offset
		–114		dBc/Hz	± 100 kHz offset
		–132		dBc/Hz	± 1 MHz offset
		–142		dBc/Hz	± 10 MHz offset

4.12.2 Low-Power Mode

PARAMETER	MIN	TYP	MAX	UNIT	CONDITION
Phase noise in 868-, 915-, and 920-MHz bands 200-kHz loop bandwidth setting		–99		dBc/Hz	± 10 kHz offset
		–101		dBc/Hz	± 100 kHz offset
		–121		dBc/Hz	± 1 MHz offset
		–135		dBc/Hz	± 10 MHz offset

Copyright © 2013–2014, Texas Instruments Incorporated

4.13 Wake-up and Timing

T_A = 25°C, VDD = 3.0 V, f_c = 869.5 MHz (unless otherwise noted)

The turnaround behavior to and from RX and/or TX is highly configurable, and the time it takes will depend on how the device is set up. See the CC120X user guide (SWRU346) for more information.

PARAMETER	MIN	TYP	MAX	UNIT	CONDITION
Powerdown to IDLE		0.24		ms	Depends on crystal
IDLE to RX/TX		133		µs	Calibration disabled
		369		µs	Calibration enabled
RX/TX turnaround		43		µs	
RX-to-RX turnaround		369		µs	With PLL calibration
		0		µs	Without PLL calibration
TX-to-TX turnaround		369		µs	With PLL calibration
		0		µs	Without PLL calibration
RX/TX to IDLE time		237		µs	Calibrate when leaving RX/TX enabled
		0		µs	Calibrate when leaving RX/TX disabled
Frequency synthesizer calibration		314		µs	When using SCAL strobe
Minimum required number of preamble bytes		0.5		bytes	Required for RF front end gain settling only. Digital demodulation does not require preamble for settling
Time from start RX until valid RSSI (1) Including gain settling (function of channel bandwidth. Programmable for trade-off between speed and accuracy)		0.25		ms	120-kHz channels

(1) See the design note on RSSI and response time. It is written for the CC112X devices, but the same principles apply for the CC1201 device.

4.14 40-MHz Crystal Oscillator

T_A = 25°C, VDD = 3.0 V (unless otherwise noted)

PARAMETER	MIN	TYP	MAX	UNIT	CONDITION
Crystal frequency	38.4		40	MHz	It is expected that there will be degraded sensitivity at multiples of XOSC/2 in RX, and an increase in spurious emissions when the RF channel is close to multiples of XOSC in TX. We recommend that the RF channel is kept RX_BW/2 away from XOSC/2 in RX, and that the level of spurious emissions be evaluated if the RF channel is closer than 1 MHz to multiples of XOSC in TX.
Load capacitance (C_L)		10		pF	
ESR			60	Ω	Simulated over operating conditions
Start-up time		0.24		ms	Depends on crystal

4.15 40-MHz Clock Input (TCXO)

T_A = 25°C, VDD = 3.0 V if nothing else stated

PARAMETER	MIN	TYP	MAX	UNIT	CONDITION
Clock frequency	38.4		40	MHz	
TCXO with CMOS output					TCXO with CMOS output directly coupled to pin EXT_OSC
High input voltage	1.4		VDD	V	
Low input voltage	0		0.6	V	
Rise / Fall time			2	ns	
Clipped sine output					TCXO clipped sine output connected to pin EXT_OSC through series capacitor
Clock input amplitude (peak-to-peak)	0.8		1.5	V	

Copyright © 2013–2014, Texas Instruments Incorporated

4.16 32-kHz Clock Input

T_A = 25°C, VDD = 3.0 V (unless otherwise noted)

PARAMETER	MIN	TYP	MAX	UNIT	CONDITION
Clock frequency		32		kHz	
32-kHz clock input pin input high voltage	0.8 x VDD			V	
32-kHz clock input pin input low voltage			0.2 x VDD	V	

4.17 40-kHz RC Oscillator

T_A = 25°C, VDD = 3.0 V (unless otherwise noted)

PARAMETER	MIN	TYP	MAX	UNIT	CONDITION
Frequency		40		kHz	After calibration (frequency calibrated against the 40-MHz crystal or TCXO)
Frequency accuracy after calibration		±0.1		%	Relative to frequency reference (that is, 40-MHz crystal or TCXO)
Initial calibration time		1.32		ms	

4.18 I/O and Reset

T_A = 25°C, VDD = 3.0 V (unless otherwise noted)

PARAMETER	MIN	TYP	MAX	UNIT	CONDITION
Logic input high voltage	0.8 x VDD			V	
Logic input low voltage			0.2 x VDD	V	
Logic output high voltage	0.8 x VDD			V	At 4-mA output load or less
Logic output low voltage			0.2 x VDD	V	
Power-on reset threshold		1.3		V	Voltage on DVDD pin

4.19 Temperature Sensor

T_A = 25°C, VDD = 3.0 V (unless otherwise noted).

PARAMETER	MIN	TYP	MAX	UNIT	CONDITION
Temperature sensor range	–40		85	°C	
Temperature coefficient		2.66		mV / °C	Change in sensor output voltage versus change in temperature
Typical output voltage		794		mV	Typical sensor output voltage at TA = 25°C, VDD = 3.0 V
VDD coefficient		1.17		mV / V	Change in sensor output voltage versus change in VDD

The CC1201 device can be configured to provide a voltage proportional to temperature on GPIO1. The temperature can be estimated by measuring this voltage (see Section 4.19, *Temperature Sensor*). For more information, see the temperature sensor design note (SWRA415).

Copyright © 2013–2014, Texas Instruments Incorporated

4.20 Typical Characteristics

TA = 25°C, VDD = 3.0 V, f_c = 869.5 MHz (unless otherwise noted)

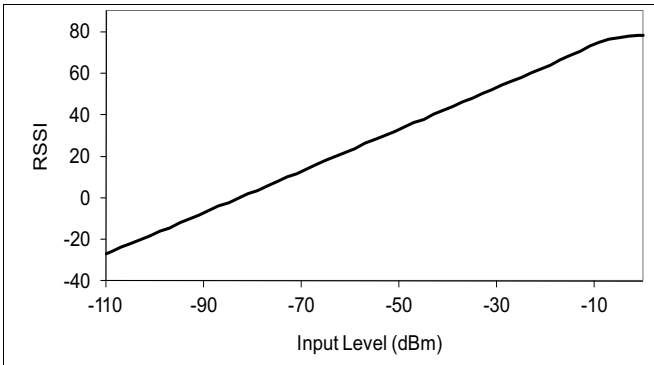

50-kbps GFSK, 25-kHz Deviation, 104-kHz Channel Filter Bandwidth

Figure 4-1. RSSI vs Input Level

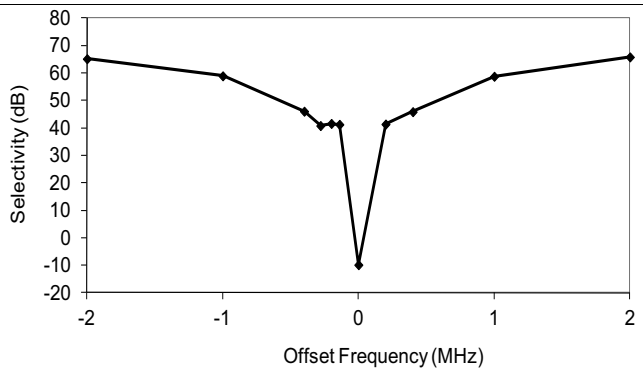

50 kbps, 25-kHz Deviation, 104-kHz Channel Filter Bandwidth Image Frequency at –0.28-MHz Offset

Figure 4-2. Selectivity vs Offset Frequency (100-kHz Channels)

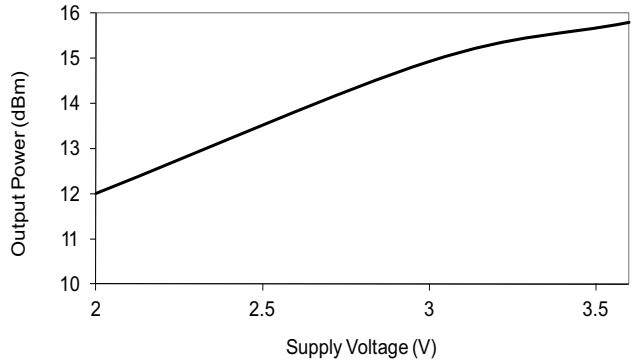

Maximum Output Power Setting (0x7F)

Figure 4-3. Output Power vs Supply Voltage

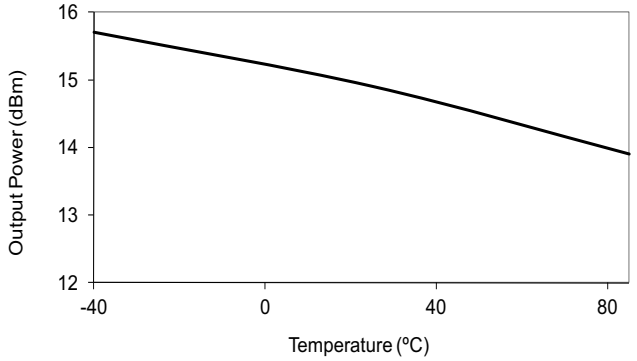

Maximum Output Power Setting (0x7F)

Figure 4-4. Output Power vs Temperature

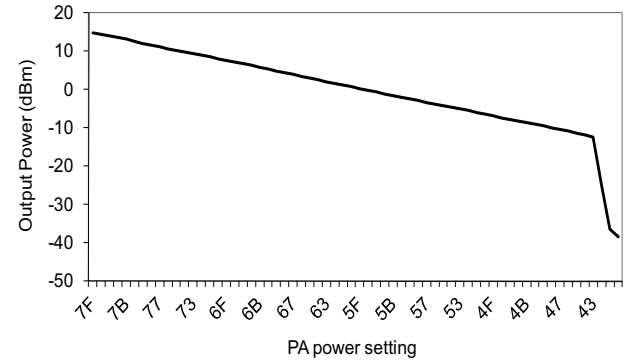

Figure 4-5. Output Power at 868 MHz vs PA Power Setting

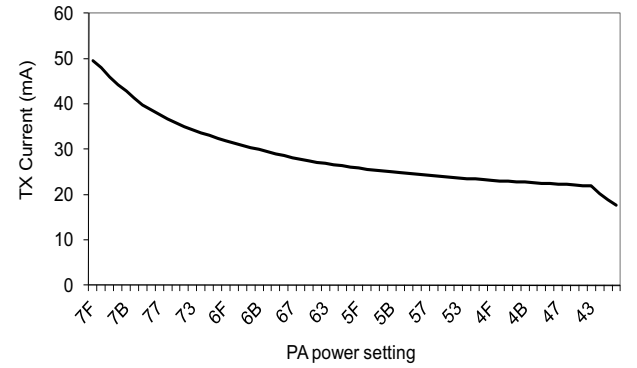

Figure 4-6. TX Current at 868 MHz vs PA Power Setting

Copyright © 2013–2014, Texas Instruments Incorporated

Typical Characteristics *(continued)*

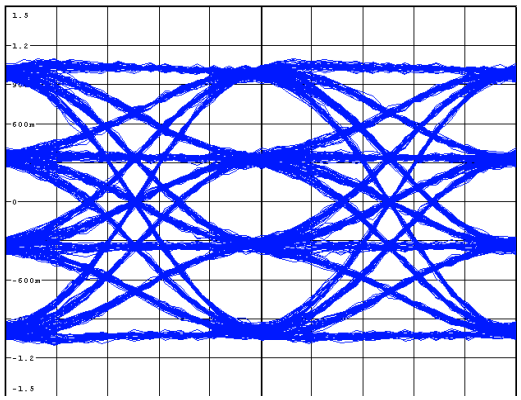

1 Mbps 4-GFSK, 400-kHz Deviation 500-kHz Loop Bandwidth
Figure 4-7. Eye Diagram

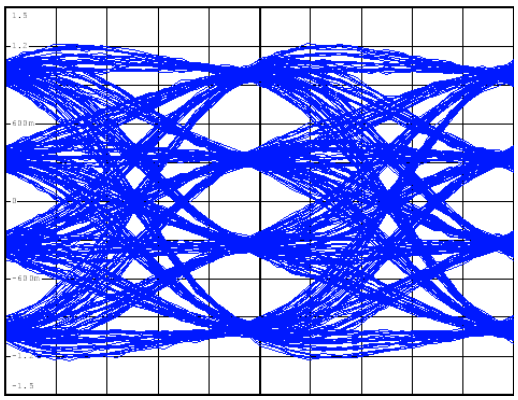

1 Mbps 4-GFSK, 400-kHz Deviation 300-kHz Loop Bandwidth
Figure 4-8. Eye Diagram

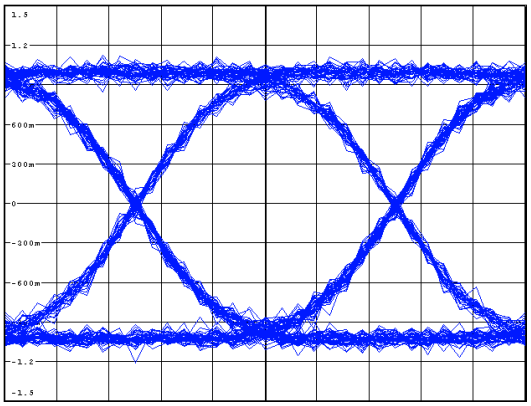

1 kbps GFSK, 25-kHz Deviation 200-kHz Loop Bandwidth
Figure 4-9. Eye Diagram

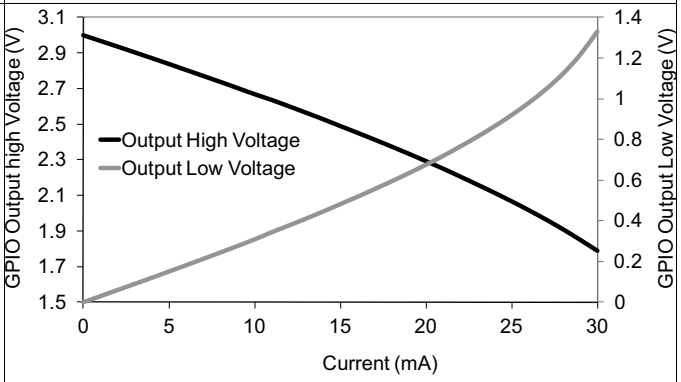

Figure 4-10. GPIO Output High and Low Voltage vs Current Being Sourced and Sinked

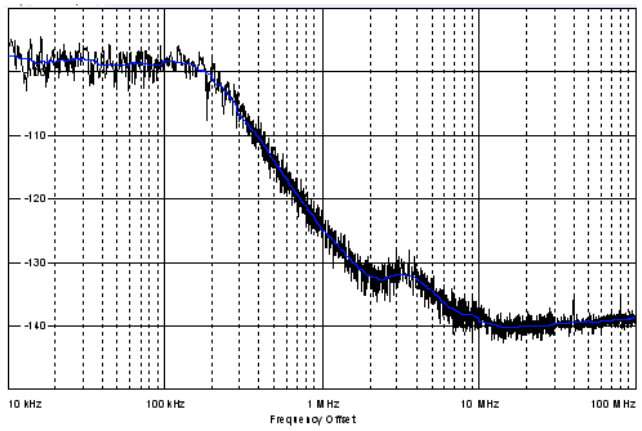

200-kHz Loop Bandwidth
Figure 4-11. Phase Noise 869.5 MHz (10-kHz to 100-MHz Offset)

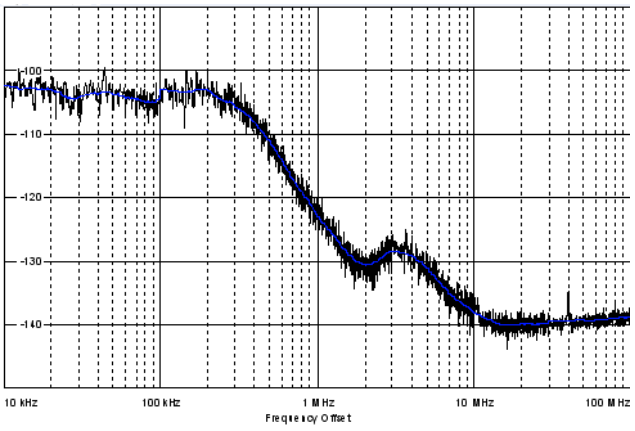

300-kHz Loop Bandwidth
Figure 4-12. Phase Noise 869.5 MHz (10-kHz to 100-MHz Offset)

Copyright © 2013–2014, Texas Instruments Incorporated

Typical Characteristics *(continued)*

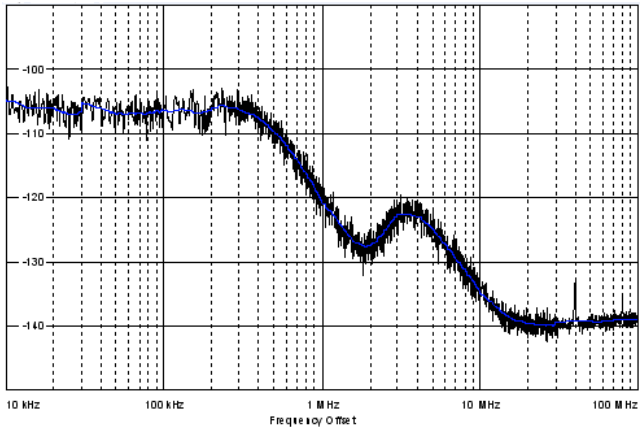

400-kHz Loop Bandwidth

Figure 4-13. Phase Noise 869.5 MHz (10-kHz to 100-MHz Offset)

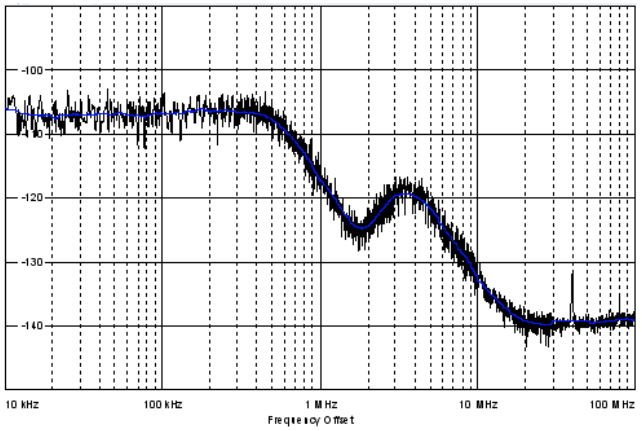

500-kHz Loop Bandwidth

Figure 4-14. Phase Noise 869.5 MHz (10-kHz to 100-MHz Offset)

Copyright © 2013–2014, Texas Instruments Incorporated

5 Detailed Description

5.1 Block Diagram

Figure 5-1 shows the system block diagram of the CC120x family of devices.

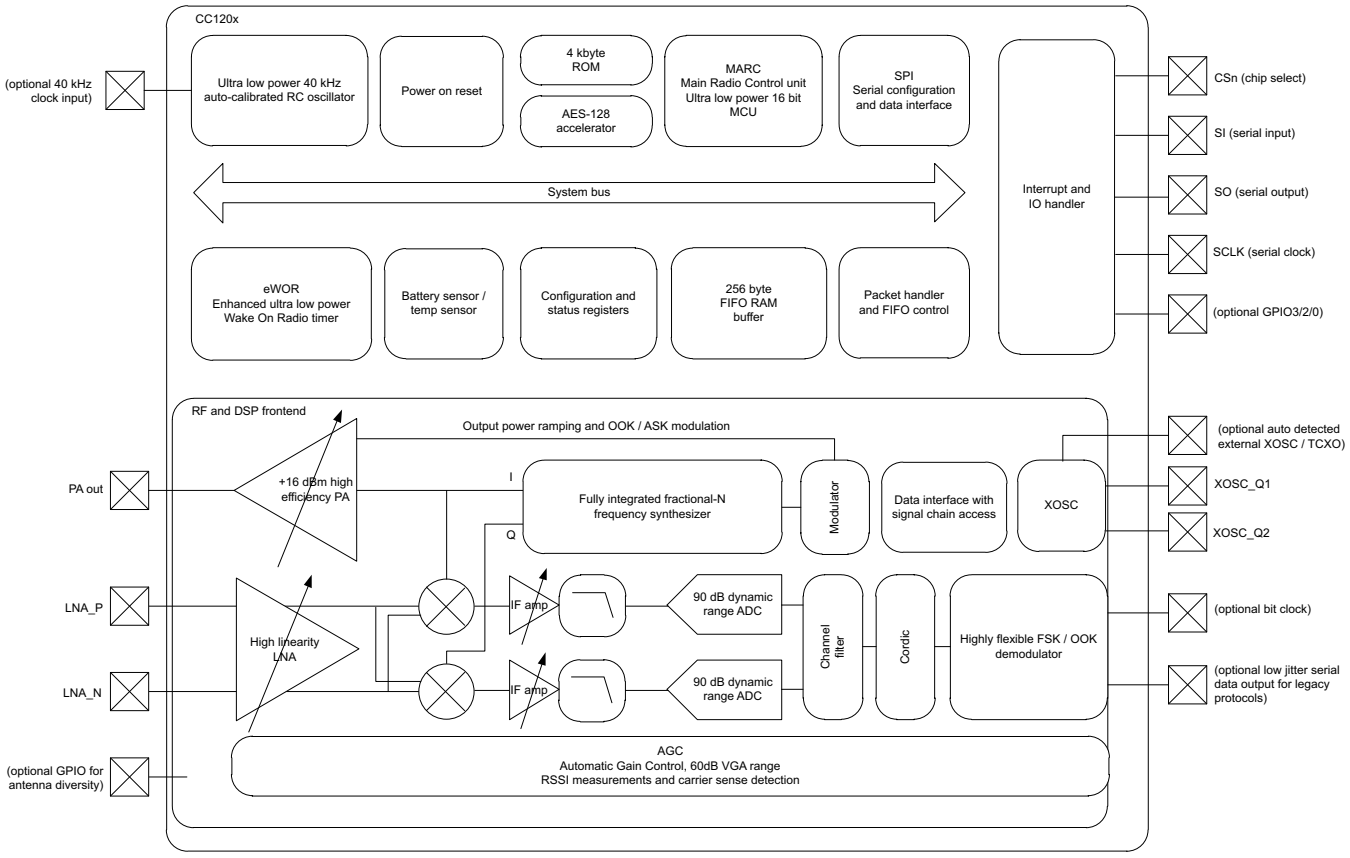

Figure 5-1. System Block Diagram

5.2 Frequency Synthesizer

At the center of the CC1201 device there is a fully integrated, fractional-N, ultra-high-performance frequency synthesizer. The frequency synthesizer is designed for excellent phase noise performance, providing very high selectivity and blocking performance. The system is designed to comply with the most stringent regulatory spectral masks at maximum transmit power.

Either a crystal can be connected to XOSC_Q1 and XOSC_Q2, or a TCXO can be connected to the EXT_XOSC input. The oscillator generates the reference frequency for the synthesizer, as well as clocks for the analog-to-digital converter (ADC) and the digital part. To reduce system cost, the CC1201 device has high-accuracy frequency estimation and compensation registers to measure and compensate for crystal inaccuracies. This compensation enables the use of lower cost crystals. If a TCXO is used, the CC1201 device automatically turns on and off the TCXO when needed to support low-power modes and Wake-On-Radio operation.

Copyright © 2013–2014, Texas Instruments Incorporated

5.3 Receiver

The CC1201 device features a highly flexible receiver. The received RF signal is amplified by the low-noise amplifier (LNA) and is down-converted in quadrature (I/Q) to the intermediate frequency (IF). At IF, the I/Q signals are digitized by the high dynamic-range ADCs.

An advanced automatic gain control (AGC) unit adjusts the front-end gain, and enables the CC1201 device to receive strong and weak signals, even in the presence of strong interferers. High-attenuation channel and data filtering enable reception with strong neighbor channel interferers. The I/Q signal is converted to a phase and magnitude signal to support the FSK and OOK modulation schemes.

NOTE

A unique I/Q compensation algorithm removes any problem of I/Q mismatch, thus avoiding time-consuming and costly I/Q image calibration steps.

5.4 Transmitter

The CC1201 transmitter is based on direct synthesis of the RF frequency (in-loop modulation). To use the spectrum effectively, the CC1201 device has extensive data filtering and shaping in TX mode to support high throughput data communication in narrowband channels. The modulator also controls power ramping to remove issues such as spectral splattering when driving external high-power RF amplifiers.

5.5 Radio Control and User Interface

The CC1201 digital control system is built around the main radio control (MARC), which is implemented using an internal high-performance, 16-bit ultra-low-power processor. MARC handles power modes, radio sequencing, and protocol timing.

A 4-wire SPI serial interface is used for configuration, strobe commands, and FIFO access. The digital baseband includes support for channel configuration, packet handling, and data buffering. The host MCU can stay in sleep mode until a valid RF packet is received. This greatly reduces power consumption. When the host MCU receives a valid RF packet, it burst-reads the data. This reduces the required computing power.

The CC1201 radio control and user interface are based on the widely used CC1101 transceiver. This relationship enables an easy transition between the two platforms. The command strobes and the main radio states are the same for the two platforms.

For legacy formats, the CC1201 device also supports two serial modes.

- Synchronous serial mode: The CC1201 device performs bit synchronization and provides the MCU with a bit clock with associated data.
- Transparent mode: The CC1201 device outputs the digital baseband signal using a digital interpolation filter to eliminate jitter introduced by digital filtering and demodulation.

5.6 Enhanced Wake-On-Radio (eWOR)

eWOR, using a flexible integrated sleep timer, enables automatic receiver polling with no intervention from the MCU. When the CC1201 device enters RX mode, it listens and then returns to sleep if a valid RF packet is not received. The sleep interval and duty cycle can be configured to make a trade-off between network latency and power consumption. Incoming messages are time-stamped to simplify timer re-synchronization.

The eWOR timer runs off an ultra-low-power RC oscillator. To improve timing accuracy, the RC oscillator can be automatically calibrated to the RF crystal in configurable intervals.

Copyright © 2013–2014, Texas Instruments Incorporated

5.7 RX Sniff Mode

The CC1201 device supports quick start up times, and requires few preamble bits. RX Sniff Mode uses these conditions to dramatically reduce the current consumption while the receiver is waiting for data.

Because the CC1201 device can wake up and settle much faster than the duration of most preambles, it is not required to be in RX mode continuously while waiting for a packet to arrive. Instead, the Enhanced Wake On Radio feature can be used to put the device into sleep mode periodically. By setting an appropriate sleep time, the CC1201 device can wake up and receive the packet when it arrives with no performance loss. This sequence removes the need for accurate timing synchronization between transmitter and receiver, and lets the user trade off current consumption between the transmitter and receiver.

For more information, see the sniff mode design note (SWRA428).

5.8 Antenna Diversity

Antenna diversity can increase performance in a multipath environment. An external antenna switch is required. The CC1201 device uses one of the GPIO pins to automatically control the switch. This device also supports differential output control signals typically used in RF switches.

If antenna diversity is enabled, the GPIO alternates between high and low states until a valid RF input signal is detected. An optional acknowledge packet can be transmitted without changing the state of the GPIO.

An incoming RF signal can be validated by received signal strength or by using the automatic preamble detector. Using the automatic preamble detector ensures a more robust system and avoids the need to set a defined signal strength threshold (such a threshold sets the sensitivity limit of the system).

Copyright © 2013–2014, Texas Instruments Incorporated

5.9 WaveMatch

Advanced capture logic locks onto the synchronization word and does not require preamble settling bytes. Therefore, receiver settling time is reduced to the settling time of the AGC, typically 4 bits.

The WaveMatch feature also greatly reduces false sync triggering on noise, further reducing the power consumption and improving sensitivity and reliability. The same logic can also be used as a high-performance preamble detector to reliably detect a valid preamble in the channel.

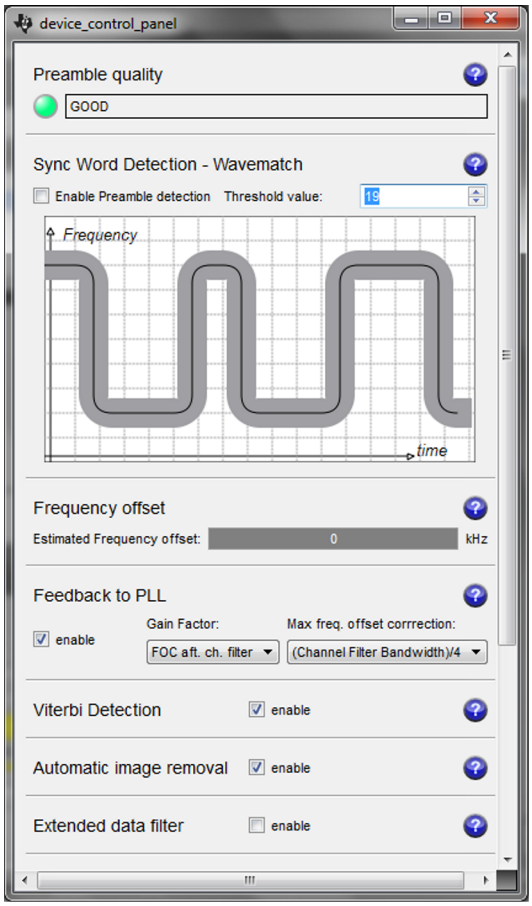

See swrc046 for more information.

Figure 5-2. Receiver Configurator in SmartRF™ Studio

Copyright © 2013–2014, Texas Instruments Incorporated

6 Typical Application Circuit

NOTE

This section is intended only as an introduction.

Very few external components are required for the operation of the CC1201 device. Figure 6-1 shows a typical application circuit. The board layout will greatly influence the performance of the CC1201 device. Figure 6-1 does not show decoupling capacitors for power pins.

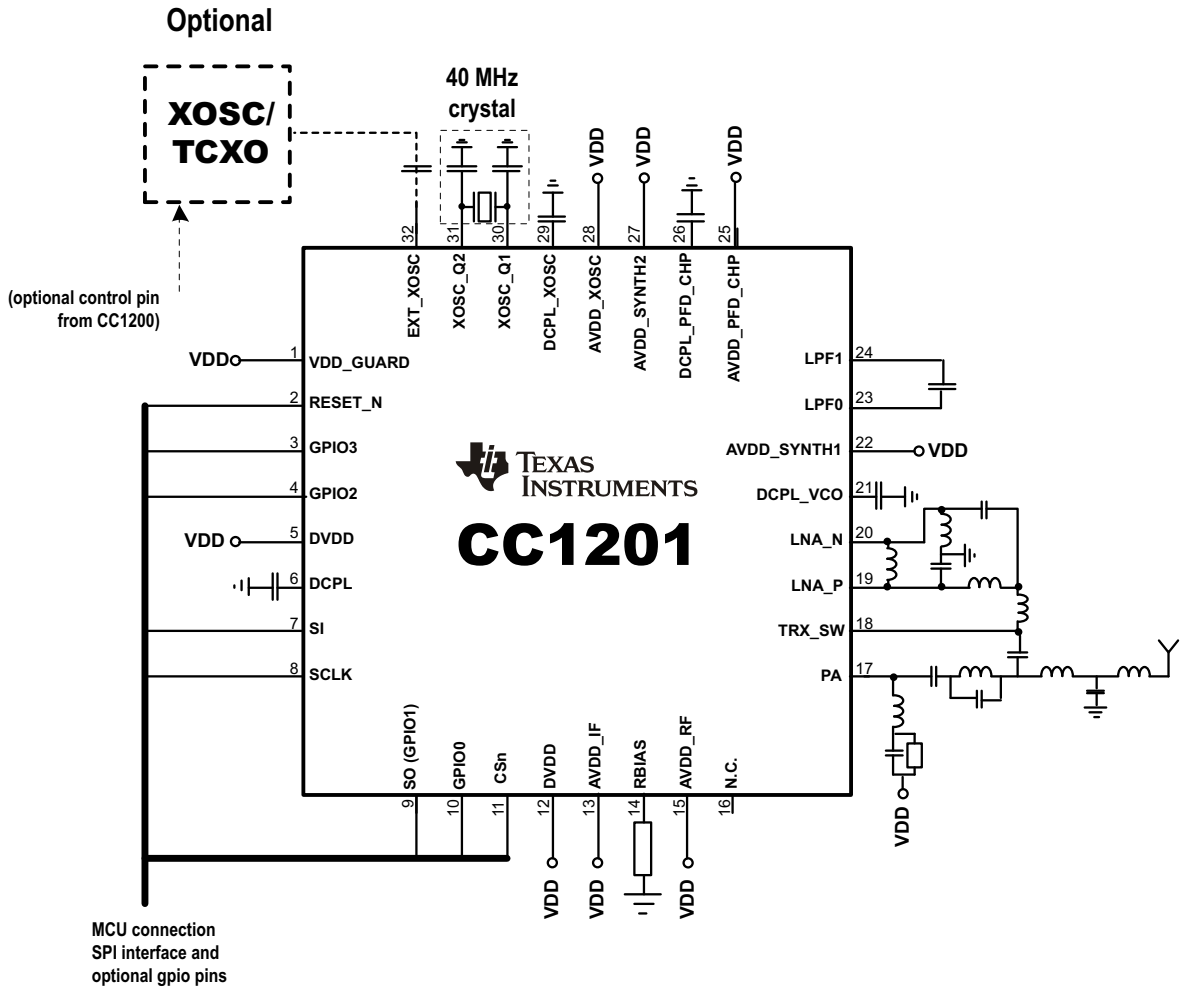

Figure 6-1. Typical Application Circuit

For more information, see the reference designs available for the CC1201 device in Section 7.2, *Documentation Support*.

7 Device and Documentation Support

7.1 Device Support

7.1.1 Development Support

7.1.1.1 Configuration Software

The CC1201 device can be configured using the SmartRF Studio software (SWRC046). The SmartRF Studio software is highly recommended for obtaining optimum register settings, and for evaluating performance and functionality.

7.1.2 Device and Development-Support Tool Nomenclature

To designate the stages in the product development cycle, TI assigns prefixes to the part numbers of all microprocessors (MPUs) and support tools. Each device has one of three prefixes: X, P, or null (no prefix) (for example, CC1201). Texas Instruments recommends two of three possible prefix designators for its support tools: TMDX and TMDS. These prefixes represent evolutionary stages of product development from engineering prototypes (TMDX) through fully qualified production devices and tools (TMDS).

Device development evolutionary flow:

X Experimental device that is not necessarily representative of the final device's electrical specifications and may not use production assembly flow.

P Prototype device that is not necessarily the final silicon die and may not necessarily meet final electrical specifications.

null Production version of the silicon die that is fully qualified.

Support tool development evolutionary flow:

TMDX Development-support product that has not yet completed Texas Instruments internal qualification testing.

TMDS Fully qualified development-support product.

X and P devices and TMDX development-support tools are shipped against the following disclaimer:

"Developmental product is intended for internal evaluation purposes."

Production devices and TMDS development-support tools have been characterized fully, and the quality and reliability of the device have been demonstrated fully. TI's standard warranty applies.

Predictions show that prototype devices (X or P) have a greater failure rate than the standard production devices. Texas Instruments recommends that these devices not be used in any production system because their expected end-use failure rate still is undefined. Only qualified production devices are to be used.

TI device nomenclature also includes a suffix with the device family name. This suffix indicates the package type (for example, RHB), the temperature range (for example, blank is the default commercial temperature range), and the device speed range, in megahertz. provides a legend for reading the complete device name for any CC1201 device.

For orderable part numbers of CC1201 devices in the QFN package types, see the Package Option Addendum of this document, the TI website (www.ti.com), or contact your TI sales representative.

Copyright © 2013–2014, Texas Instruments Incorporated

7.2 Documentation Support

The following documents describe the CC1201 processor. Copies of these documents are available on the Internet at www.ti.com. *Tip:* Enter the literature number in the search box provided at www.ti.com.

SWRR106 CC112x IPC 868- and 915-MHz 2-layer Reference Design

SWRR107 CC112x IPC 868- and 915-MHz 4-layer Reference Design

SWRR122 CC1201EM 420- to 470-MHz Reference Design

SWRR121 CC1201EM 868- to 930-MHz Reference Design

SWRC046 SmartRF Studio Software

SWRA428 CC112x/CC120x Sniff Mode Application Note

7.3 Community Resources

The following links connect to TI community resources. Linked contents are provided "AS IS" by the respective contributors. They do not constitute TI specifications and do not necessarily reflect TI's views; see TI's Terms of Use.

TI E2E™ Online Community ***TI's Engineer-to-Engineer (E2E) Community.*** Created to foster collaboration among engineers. At e2e.ti.com, you can ask questions, share knowledge, explore ideas and help solve problems with fellow engineers.

TI Embedded Processors Wiki ***Texas Instruments Embedded Processors Wiki.*** Established to help developers get started with Embedded Processors from Texas Instruments and to foster innovation and growth of general knowledge about the hardware and software surrounding these devices.

7.4 Trademarks

SmartRF, E2E are trademarks of Texas Instruments.
All other trademarks are the property of their respective owners.

7.5 Electrostatic Discharge Caution



This integrated circuit can be damaged by ESD. Texas Instruments recommends that all integrated circuits be handled with appropriate precautions. Failure to observe proper handling and installation procedures can cause damage.

ESD damage can range from subtle performance degradation to complete device failure. Precision integrated circuits may be more susceptible to damage because very small parametric changes could cause the device not to meet its published specifications.

7.6 Glossary

SLYZ022 — *TI Glossary*.

This glossary lists and explains terms, acronyms, and definitions.

Copyright © 2013–2014, Texas Instruments Incorporated

8 Mechanical Packaging and Orderable Information

The following pages include mechanical packaging and orderable information. This information is the most current data available for the designated devices. This data is subject to change without notice and revision of this document. For browser-based versions of this data sheet, refer to the left-hand navigation.

Copyright © 2013–2014, Texas Instruments Incorporated

PACKAGING INFORMATION

Orderable Device	Status (1)	Package Type	Package Drawing	Pins	Package Qty	Eco Plan (2)	Lead/Ball Finish (6)	MSL Peak Temp (3)	Op Temp (°C)	Device Marking (4/5)	Samples
CC1201RHBR	ACTIVE	VQFN	RHB	32	3000	Green (RoHS & no Sb/Br)	CU NIPDAU	Level-3-260C-168 HR	-40 to 85	CC1201	Samples
CC1201RHBT	ACTIVE	VQFN	RHB	32	250	Green (RoHS & no Sb/Br)	CU NIPDAU	Level-3-260C-168 HR	-40 to 85	CC1201	Samples

(1) The marketing status values are defined as follows:
ACTIVE: Product device recommended for new designs.
LIFEBUY: TI has announced that the device will be discontinued, and a lifetime-buy period is in effect.
NRND: Not recommended for new designs. Device is in production to support existing customers, but TI does not recommend using this part in a new design.
PREVIEW: Device has been announced but is not in production. Samples may or may not be available.
OBSOLETE: TI has discontinued the production of the device.

(2) Eco Plan - The planned eco-friendly classification: Pb-Free (RoHS), Pb-Free (RoHS Exempt), or Green (RoHS & no Sb/Br) - please check http://www.ti.com/productcontent for the latest availability information and additional product content details.
TBD: The Pb-Free/Green conversion plan has not been defined.
Pb-Free (RoHS): TI's terms "Lead-Free" or "Pb-Free" mean semiconductor products that are compatible with the current RoHS requirements for all 6 substances, including the requirement that lead not exceed 0.1% by weight in homogeneous materials. Where designed to be soldered at high temperatures, TI Pb-Free products are suitable for use in specified lead-free processes.
Pb-Free (RoHS Exempt): This component has a RoHS exemption for either 1) lead-based flip-chip solder bumps used between the die and package, or 2) lead-based die adhesive used between the die and leadframe. The component is otherwise considered Pb-Free (RoHS compatible) as defined above.
Green (RoHS & no Sb/Br): TI defines "Green" to mean Pb-Free (RoHS compatible), and free of Bromine (Br) and Antimony (Sb) based flame retardants (Br or Sb do not exceed 0.1% by weight in homogeneous material)

(3) MSL, Peak Temp. - The Moisture Sensitivity Level rating according to the JEDEC industry standard classifications, and peak solder temperature.

(4) There may be additional marking, which relates to the logo, the lot trace code information, or the environmental category on the device.

(5) Multiple Device Markings will be inside parentheses. Only one Device Marking contained in parentheses and separated by a "~" will appear on a device. If a line is indented then it is a continuation of the previous line and the two combined represent the entire Device Marking for that device.

(6) Lead/Ball Finish - Orderable Devices may have multiple material finish options. Finish options are separated by a vertical ruled line. Lead/Ball Finish values may wrap to two lines if the finish value exceeds the maximum column width.

Important Information and Disclaimer: The information provided on this page represents TI's knowledge and belief as of the date that it is provided. TI bases its knowledge and belief on information provided by third parties, and makes no representation or warranty as to the accuracy of such information. Efforts are underway to better integrate information from third parties. TI has taken and continues to take reasonable steps to provide representative and accurate information but may not have conducted destructive testing or chemical analysis on incoming materials and chemicals. TI and TI suppliers consider certain information to be proprietary, and thus CAS numbers and other limited information may not be available for release.

In no event shall TI's liability arising out of such information exceed the total purchase price of the TI part(s) at issue in this document sold by TI to Customer on an annual basis.

TAPE AND REEL INFORMATION

REEL DIMENSIONS

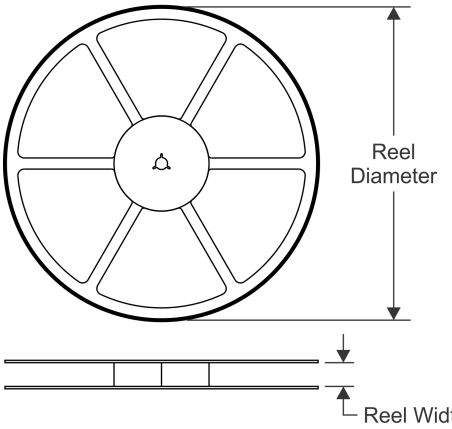

TAPE DIMENSIONS

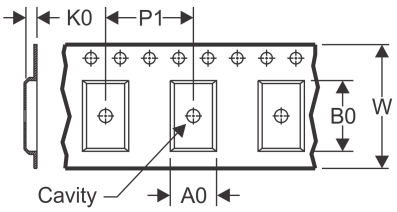

A0	Dimension designed to accommodate the component width
B0	Dimension designed to accommodate the component length
K0	Dimension designed to accommodate the component thickness
W	Overall width of the carrier tape
P1	Pitch between successive cavity centers

QUADRANT ASSIGNMENTS FOR PIN 1 ORIENTATION IN TAPE

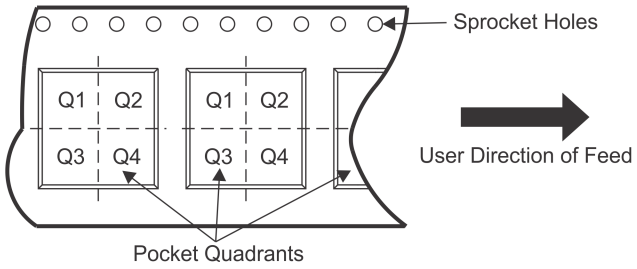

*All dimensions are nominal

Device	Package Type	Package Drawing	Pins	SPQ	Reel Diameter (mm)	Reel Width W1 (mm)	A0 (mm)	B0 (mm)	K0 (mm)	P1 (mm)	W (mm)	Pin1 Quadrant
CC1201RHBR	VQFN	RHB	32	3000	330.0	12.4	5.3	5.3	1.5	8.0	12.0	Q2
CC1201RHBT	VQFN	RHB	32	250	180.0	12.4	5.3	5.3	1.5	8.0	12.0	Q2

TAPE AND REEL BOX DIMENSIONS

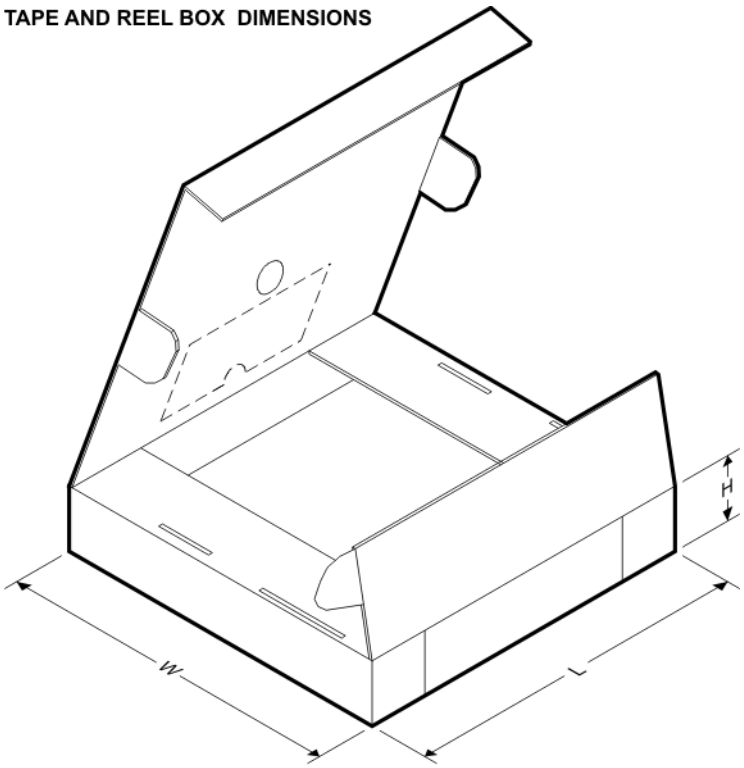

*All dimensions are nominal

Device	Package Type	Package Drawing	Pins	SPQ	Length (mm)	Width (mm)	Height (mm)
CC1201RHBR	VQFN	RHB	32	3000	338.1	338.1	20.6
CC1201RHBT	VQFN	RHB	32	250	210.0	185.0	35.0

RHB (S–PVQFN–N32) PLASTIC QUAD FLATPACK NO–LEAD

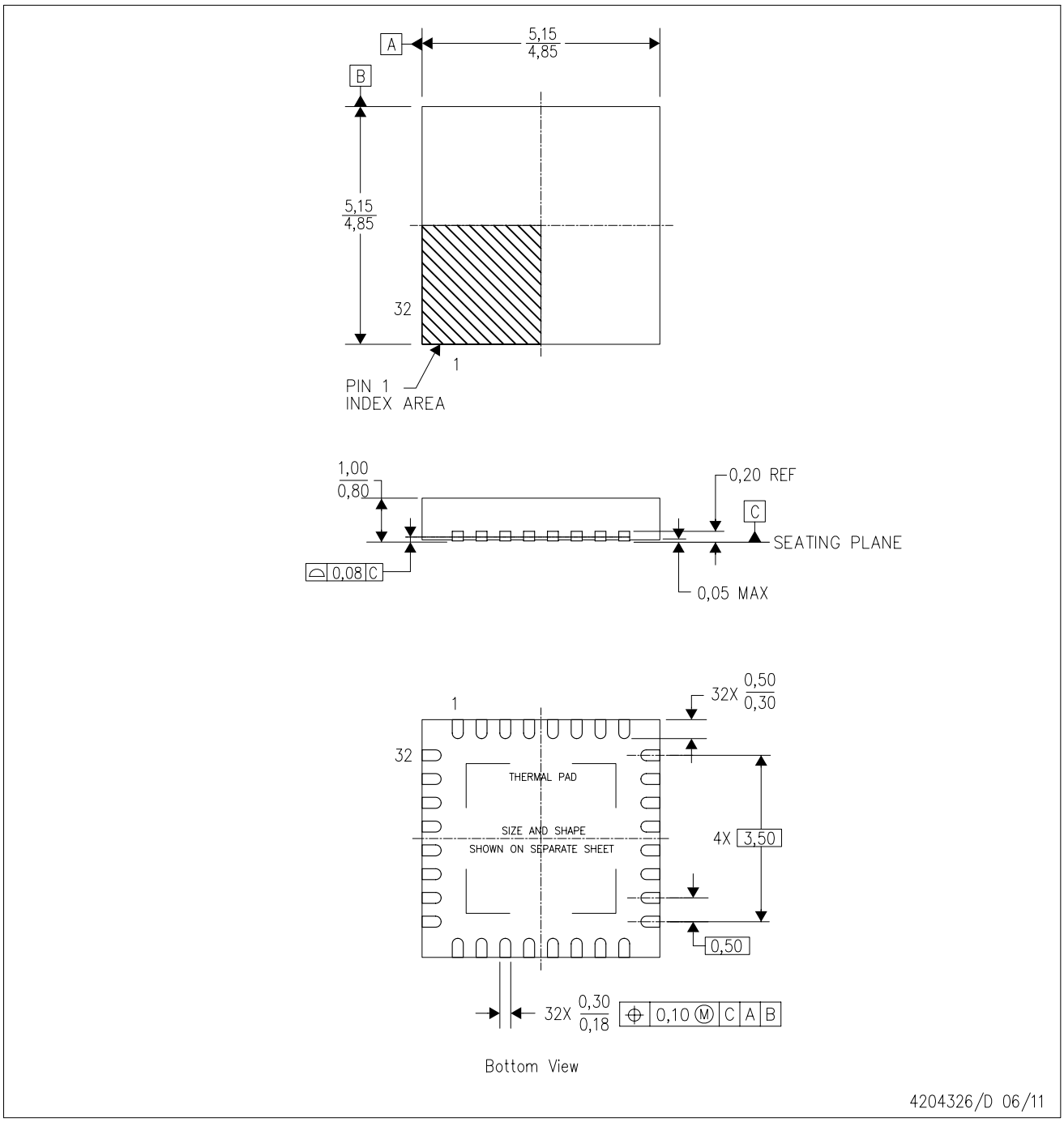

NOTES:
A. All linear dimensions are in millimeters. Dimensioning and tolerancing per ASME Y14.5M–1994.
B. This drawing is subject to change without notice.
C. QFN (Quad Flatpack No–Lead) Package configuration.
D. The package thermal pad must be soldered to the board for thermal and mechanical performance.
E. See the additional figure in the Product Data Sheet for details regarding the exposed thermal pad features and dimensions.
F. Falls within JEDEC MO–220.

RHB (S–PVQFN–N32) PLASTIC QUAD FLATPACK NO–LEAD

THERMAL INFORMATION

This package incorporates an exposed thermal pad that is designed to be attached directly to an external heatsink. The thermal pad must be soldered directly to the printed circuit board (PCB). After soldering, the PCB can be used as a heatsink. In addition, through the use of thermal vias, the thermal pad can be attached directly to the appropriate copper plane shown in the electrical schematic for the device, or alternatively, can be attached to a special heatsink structure designed into the PCB. This design optimizes the heat transfer from the integrated circuit (IC).

For information on the Quad Flatpack No–Lead (QFN) package and its advantages, refer to Application Report, QFN/SON PCB Attachment, Texas Instruments Literature No. SLUA271. This document is available at www.ti.com.

The exposed thermal pad dimensions for this package are shown in the following illustration.

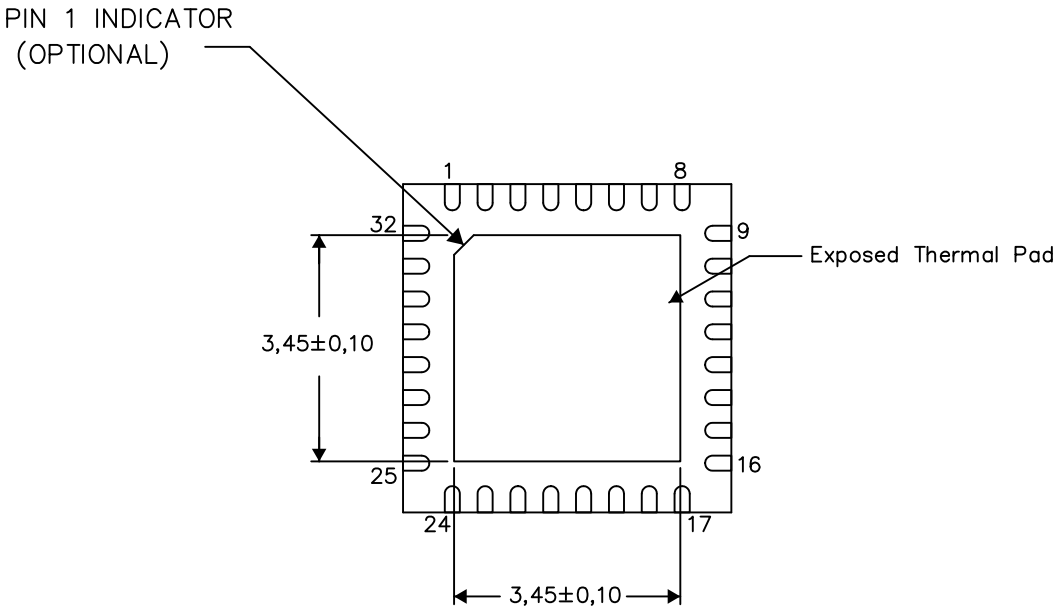

Bottom View

Exposed Thermal Pad Dimensions

4206356–2/AC 05/15

NOTE: A. All linear dimensions are in millimeters

RHB (S–PVQFN–N32) PLASTIC QUAD FLATPACK NO–LEAD

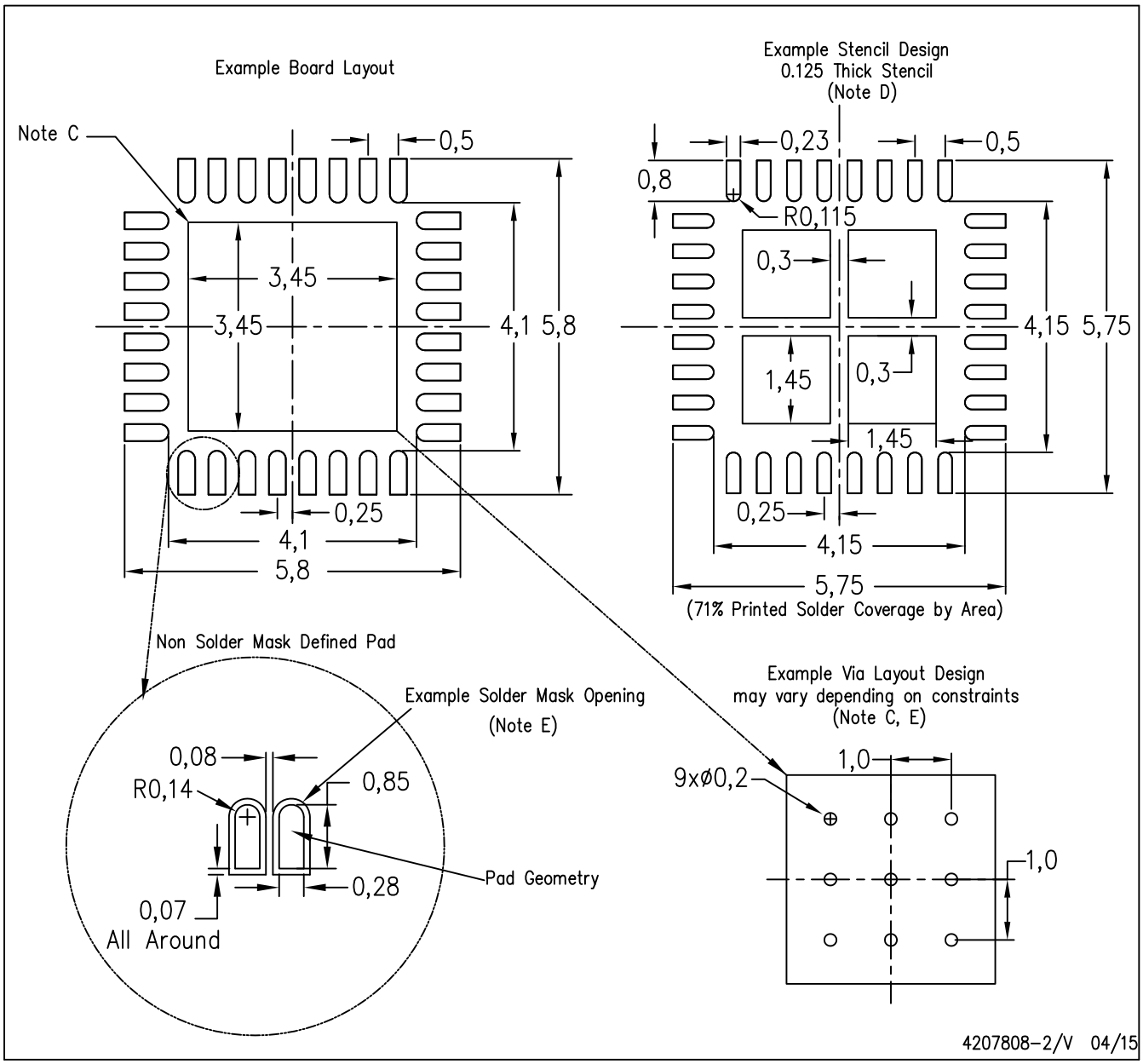

NOTES:
A. All linear dimensions are in millimeters.
B. This drawing is subject to change without notice.
C. This package is designed to be soldered to a thermal pad on the board. Refer to Application Note, Quad Flat–Pack Packages, Texas Instruments Literature No. SLUA271, and also the Product Data Sheets for specific thermal information, via requirements, and recommended board layout. These documents are available at www.ti.com <http://www.ti.com>.
D. Laser cutting apertures with trapezoidal walls and also rounding corners will offer better paste release. Customers should contact their board assembly site for stencil design recommendations. Refer to IPC 7525 for stencil design considerations.
E. Customers should contact their board fabrication site for recommended solder mask tolerances and via tenting recommendations for any larger diameter vias placed in the thermal pad.

RHM (S–PVQFN–N32) PLASTIC QUAD FLATPACK NO–LEAD

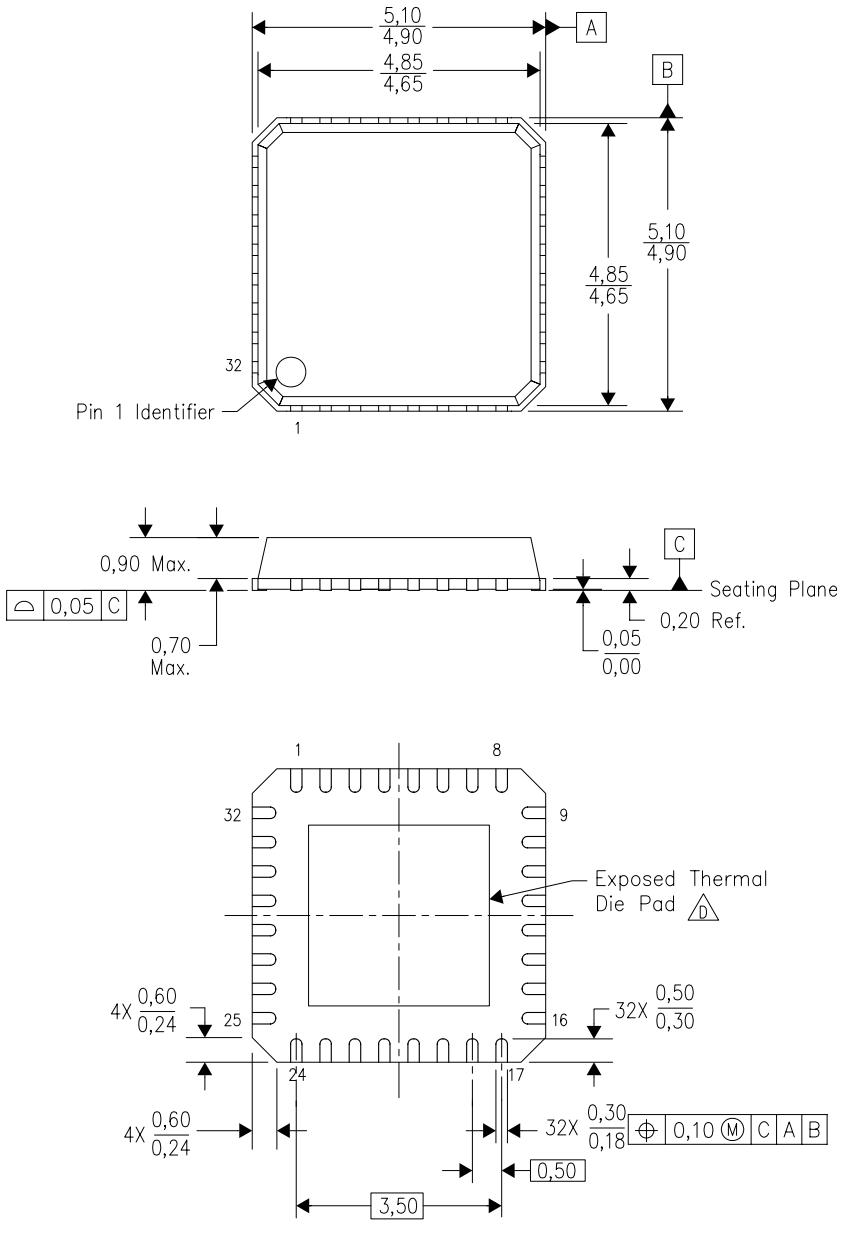

4205347/B 04/10

NOTES:
A. All linear dimensions are in millimeters. Dimensioning and tolerancing per ASME Y14.5M–1994.
B. This drawing is subject to change without notice.
C. QFN (Quad Flatpack No–Lead) Package configuration.
D. The package thermal pad must be soldered to the board for thermal and mechanical performance. See the Product Data Sheet for details regarding the exposed thermal pad dimensions.

IMPORTANT NOTICE

Texas Instruments Incorporated and its subsidiaries (TI) reserve the right to make corrections, enhancements, improvements and other changes to its semiconductor products and services per JESD46, latest issue, and to discontinue any product or service per JESD48, latest issue. Buyers should obtain the latest relevant information before placing orders and should verify that such information is current and complete. All semiconductor products (also referred to herein as “components”) are sold subject to TI’s terms and conditions of sale supplied at the time of order acknowledgment.

TI warrants performance of its components to the specifications applicable at the time of sale, in accordance with the warranty in TI’s terms and conditions of sale of semiconductor products. Testing and other quality control techniques are used to the extent TI deems necessary to support this warranty. Except where mandated by applicable law, testing of all parameters of each component is not necessarily performed.

TI assumes no liability for applications assistance or the design of Buyers’ products. Buyers are responsible for their products and applications using TI components. To minimize the risks associated with Buyers’ products and applications, Buyers should provide adequate design and operating safeguards.

TI does not warrant or represent that any license, either express or implied, is granted under any patent right, copyright, mask work right, or other intellectual property right relating to any combination, machine, or process in which TI components or services are used. Information published by TI regarding third-party products or services does not constitute a license to use such products or services or a warranty or endorsement thereof. Use of such information may require a license from a third party under the patents or other intellectual property of the third party, or a license from TI under the patents or other intellectual property of TI.

Reproduction of significant portions of TI information in TI data books or data sheets is permissible only if reproduction is without alteration and is accompanied by all associated warranties, conditions, limitations, and notices. TI is not responsible or liable for such altered documentation. Information of third parties may be subject to additional restrictions.

Resale of TI components or services with statements different from or beyond the parameters stated by TI for that component or service voids all express and any implied warranties for the associated TI component or service and is an unfair and deceptive business practice. TI is not responsible or liable for any such statements.

Buyer acknowledges and agrees that it is solely responsible for compliance with all legal, regulatory and safety-related requirements concerning its products, and any use of TI components in its applications, notwithstanding any applications-related information or support that may be provided by TI. Buyer represents and agrees that it has all the necessary expertise to create and implement safeguards which anticipate dangerous consequences of failures, monitor failures and their consequences, lessen the likelihood of failures that might cause harm and take appropriate remedial actions. Buyer will fully indemnify TI and its representatives against any damages arising out of the use of any TI components in safety-critical applications.

In some cases, TI components may be promoted specifically to facilitate safety-related applications. With such components, TI’s goal is to help enable customers to design and create their own end-product solutions that meet applicable functional safety standards and requirements. Nonetheless, such components are subject to these terms.

No TI components are authorized for use in FDA Class III (or similar life-critical medical equipment) unless authorized officers of the parties have executed a special agreement specifically governing such use.

Only those TI components which TI has specifically designated as military grade or “enhanced plastic” are designed and intended for use in military/aerospace applications or environments. Buyer acknowledges and agrees that any military or aerospace use of TI components which have ***not*** been so designated is solely at the Buyer's risk, and that Buyer is solely responsible for compliance with all legal and regulatory requirements in connection with such use.

TI has specifically designated certain components as meeting ISO/TS16949 requirements, mainly for automotive use. In any case of use of non-designated products, TI will not be responsible for any failure to meet ISO/TS16949.

Products		**Applications**	
Audio	www.ti.com/audio	Automotive and Transportation	www.ti.com/automotive
Amplifiers	amplifier.ti.com	Communications and Telecom	www.ti.com/communications
Data Converters	dataconverter.ti.com	Computers and Peripherals	www.ti.com/computers
DLP® Products	www.dlp.com	Consumer Electronics	www.ti.com/consumer-apps
DSP	dsp.ti.com	Energy and Lighting	www.ti.com/energy
Clocks and Timers	www.ti.com/clocks	Industrial	www.ti.com/industrial
Interface	interface.ti.com	Medical	www.ti.com/medical
Logic	logic.ti.com	Security	www.ti.com/security
Power Mgmt	power.ti.com	Space, Avionics and Defense	www.ti.com/space-avionics-defense
Microcontrollers	microcontroller.ti.com	Video and Imaging	www.ti.com/video
RFID	www.ti-rfid.com		
OMAP Applications Processors	www.ti.com/omap	**TI E2E Community**	e2e.ti.com
Wireless Connectivity	www.ti.com/wirelessconnectivity		

Mailing Address: Texas Instruments, Post Office Box 655303, Dallas, Texas 75265
Copyright © 2016, Texas Instruments Incorporated