CC115L Value Line Transmitter

1 Device Overview

1.1 Features

- **RF Performance**
  - Programmable Output Power up to +12 dBm
  - Programmable Data Rate from 0.6 to 600 kbps
  - Frequency Bands: 300–348 MHz, 387–464 MHz, and 779–928 MHz
  - 2-FSK, 4-FSK, GFSK, and OOK Supported
- **Digital Features**
  - Flexible Support for Packet Oriented Systems
  - On-chip Support for Sync Word Insertion, Flexible Packet Length, and Automatic CRC Calculation
- **Low-Power Features**
  - 200-nA Sleep Mode Current Consumption
  - Fast Startup Time; 240 µs From Sleep to TX Mode
  - 64-Byte TX FIFO
- **General**
  - Few External Components; Fully Integrated Frequency Synthesizer
  - Green Package: RoHS Compliant and No Antimony or Bromine
  - Small Size (QLP 4- x 4-mm Package, 20 Pins)
  - Suited for Systems Targeting Compliance with EN 300 220 V2.3.1 (Europe) and FCC CFR Part 15 (US)
  - Support for Asynchronous and Synchronous Serial Transmit Mode for Backward Compatibility with Existing Radio Communication Protocols

1.2 Applications

- Ultra Low-Power Wireless Applications Operating in the 315-, 433-, 868-, 915-MHz ISM or SRD Bands
- Wireless Alarm and Security Systems
- Industrial Monitoring and Control
- Remote Controls
- Toys
- Home and Building Automation
- Active RFID

1.3 Description

The CC115L is a cost optimized sub-1 GHz RF transmitter. The circuit is based on the popular CC1101 RF transceiver, and RF performance characteristics are identical. The CC115L value line transmitter together with the CC113L value line receiver enables a low-cost RF link.

The RF transmitter is integrated with a highly configurable baseband modulator. The modem supports various modulation formats and has a configurable data rates from 0.6 to 600 kbps.

The CC115L provides extensive hardware support for packet handling, data buffering, and burst transmissions.

The main operating parameters and the 64-byte transmit FIFO of CC115L can be controlled through a serial peripheral interface (SPI). In a typical system, the CC115L will be used together with a microcontroller and a few additional passive components.

Device Information(1)

PART NUMBER	PACKAGE	BODY SIZE
CC115LRGP	QFN (20)	4.00 mm × 4.00 mm

(1) For more information on these devices, see Section 8, Mechanical Packaging and Orderable Information.

An IMPORTANT NOTICE at the end of this data sheet addresses availability, warranty, changes, use in safety-critical applications, intellectual property matters and other important disclaimers. PRODUCTION DATA.

1.4 Functional Block Diagram

Figure 1-1 shows a functional block diagram of the device.

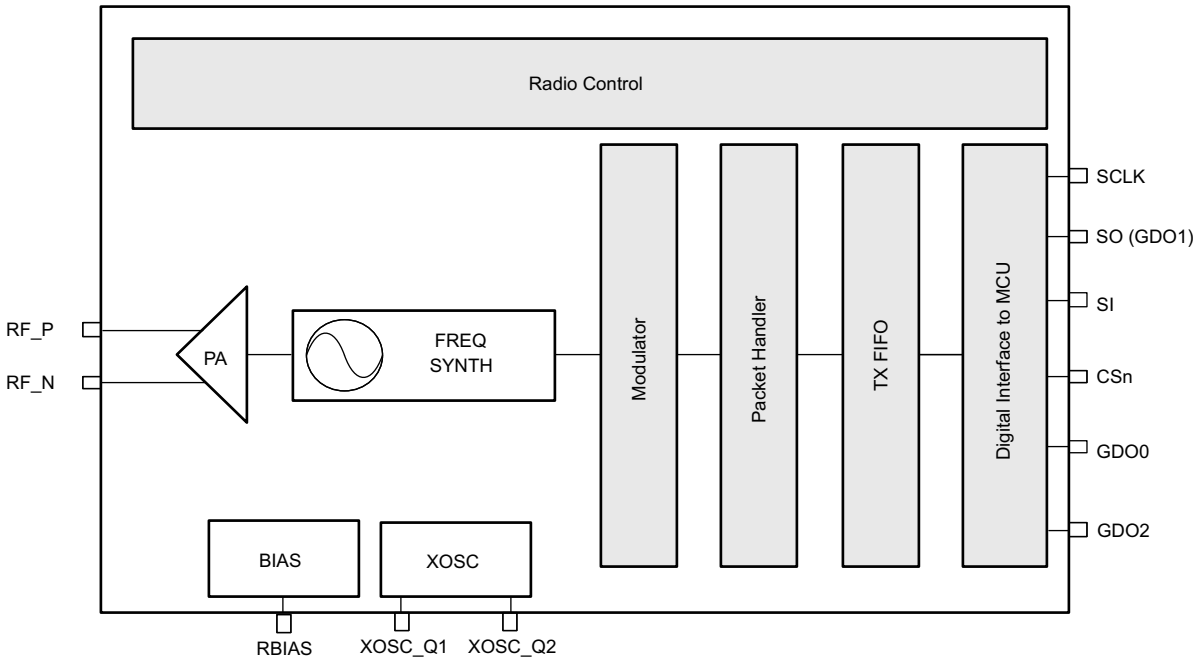

Figure 1-1. Functional Block Diagram

Copyright © 2011–2014, Texas Instruments Incorporated

Table of Contents

1 Device Overview **1**
1.1 Features 1
1.2 Applications 1
1.3 Description 1
1.4 Functional Block Diagram 2
2 Revision History **4**
3 Terminal Configuration and Functions **5**
3.1 Pin Diagram 5
3.2 Signal Descriptions 6
4 Specifications **7**
4.1 Absolute Maximum Ratings 7
4.2 Handling Ratings 7
4.3 Recommended Operating Conditions 7
4.4 General Characteristics 7
4.5 Current Consumption 8
4.6 RF Transmit Section 9
4.7 Crystal Oscillator 11
4.8 Frequency Synthesizer Characteristics 11
4.9 DC Characteristics 11
4.10 Power-On Reset 12
4.11 Thermal Characteristics 12
5 Detailed Description **13**
5.1 Overview 13
5.2 Functional Block Diagram 13
5.3 Configuration Overview 14
5.4 Configuration Software 16
5.5 4-wire Serial Configuration and Data Interface 17
5.6 Microcontroller Interface and Pin Configuration 21
5.7 Data Rate Programming 22
5.8 Packet Handling Hardware Support 23
5.9 Modulation Formats 26
5.10 Radio Control 27
5.11 TX FIFO 32
5.12 Frequency Programming 34
5.13 VCO 35
5.14 Voltage Regulators 35
5.15 Output Power Programming 36
5.16 General Purpose and Test Output Control Pins 38
5.17 Asynchronous and Synchronous Serial Operation 40
5.18 System Considerations and Guidelines 41
5.19 Configuration Registers 43
5.20 Development Kit Ordering Information 57
6 Applications, Implementation, and Layout **58**
6.1 Bias Resistor 58
6.2 Balun and RF Matching 58
6.3 Crystal 60
6.4 Reference Signal 60
6.5 Additional Filtering 60
6.6 Power Supply Decoupling 60
6.7 PCB Layout Recommendations 61
7 Device and Documentation Support **62**
7.1 Device Support 62
7.2 Documentation Support 63
7.3 Trademarks 63
7.4 Electrostatic Discharge Caution 64
7.5 Export Control Notice 64
7.6 Glossary 64
7.7 Additional Acronyms 64
8 Mechanical Packaging and Orderable Information **66**
8.1 Packaging Information 66

Copyright © 2011–2014, Texas Instruments Incorporated

2 Revision History

NOTE: Page numbers for previous revisions may differ from page numbers in the current version.

Changes from Revision A (September 2011) to Revision B	Page
• Changed format of data sheet to standard TI format.	1
• Changed reset value from 0x09 to 0x19	55
• Changed the package designator from RTK to RGP	66

Copyright © 2011–2014, Texas Instruments Incorporated

3 Terminal Configuration and Functions

3.1 Pin Diagram

The CC115L pinout is shown in Figure 3-1 and Table 3-1. See Section 5.16 for details on the I/O configuration.

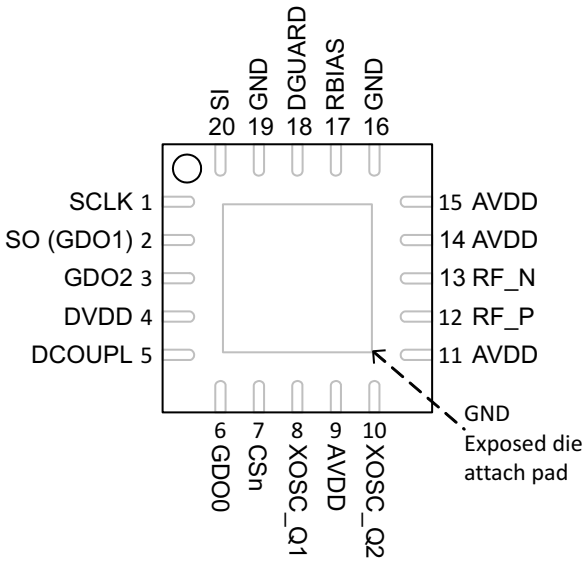

Figure 3-1. Pinout Top View

NOTE

The exposed die attach pad must be connected to a solid ground plane as this is the main ground connection for the chip.

3.2 Signal Descriptions

Table 3-1. Signal Descriptions

Pin No.	Pin Name	Pin Type	Description
1	SCLK	Digital Input	Serial configuration interface, clock input
2	SO (GDO1)	Digital Output	Serial configuration interface, data output Optional general output pin when CSn is high
3	GDO2	Digital Output	Digital output pin for general use: • Test signals • TX FIFO status signals • Clock output, down-divided from XOSC
4	DVDD	Power (Digital)	1.8 - 3.6 V digital power supply for digital I/Os and for the digital core voltage regulator
5	DCOUPL	Power (Digital)	1.6 - 2.0 V digital power supply output for decoupling NOTE: This pin is intended for use with the CC115L only. It can not be used to provide supply voltage to other devices
6	GDO0	Digital I/O	Digital output pin for general use: • Test signals • TX FIFO status signals • Clock output, down-divided from XOSC • Serial input TX data
7	CSn	Digital Input	Serial configuration interface, chip select
8	XOSC_Q1	Analog I/O	Crystal oscillator pin 1, or external clock input
9	AVDD	Power (Analog)	1.8 - 3.6 V analog power supply connection
10	XOSC_Q2	Analog I/O	Crystal oscillator pin 2
11	AVDD	Power (Analog)	1.8 - 3.6 V analog power supply connection
12	RF_P	RF I/O	Positive RF output signal from PA in transmit mode
13	RF_N	RF I/O	Negative RF output signal from PA in transmit mode
14	AVDD	Power (Analog)	1.8 - 3.6 V analog power supply connection
15	AVDD	Power (Analog)	1.8 - 3.6 V analog power supply connection
16	GND	Ground (Analog)	Analog ground connection
17	RBIAS	Analog I/O	External bias resistor for reference current
18	DGUARD	Power (Digital)	Power supply connection for digital noise isolation
19	GND	Ground (Digital)	Ground connection for digital noise isolation
20	SI	Digital Input	Serial configuration interface, data input

Copyright © 2011–2014, Texas Instruments Incorporated

4 Specifications

4.1 Absolute Maximum Ratings

Under no circumstances must the absolute maximum ratings be violated. Stress exceeding one or more of the limiting values may cause permanent damage to the device.

Parameter	Min	Max	Unit	Condition
Supply voltage	–0.3	3.9	V	All supply pins must have the same voltage
Voltage on any digital pin	–0.3	VDD + 0.3, max 3.9	V	
Voltage on the pins RF_P, RF_N, DCOUPL, RBIAS	–0.3	2.0	V	
Voltage ramp-up rate		120	kV/µs	
Input RF level		+10	dBm	

4.2 Handling Ratings

Parameter		MIN	MAX	UNIT
Storage temperature range, T_{stg}	(default)	–50	150	°C
ESD Stress Voltage, V_{ESD}	Human Body Model (HBM), per ANSI/ESDA/JEDEC JS001 (1)		750	V
	Charged Device Model (CDM), per JJESD22-C101 (2)		400	V

(1) JEDEC document JEP155 states that 500-V HBM allows safe manufacturing with a standard ESD control process.
(2) JEDEC document JEP157 states that 250-V HBM allows safe manufacturing with a standard ESD control process.

4.3 Recommended Operating Conditions

Parameter	Min	Max	Unit	Condition
Operating temperature	–40	85	°C	
Operating supply voltage	1.8	3.6	V	All supply pins must have the same voltage

4.4 General Characteristics

Parameter	Min	Typ	Max	Unit	Condition
Frequency range	300		348	MHz	
	387		464	MHz	If using a 27 MHz crystal, the lower frequency limit for this band is 392 MHz
	779		928	MHz	
Data rate	0.6		500	kBaud	2-FSK
	0.6		250	kBaud	GFSK and OOK
	0.6		300	kBaud	4-FSK (the data rate in kbps will be twice the baud rate) Optional Manchester encoding (the data rate in kbps will be half the baud rate)

Copyright © 2011–2014, Texas Instruments Incorporated

4.5 Current Consumption

T_A = 25°C, VDD = 3.0 V if nothing else stated. All measurement results are obtained using SWRR046 and SWRR045.

Parameter	Min	Typ	Max	Unit	Condition
Current consumption in power down modes		0.2	1	µA	Voltage regulator to digital part off, register values retained (SLEEP state). All GDO pins programmed to 0x2F (HW to 0)
		100		µA	Voltage regulator to digital part off, register values retained, XOSC running (SLEEP state with MCSM0.OSC_FORCE_ON set)
		165		µA	Voltage regulator to digital part on, all other modules in power down (XOFF state)
Current consumption		1.7		mA	Only voltage regulator to digital part and crystal oscillator running (IDLE state)
		8.4		mA	Only the frequency synthesizer is running (FSTXON state). This current consumption is also representative for the other intermediate states when going from IDLE to TX, including the calibration state
Current consumption, 315 MHz		27.4		mA	Transmit mode, +10 dBm output power
		15.0		mA	Transmit mode, 0 dBm output power
		12.3		mA	Transmit mode, –6 dBm output power
Current consumption, 433 MHz		29.2		mA	Transmit mode, +10 dBm output power
		16.0		mA	Transmit mode, 0 dBm output power
		13.1		mA	Transmit mode, –6 dBm output power
Current consumption, 868/915 MHz		34.2		mA	Transmit mode, +12 dBm output power, 868 MHz
		30.0		mA	Transmit mode, +10 dBm output power, 868 MHz
		16.8		mA	Transmit mode, 0 dBm output power, 868 MHz
		16.4		mA	Transmit mode, –6 dBm output power, 868 MHz.
		33.4		mA	Transmit mode, +11 dBm output power, 915 MHz
		30.7		mA	Transmit mode, +10 dBm output power, 915 MHz
		17.2		mA	Transmit mode, 0 dBm output power, 915 MHz
		17.0		mA	Transmit mode, –6 dBm output power, 915 MHz

4.5.1 Typical TX Current Consumption over Temperature and Supply Voltage, 868 MHz

	Supply Voltage VDD = 1.8 V			Supply Voltage VDD = 3.0 V			Supply Voltage VDD = 3.6 V		
Temperature [°C]	−40	25	85	−40	25	85	−40	25	85
Current [mA], PATABLE=0xC0, +12 dBm	32.7	31.5	30.5	35.3	34.2	33.3	35.5	34.4	33.5
Current [mA], PATABLE=0xC5, +10 dBm	30.1	29.2	28.3	30.9	30.0	29.4	31.1	30.3	29.6
Current [mA], PATABLE=0x50, 0 dBm	16.4	16.0	15.6	17.3	16.8	16.4	17.6	17.1	16.7

4.5.2 Typical TX Current Consumption over Temperature and Supply Voltage, 915 MHz

	Supply Voltage VDD = 1.8 V			Supply Voltage VDD = 3.0 V			Supply Voltage VDD = 3.6 V		
Temperature [°C]	−40	25	85	−40	25	85	−40	25	85
Current [mA], PATABLE=0xC0, +11 dBm	31.9	30.7	29.8	34.6	33.4	32.5	34.8	33.6	32.7
Current [mA], PATABLE=0xC3, +10 dBm	30.9	29.8	28.9	31.7	30.7	30.0	31.9	31.0	30.2
Current [mA], PATABLE=0x8E, 0 dBm	17.2	16.8	16.4	17.6	17.2	16.9	17.8	17.4	17.1

Copyright © 2011–2014, Texas Instruments Incorporated

4.6 RF Transmit Section

T_A = 25°C, VDD = 3.0 V, +10 dBm if nothing else stated. All measurement results are obtained using SWRR046 and SWRR045.

Parameter	Min	Typ	Max	Unit	Condition
Differential load impedance					
315 MHz		122 + j31		Ω	Differential impedance as seen from the RF-port (RF_P and RF_N) towards the antenna.
433 MHz		116 + j41		Ω	
868/915 MHz		86.5 + j43		Ω	
Output power, highest setting					Output power is programmable, and full range is available in all frequency bands. Output power may be restricted by regulatory limits. See Design Note DN013 SWRA168, which gives the output power and harmonics when using multi-layer inductors. The output power is then typically +10 dBm when operating at 868/915 MHz. Delivered to a 50-Ω single-ended load through the RF matching network in SWRR046 and SWRR045
315 MHz		+10		dBm	
433 MHz		+10		dBm	
868 MHz		+12		dBm	
915 MHz		+11		dBm	
Output power, lowest setting		−30		dBm	Output power is programmable, and full range is available in all frequency bands Delivered to a 50-Ω single-ended load through the RF matching network in SWRR046 and SWRR045
Harmonics, radiated					Measured on SWRR046 and SWRR045 with CW, maximum output power The antennas used during the radiated measurements (SMAFF-433 from R.W. Badland and Nearson S331 868/915) play a part in attenuating the harmonics Note: All harmonics are below −41.2 dBm when operating in the 902 - 928 MHz band
2nd Harm, 433 MHz		−49		dBm	
3rd Harm, 433 MHz		−40		dBm	
2nd Harm, 868 MHz		−47		dBm	
3rd Harm, 868 MHz		−55		dBm	
2nd Harm, 915 MHz		−50		dBm	
3rd Harm, 915 MHz		−54		dBm	
Harmonics, conducted					Measured with +10 dBm CW at 315 MHz and 433 MHz
315 MHz		< −35		dBm	Frequencies below 960 MHz
		< −53		dBm	Frequencies above 960 MHz
433 MHz		−43		dBm	Frequencies below 1 GHz
		< −45		dBm	Frequencies above 1 GHz
868 MHz 2nd Harm other harmonics		−36		dBm	Measured with +12 dBm CW at 868 MHz
		< −46		dBm	
915 MHz 2nd Harm other harmonics		−34		dBm	Measured with +11 dBm CW at 915 MHz (requirement is −20 dBc under FCC 15.247)
Other harmonics		< −50		dBm	
Spurious emissions conducted, harmonics not included					Measured with +10 dBm CW at 315 MHz and 433 MHz
315 MHz		< −58			Frequencies below 960 MHz
		< −53			Frequencies above 960 MHz
433 MHz		< −50			Frequencies below 1 GHz
		< −54			Frequencies above 1 GHz
		< −56			Frequencies within 47-74, 87.5-118, 174-230, 470-862 MHz
					Measured with +12 dBm CW at 868 MHz
868 MHz		< −50			Frequencies below 1 GHz
		< −52			Frequencies above 1 GHz
		< −53			Frequencies within 47-74, 87.5-118, 174-230, 470-862 MHz

Copyright © 2011–2014, Texas Instruments Incorporated

T_A = 25°C, VDD = 3.0 V, +10 dBm if nothing else stated. All measurement results are obtained using SWRR046 and SWRR045.

Parameter	Min	Typ	Max	Unit	Condition
					All radiated spurious emissions are within the limits of ETSI. The peak conducted spurious emission is −53 dBm at 699 MHz (868 MHz - 169 MHz), which is in a frequency band limited to −54 dBm by EN 300 220 V2.3.1. An alternative filter can be used to reduce the emission at 699 MHz below −54 dBm, for conducted measurements, and is shown in Figure 6-2. See more information in DN017 SWRA168. For compliance with modulation bandwidth requirements under EN 300 220 V2.3.1 in the 863 to 870 MHz frequency range it is recommended to use a 26 MHz crystal for frequencies below 869 MHz and a 27 MHz crystal for frequencies above 869 MHz.
915 MHz		< −51 < −54			Measured with +11 dBm CW at 915 MHz Frequencies below 960 MHz Frequencies above 960 MHz
TX latency		8		bit	Serial operation. Time from sampling the data on the transmitter data input pin until it is observed on the RF output ports.

4.6.1 Typical Variation in Output Power over Temperature and Supply Voltage, 868 MHz

	Supply Voltage VDD = 1.8 V			Supply Voltage VDD = 3.0 V			Supply Voltage VDD = 3.6 V		
Temperature [°C]	−40	25	85	−40	25	85	−40	25	85
Output Power [dBm], PATABLE=0xC0, +12 dBm	12	11	10	12	12	11	12	12	11
Output Power [dBm], PATABLE=0xC5, +10 dBm	11	10	9	11	10	10	11	10	10
Output Power [dBm], PATABLE=0x50, 0 dBm	1	0	-1	2	1	0	2	1	0

4.6.2 Typical Variation in Output Power over Temperature and Supply Voltage, 915 MHz

	Supply Voltage VDD = 1.8 V			Supply Voltage VDD = 3.0 V			Supply Voltage VDD = 3.6 V		
Temperature [°C]	−40	25	85	−40	25	85	−40	25	85
Output Power [dBm], PATABLE=0xC0, +11 dBm	11	10	10	12	11	11	12	11	11
Output Power [dBm], PATABLE=0x8E, +0 dBm	2	1	0	2	1	0	2	1	0

Copyright © 2011–2014, Texas Instruments Incorporated

4.7 Crystal Oscillator

T_A = 25°C, VDD = 3.0 V if nothing else is stated. All measurement results obtained using SWRR046 and SWRR045.

Parameter	Min	Typ	Max	Unit	Condition
Crystal frequency	26	26	27	MHz	For compliance with modulation bandwidth requirements under EN 300 220 V2.3.1 in the 863 to 870 MHz frequency range it is recommended to use a 26 MHz crystal for frequencies below 869 MHz and a 27 MHz crystal for frequencies above 869 MHz.
Tolerance		±40		ppm	This is the total tolerance including a) initial tolerance, b) crystal loading, c) aging, and d) temperature dependence. The acceptable crystal tolerance depends on RF frequency and channel spacing / bandwidth.
Load capacitance	10	13	20	pF	Simulated over operating conditions
ESR			100	Ω	
Start-up time		150		µs	This parameter is to a large degree crystal dependent. Measured on SWRR046 and SWRR045 using crystal AT-41CD2 from NDK

4.8 Frequency Synthesizer Characteristics

T_A = 25°C, VDD = 3.0 V if nothing else is stated. All measurement results are obtained using SWRR046 and SWRR045. Minimum figures are given using a 27 MHz crystal. Typical and maximum figures are given using a 26 MHz crystal.

Parameter	Min	Typ	Max	Unit	Condition
Programmed frequency resolution	397	$F_{XOSC}/2^{16}$	412	Hz	26- to 27-MHz crystal. The resolution (in Hz) is equal for all frequency bands
Synthesizer frequency tolerance		±40		ppm	Given by crystal used. Required accuracy (including temperature and aging) depends on frequency band and channel bandwidth / spacing
RF carrier phase noise		–92		dBc/Hz	at 50 kHz offset from carrier
RF carrier phase noise		–92		dBc/Hz	at 100 kHz offset from carrier
RF carrier phase noise		–92		dBc/Hz	at 200 kHz offset from carrier
RF carrier phase noise		–98		dBc/Hz	at 500 kHz offset from carrier
RF carrier phase noise		–107		dBc/Hz	at 1 MHz offset from carrier
RF carrier phase noise		–113		dBc/Hz	at 2 MHz offset from carrier
RF carrier phase noise		–119		dBc/Hz	at 5 MHz offset from carrier
RF carrier phase noise		–129		dBc/Hz	at 10 MHz offset from carrier
PLL turn-on or hop time (See Table 5-5)	72	75	75	µs	Time from leaving the IDLE state until arriving in the FSTXON or TX state, when not performing calibration. Crystal oscillator running.
PLL calibration time (See Table 5-6)	685	712	724	µs	Calibration can be initiated manually or automatically before entering or after leaving TX

4.9 DC Characteristics

T_A = 25°C if nothing else stated.

Digital Inputs/Outputs	Min	Max	Unit	Condition
Logic "0" input voltage	0	0.7	V	
Logic "1" input voltage	VDD – 0.7	VDD	V	
Logic "0" output voltage	0	0.5	V	For up to 4 mA output current
Logic "1" output voltage	VDD – 0.3	VDD	V	For up to 4 mA output current
Logic "0" input current	N/A	–50	nA	Input equals 0 V
Logic "1" input current	N/A	50	nA	Input equals VDD

Copyright © 2011–2014, Texas Instruments Incorporated

4.10 Power-On Reset

For proper Power-On-Reset functionality the power supply should comply with the requirements in Section 4.10. Otherwise, the chip should be assumed to have unknown state until transmitting an SRES strobe over the SPI interface. See Section 5.10.1, *Power-On Start-Up Sequence*, for further details.

Parameter	Min	Typ	Max	Unit	Condition
Power-up ramp-up time			5	ms	From 0 V until reaching 1.8 V
Power off time	1			ms	Minimum time between power-on and power-off

4.11 Thermal Characteristics

NAME	DESCRIPTION	QFN (°C/W)
$R_{\theta JA}$	Junction-to-ambient thermal resistance	47
$R_{\theta JC(top)}$	Junction-to-case (top) thermal resistance	45
$R_{\theta JB}$	Junction-to-board thermal resistance	13.6
$R_{\theta JC(bot)}$	Junction-to-case (bottom) thermal resistance	5.12

Copyright © 2011–2014, Texas Instruments Incorporated

5 Detailed Description

5.1 Overview

The CC115L transmitter is based on direct synthesis of the RF frequency. The frequency synthesizer includes a completely on-chip LC VCO.

A crystal is to be connected to XOSC_Q1 and XOSC_Q2. The crystal oscillator generates the reference frequency for the synthesizer, as well as clocks for the ADC and the digital part.

A 4-wire SPI is used for configuration and data buffer access.

The digital baseband includes support for channel configuration, packet handling, and data buffering.

5.2 Functional Block Diagram

A simplified block diagram of CC115L is shown in Figure 5-1.

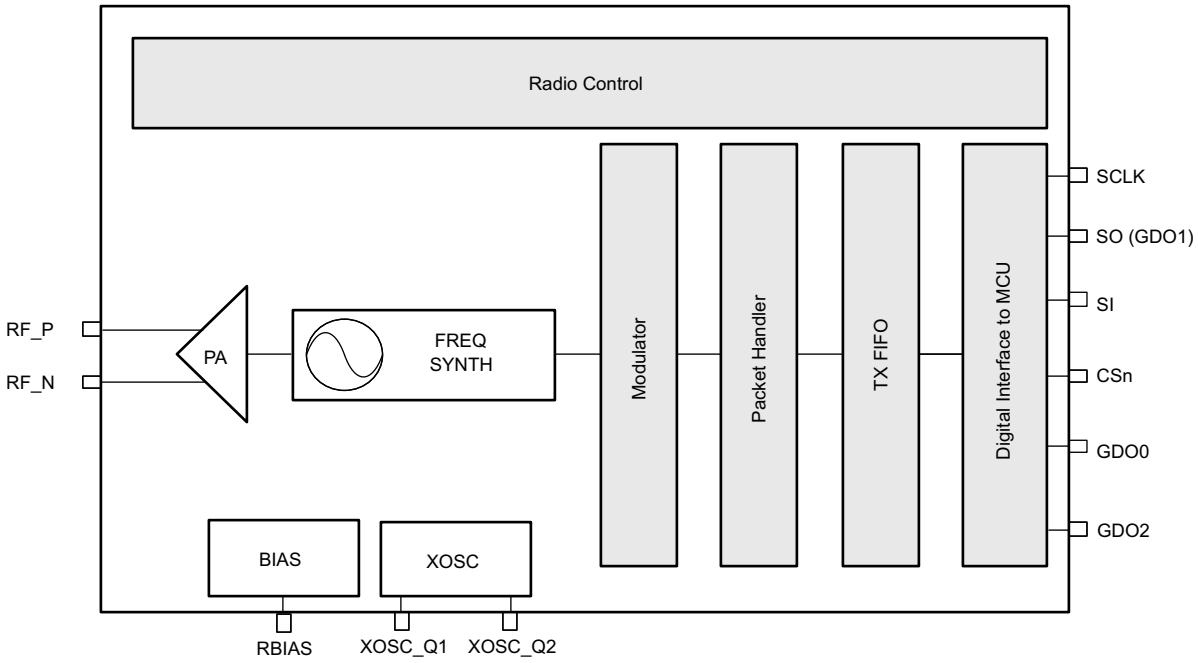

Figure 5-1. CC115L Simplified Block Diagram

5.3 Configuration Overview

CC115L can be configured to achieve optimum performance for many different applications. Configuration is done using the SPI interface. See Section 5.5 for more description of the SPI interface. The following key parameters can be programmed:

- Power-down / power up mode
- Crystal oscillator power-up / power-down
- Carrier frequency / RF channel
- Transmit mode
- Data rate
- Modulation format
- RF output power
- Data buffering with separate 64-byte TX FIFO
- Packet radio hardware support

Details of each configuration register can be found in Section 5.19.

Figure 5-2 shows a simplified state diagram that explains the main CC115L states together with typical usage and current consumption. For detailed information on controlling the CC115L state machine, and a complete state diagram, see Section 5.10.

Copyright © 2011–2014, Texas Instruments Incorporated

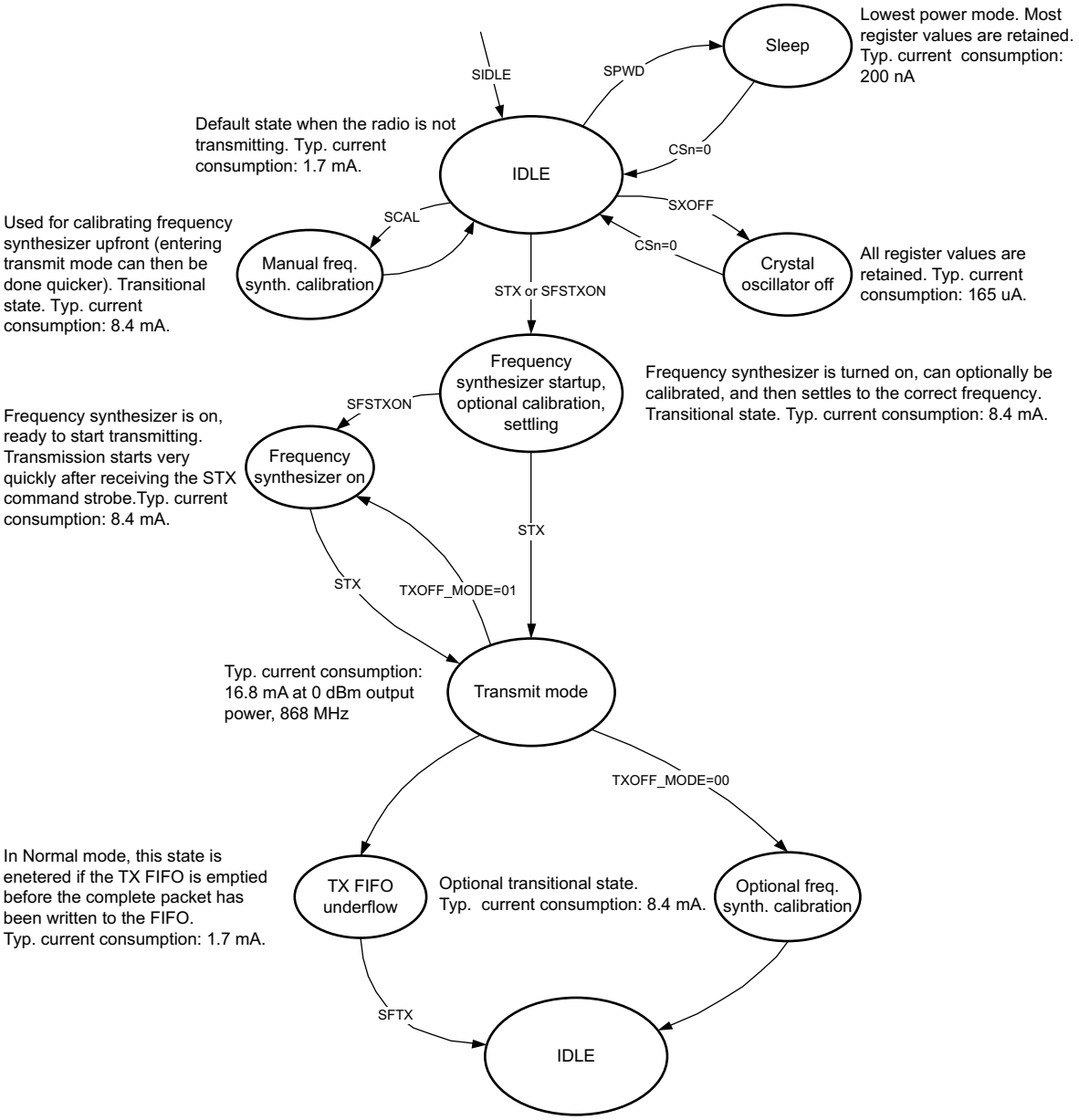

Figure 5-2. Simplified Radio Control State Diagram with Typical Current Consumption

5.4 Configuration Software

CC115L can be configured using the SmartRF™ Studio software SWRC176. The SmartRF Studio software is highly recommended for obtaining optimum register settings, and for evaluating performance and functionality.

After chip reset, all the registers have default values as shown Section 5.19. The optimum register setting might differ from the default value. After a reset all registers that shall be different from the default value therefore needs to be programmed through the SPI interface.

Copyright © 2011–2014, Texas Instruments Incorporated

5.5 4-wire Serial Configuration and Data Interface

CC115L is configured through a simple 4-wire SPI-compatible interface (SI, SO, SCLK and CSn) where CC115L is the slave. This interface is also used write buffered data. All transfers on the SPI interface are done most significant bit first.

All transactions on the SPI interface start with a header byte containing a R/$\overline{W}$ bit, a burst access bit (B), and a 6-bit address (A_5–A_0).

The CSn pin must be kept low during transfers on the SPI bus. If CSn goes high during the transfer of a header byte or during read/write from/to a register, the transfer will be cancelled. The timing for the address and data transfer on the SPI interface is shown in Figure 5-3 with reference to Table 5-1.

When CSn is pulled low, the MCU must wait until CC115L SO pin goes low before starting to transfer the header byte. This indicates that the crystal is running. Unless the chip was in the SLEEP or XOFF states, the SO pin will always go low immediately after taking CSn low.

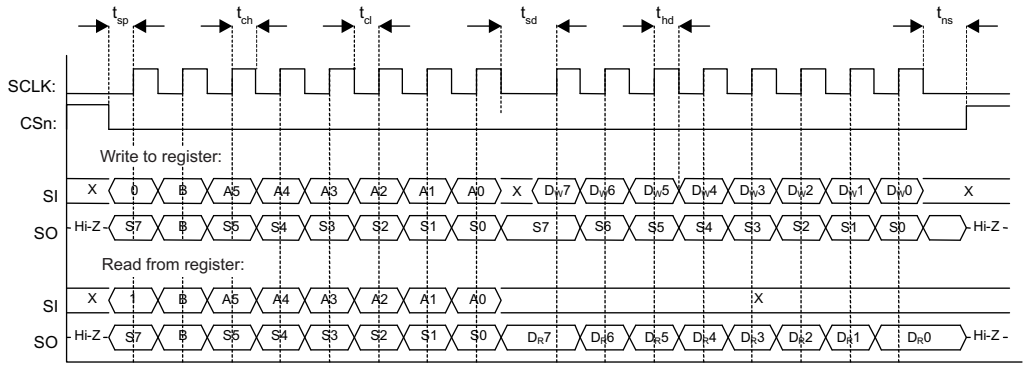

Figure 5-3. Configuration Registers Write and Read Operations

Table 5-1. SPI Interface Timing Requirements

Parameter	Description		Min	Max	Units
f_{SCLK}	SCLK frequency 100 ns delay inserted between address byte and data byte (single access), or between address and data, and between each data byte (burst access).		–	10	MHz
	SCLK frequency, single access No delay between address and data byte		–	9	
	SCLK frequency, burst access No delay between address and data byte, or between data bytes		–	6.5	
$t_{sp,pd}$	CSn low to positive edge on SCLK, in power-down mode		150	–	µs
t_{sp}	CSn low to positive edge on SCLK, in active mode		20	–	ns
t_{ch}	Clock high		50	–	ns
t_{cl}	Clock low		50	–	ns
t_{rise}	Clock rise time		–	40	ns
t_{fall}	Clock fall time		–	40	ns
t_{sd}	Setup data (negative SCLK edge) to positive edge on SCLK (tsd applies between address and data bytes, and between data bytes)	Single access	55	–	ns
		Burst access	76	–	
t_{hd}	Hold data after positive edge on SCLK		20	–	ns
t_{ns}	Negative edge on SCLK to CSn high.		20	–	ns

Copyright © 2011–2014, Texas Instruments Incorporated

NOTE

The minimum $t_{sp,pd}$ figure in Table 5-1 can be used in cases where the user does not read the CHIP_RDYn signal. CSn low to positive edge on SCLK when the chip is woken from power-down depends on the start-up time of the crystal being used. The 150 µs in Table 5-1 is the crystal oscillator start-up time measured on SWRR046 and SWRR045 using crystal AT-41CD2 from NDK.

5.5.1 Chip Status Byte

When the header byte, data byte, or command strobe is sent on the SPI interface, the chip status byte is sent by the CC115L on the SO pin. The status byte contains key status signals, useful for the MCU. The first bit, s7, is the CHIP_RDYn signal and this signal must go low before the first positive edge of SCLK. The CHIP_RDYn signal indicates that the crystal is running.

Bits 6, 5, and 4 comprise the STATE value. This value reflects the state of the chip. The XOSC and power to the digital core are on in the IDLE state, but all other modules are in power down. The frequency and channel configuration should only be updated when the chip is in this state.

The last four bits (3:0) in the status byte contains FIFO_BYTES_AVAILABLE. For these bits to give any valid information, the R/$\overline{W}$ bit in the header byte must be set to 0. The FIFO_BYTES_AVAILABLE field contains the number of bytes that can be written to the TX FIFO. When FIFO_BYTES_AVAILABLE=15, 15 or more bytes can be written.

Table 5-2 gives a status byte summary.

Table 5-2. Status Byte Summary

Bits	Name	Description		
7	CHIP_RDYn	Stays high until power and crystal have stabilized. Should always be low when using the SPI interface.		
6:4	STATE[2:0]	Indicates the current main state machine mode		
		Value	State	Description
		000	IDLE	IDLE state (Also reported for some transitional states instead of SETTLING or CALIBRATE)
		001	Reserved	
		010	TX	Transmit mode
		011	FSTXON	Fast TX ready
		100	CALIBRATE	Frequency synthesizer calibration is running
		101	SETTLING	PLL is settling
		110	Reserved	
		111	TXFIFO_UNDERFLOW	TX FIFO has underflowed. Acknowledge with SFTX
3:0	FIFO_BYTES_AVAILABLE[3:0]	The number of bytes that can be written to the TX FIFO		

Copyright © 2011–2014, Texas Instruments Incorporated

5.5.2 Register Access

The configuration registers on the CC115L are located on SPI addresses from 0x00 to 0x2E. Table 5-14 lists all configuration registers. It is highly recommended to use SmartRF Studio SWRC176 to generate optimum register settings. The detailed description of each register is found in Section 5.19.1 and Section 5.19.2. All configuration registers can be both written to and read. The R/$\overline{W}$ bit controls if the register should be written to or read. When writing to registers, the status byte is sent on the SO pin each time a header byte or data byte is transmitted on the SI pin. When reading from registers, the status byte is sent on the SO pin each time a header byte is transmitted on the SI pin.

Registers with consecutive addresses can be accessed in an efficient way by setting the burst bit (B) in the header byte. The address bits (A_5 - A_0) set the start address in an internal address counter. This counter is incremented by one each new byte (every 8 clock pulses). The burst access is either a read or a write access and must be terminated by setting CSn high.

For register addresses in the range 0x30 - 0x3D, the burst bit is used to select between status registers when burst bit is one, and between command strobes when burst bit is zero (see Section 5.5.3). Because of this, burst access is not available for status registers and they must be accessed one at a time. The status registers can only be read.

5.5.3 SPI Read

When reading register fields over the SPI interface while the register fields are updated by the radio hardware (that is, MARCSTATE or TXBYTES), there is a small, but finite, probability that a single read from the register is being corrupt. As an example, the probability of any single read from TXBYTES being corrupt, assuming the maximum data rate is used, is approximately 80 ppm. Refer to the CC115L Errata Notes SWRZ037 for more details.

5.5.4 Command Strobes

Command Strobes may be viewed as single byte instructions to CC115L. By addressing a command strobe register, internal sequences will be started. These commands are used to disable the crystal oscillator, enable transmit mode, enable calibration etc. The 11 command strobes are listed in Table 5-13.

NOTE

An SIDLE strobe will clear all pending command strobes until IDLE state is reached. This means that if for example an SIDLE strobe is issued while the radio is in TX state, any other command strobes issued before the radio reaches IDLE state will be ignored.

The command strobe registers are accessed by transferring a single header byte (no data is being transferred). That is, only the R/$\overline{W}$ bit, the burst access bit (set to 0), and the six address bits (in the range 0x30 through 0x3D) are written. The R/$\overline{W}$ bit should be set to zero if the FIFO_BYTES_AVAILABLE field in the status byte should be interpreted.

When writing command strobes, the status byte is sent on the SO pin.

A command strobe may be followed by any other SPI access without pulling CSn high. However, if an SRES strobe is being issued, one will have to wait for SO to go low again before the next header byte can be issued as shown in Figure 5-4. The command strobes are executed immediately, with the exception of the SPWD and the SXOFF strobes, which are executed when CSn goes high.

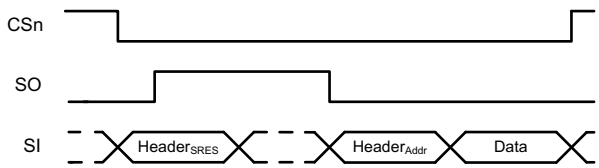

Figure 5-4. SRES Command Strobe

Copyright © 2011–2014, Texas Instruments Incorporated

5.5.5 TX FIFO Access

The 64-byte TX FIFO is accessed through the 0x3F address. The TX FIFO is write-only and the R/$\overline{W}$ bit should therefore be zero.

The burst bit is used to determine if the TX FIFO access is a single byte access or a burst access. The single byte access method expects a header byte with the burst bit set to zero and one data byte. After the data byte, a new header byte is expected; hence CSn can remain low. The burst access method expects one header byte and then consecutive data bytes until terminating the access by setting CSn high.

The following header bytes access the FIFO:

- 0x3F: Single byte access to TX FIFO
- 0x7F: Burst access to TX FIFO

When writing to the TX FIFO, the status byte (see Section 5.5.1) is output on SO for each new data byte as shown in Figure 5-3. This status byte can be used to detect TX FIFO underflow while writing data to the TX FIFO. Note that the status byte contains the number of bytes free before writing the byte in progress to the TX FIFO. When the last byte that fits in the TX FIFO is transmitted on SI, the status byte received concurrently on SO will indicate that one byte is free in the TX FIFO.

The TX FIFO may be flushed by issuing a SFTX command strobe. A SFTX command strobe can only be issued in the IDLE, or TXFIFO_UNDERFLOW states. The TX FIFO is flushed when going to the SLEEP state.

Figure 5-5 gives a brief overview of different register access types possible.

5.5.6 PATABLE Access

The 0x3E address is used to access the PATABLE, which is used for selecting PA power control settings. The SPI expects one or two data bytes after receiving the address (the burst bit must be set if two bytes are to be written). For OOK, two bytes should be written to PATABLE; the first byte after the address will set the logic 0 power level and the second byte written will set the logic 1 power level. For all other modulations formats, only one byte should be written to PATABLE. Use SmartRF Studio SWRC176 or DN013 SWRA168 for recommended register values for a given output power.

The PATABLE can also be read by setting the R/$\overline{W}$ bit to 1. The read operation can be done as a single byte or burst access, depending on how many bytes should be read (one or two). Note that pulling CSn high will reset the index counter to zero, meaning that burst access needs to be used for reading/writing the second PATABLE entry. For the same reason, if one byte is written to the PATABLE and this value is to be read out, CSn must be set high before the read access in order to set the index counter back to zero.

The content of the PATABLE is lost when entering the SLEEP state, except for the first byte, meaning that if OOK is used, the PATABLE needs to be reprogrammed when waking up from SLEEP.

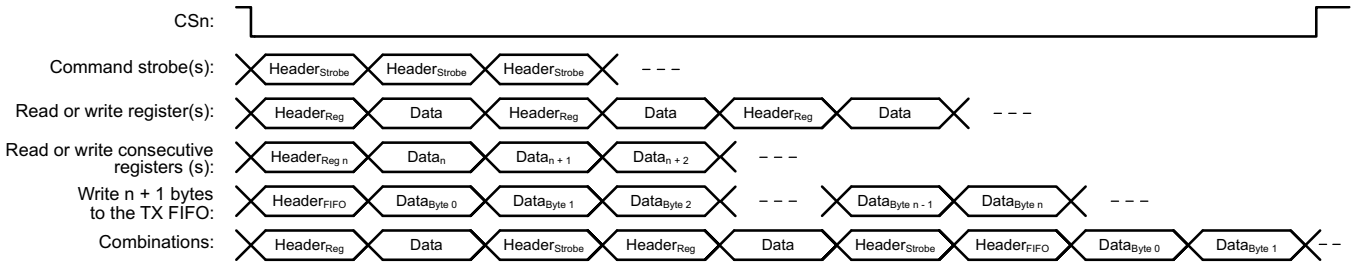

Figure 5-5. Register Access Types

Copyright © 2011–2014, Texas Instruments Incorporated

5.6 Microcontroller Interface and Pin Configuration

In a typical system, CC115L will interface to a microcontroller. This microcontroller must be able to:

- Program CC115L into different modes
- Write buffered data
- Read back status information through the 4-wire SPI-bus configuration interface (SI, SO, SCLK, and CSn)

5.6.1 Configuration Interface

The microcontroller uses four I/O pins for the SPI configuration interface (SI, SO, SCLK, and CSn). The SPI is described in Section 5.5.

5.6.2 General Control and Status Pins

The CC115L has two dedicated configurable pins (GDO0 and GDO2) and one shared pin (GDO1) that can output internal status information useful for control software. These pins can be used to generate interrupts on the MCU. See Section 5.16 for more details on the signals that can be programmed.

GDO1 is shared with the SO pin in the SPI interface. The default setting for GDO1/SO is 3-state output. By selecting any other of the programming options, the GDO1/SO pin will become a generic pin. When CSn is low, the pin will always function as a normal SO pin.

In the synchronous and asynchronous serial modes, the GDO0 pin is used as a serial TX data input pin while in transmit mode.

Copyright © 2011–2014, Texas Instruments Incorporated

5.7 Data Rate Programming

The data rate used when transmitting is programmed by the MDMCFG3.DRATE_M and the MDMCFG4.DRATE_E configuration registers. The data rate is given by the formula below. As the formula shows, the programmed data rate depends on the crystal frequency.

$$R_{DATA} = \frac{(256 + DRATE_M) \cdot 2^{DRATE_E}}{2^{28}} \cdot f_{XOSC} \quad (1)$$

The following approach can be used to find suitable values for a given data rate:

$$DRATE_E = \log_2\left(\frac{R_{DATA} \cdot 2^{20}}{f_{XOSC}}\right) \quad (2)$$

$$DRATE_M = \frac{R_{DATA} \cdot 2^{28}}{f_{XOSC} \cdot 2^{DRATE_E}} - 256 \quad (3)$$

If DRATE_M is rounded to the nearest integer and becomes 256, increment DRATE_E and use DRATE_M = 0.

The data rate can be set from 0.6 kBaud to 500 kBaud with the minimum step size according to Table 5-3. See Section 4.4 for the minimum and maximum data rates for the different modulation formats.

Table 5-3. Data Rate Step Size (Assuming a 26-MHz Crystal)

Min Data Rate [kBaud]	Typical Data Rate [kBaud]	Max Data Rate [kBaud]	Data rate Step Size [kBaud]
0.6	1.0	0.79	0.0015
0.79	1.2	1.58	0.0031
1.59	2.4	3.17	0.0062
3.17	4.8	6.33	0.0124
6.35	9.6	12.7	0.0248
12.7	19.6	25.3	0.0496
25.4	38.4	50.7	0.0992
50.8	76.8	101.4	0.1984
101.6	153.6	202.8	0.3967
203.1	250	405.5	0.7935
406.3	500	500	1.5869

Copyright © 2011–2014, Texas Instruments Incorporated

5.8 Packet Handling Hardware Support

The CC115L has built-in hardware support for packet oriented radio protocols. The packet handler can be configured to add the following elements to the packet stored in the TX FIFO:

- A programmable number of preamble bytes
- A two byte synchronization (sync) word. Can be duplicated to give a 4-byte sync word. It is not possible to only insert preamble or only insert a sync word
- A CRC checksum computed over the data field.
- In a system where the CC115L is transmitting packets to the CC110L, CC113L or CC1101, the recommended setting is 4- byte preamble and 4-byte sync word, except for 500 kBaud data rate where the recommended preamble length is 8 bytes.

NOTE

Register fields that control the packet handling features should only be altered when CC115L is in the IDLE state.

5.8.1 Packet Format

The format of the data packet can be configured and consists of the following items (see Figure 5-6):

- Preamble
- Synchronization word
- Optional length byte
- Optional address byte
- Payload
- Optional 2 byte CRC

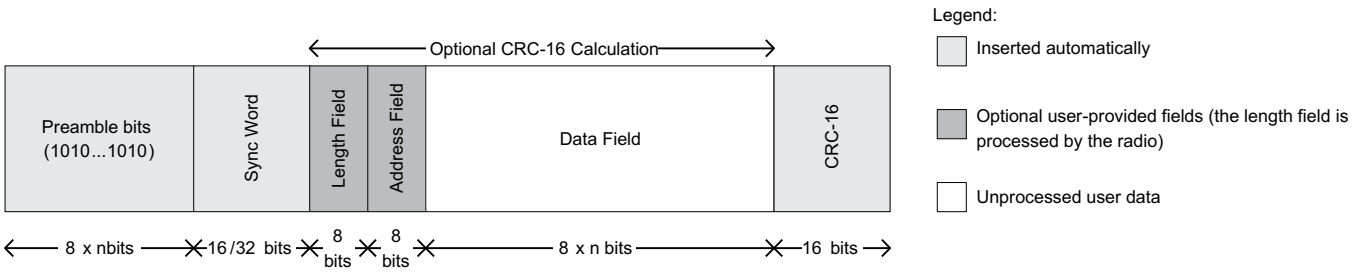

Figure 5-6. Packet Format

The preamble pattern is an alternating sequence of ones and zeros (10101010…). The minimum length of the preamble is programmable through the value of MDMCFG1.NUM_PREAMBLE. When enabling TX, the modulator will start transmitting the preamble. When the programmed number of preamble bytes has been transmitted, the modulator will send the sync word and then data from the TX FIFO if data is available. If the TX FIFO is empty, the modulator will continue to send preamble bytes until the first byte is written to the TX FIFO. The modulator will then send the sync word and then the data bytes.

The synchronization word is a two-byte value set in the SYNC1 and SYNC0 registers. If the CC110L, CC113L, or CC1101 are used at the receiving end, they will need the sync word for byte synchronization of the incoming packet. The synchronization word is automatically inserted by the CC115L. A one-byte sync word can be emulated by setting the SYNC1 value to the preamble pattern. It is also possible to emulate a 32 bit sync word by setting MDMCFG2.SYNC_MODE to 3. The sync word will then be repeated twice.

CC115L supports both constant packet length protocols and variable length protocols. Variable or fixed packet length mode can be used for packets up to 255 bytes. For longer packets, infinite packet length mode must be used.

Copyright © 2011–2014, Texas Instruments Incorporated

Fixed packet length mode is selected by setting PKTCTRL0.LENGTH_CONFIG=0. The desired packet length is set by the PKTLEN register. This value must be different from 0.

In variable packet length mode, PKTCTRL0.LENGTH_CONFIG=1, the packet length is configured by the first byte transmitted after the sync word. The packet length is defined as the payload data, excluding the length byte and the optional CRC. The PKTLEN value must be different from 0.

With PKTCTRL0.LENGTH_CONFIG=2, the packet length is set to infinite and transmission will continue until turned off manually. As described in , this can be used to support packet formats with different length configuration than natively supported by CC115L. One should make sure that TX mode is not turned off during the transmission of the first half of any byte. Refer to the CC115L Errata Notes SWRZ036 for more details.

NOTE

The minimum packet length supported (excluding the optional length byte and CRC) is one byte of payload data.

5.8.1.1 Packet Length > 255

The packet automation control register, PKTCTRL0, can be reprogrammed during TX. This opens the possibility to transmit packets that are longer than 256 bytes and still be able to use the packet handling hardware support. At the start of the packet, the infinite packet length mode (PKTCTRL0.LENGTH_CONFIG=2) must be active and the PKTLEN register is set to mod(length, 256). When less than 256 bytes remains of the packet, the MCU disables infinite packet length mode and activates fixed packet length mode (PKTCTRL0.LENGTH_CONFIG=0). When the internal byte counter reaches the PKTLEN value, the transmission ends (the radio enters the state determined by TXOFF_MODE). Automatic CRC appending/checking can also be used (by setting PKTCTRL0.CRC_EN=1).

When for example a 600-byte packet is to be transmitted, the MCU should do the following (see Figure 5-7).

- Set PKTCTRL0.LENGTH_CONFIG=2.
- Pre-program the PKTLEN register to mod(600, 256) = 88.
- Transmit at least 345 bytes (600 - 255), for example by filling the 64-byte TX FIFO six times (384 bytes transmitted).
- Set PKTCTRL0.LENGTH_CONFIG=0.
- The transmission ends when the packet counter reaches 88. A total of 600 bytes are transmitted.

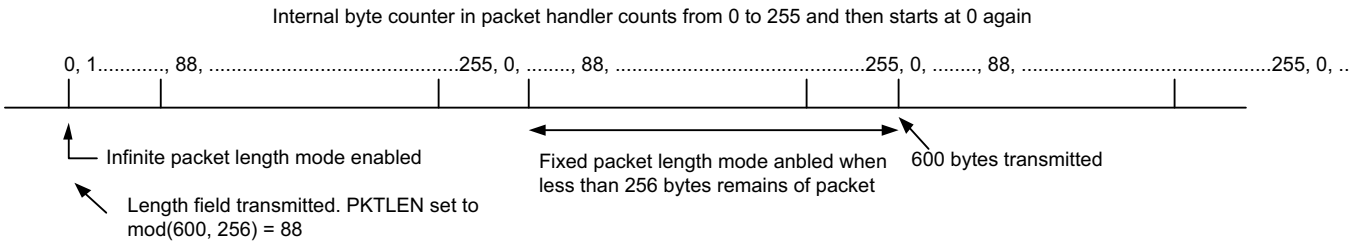

Figure 5-7. Packet Length > 255

Copyright © 2011–2014, Texas Instruments Incorporated

5.8.2 Packet Handling

The payload that is to be transmitted must be written into the TX FIFO. The first byte written must be the length byte when variable packet length is enabled. The length byte has a value equal to the payload of the packet (including the optional address byte). If the receiver is the CC110L, CC113L, or CC1101, and address recognition is enabled, the second byte written to the TX FIFO must be the address byte.

If fixed packet length is enabled, the first byte written to the TX FIFO should be the address (assuming the receiver uses address recognition).

The modulator will first send the programmed number of preamble bytes. If data is available in the TX FIFO, the modulator will send the two-byte (optionally 4-byte) sync word followed by the payload in the TX FIFO. If CRC is enabled, the checksum is calculated over all the data pulled from the TX FIFO, and the result is sent as two extra bytes following the payload data. If the TX FIFO runs empty before the complete packet has been transmitted, the radio will enter TXFIFO_UNDERFLOW state. The only way to exit this state is by issuing an SFTX strobe. Writing to the TX FIFO after it has underflowed will not restart TX mode.

5.8.3 Packet Handling in Firmware

When implementing a packet oriented radio protocol in firmware, the MCU needs to know when a packet has been transmitted. Additionally, for packets longer than 64 bytes, the TX FIFO needs to be refilled while in TX. This means that the MCU needs to know the number of bytes that can be written to the TX FIFO. There are two possible solutions to get the necessary status information:

a. Interrupt Driven Solution

The GDO pins can be used to give an interrupt when a sync word has been transmitted or when a complete packet has been transmitted by setting IOCFGx.GDOx_CFG=0x06. In addition, there are two configurations for the IOCFGx.GDOx_CFG register that can be used as an interrupt source to provide information on how many bytes that are in the TX FIFO (IOCFGx.GDOx_CFG=0x02 and IOCFGx.GDOx_CFG=0x03). See Table 5-12 for more information.

b. SPI Polling

The PKTSTATUS register can be polled at a given rate to get information about the current GDO2 and GDO0 values respectively. The TXBYTES registers can be polled at a given rate to get information about the number of bytes in the and TX FIFO. Alternatively, the number of bytes in the TX FIFO can be read from the chip status byte returned on the MISO line each time a header byte, data byte, or command strobe is sent on the SPI bus.

It is recommended to employ an interrupt driven solution due to a small, but finite, probability that a single read from registers PKTSTATUS and TXBYTES is being corrupt. The same is the case when reading the chip status byte (see Section 5.5.3 and the CC115L Errata Notes SWRZ036).

Copyright © 2011–2014, Texas Instruments Incorporated

5.9 Modulation Formats

CC115L supports amplitude, frequency, and phase shift modulation formats. The desired modulation format is set in the MDMCFG2.MOD_FORMAT register.

Optionally, the data stream can be Manchester coded by the modulator by setting MDMCFG2.MANCHESTER_EN=1.

NOTE

Manchester encoding is not supported at the same time as using 4-FSK modulation.

5.9.1 Frequency Shift Keying

CC115L supports 2-(G)FSK and 4-FSK modulation. When selecting 4-FSK, the preamble and sync word is sent using 2-FSK (see Figure 5-8).

The frequency deviation is programmed with the DEVIATION_M and DEVIATION_E values in the DEVIATN register. The value has an exponent/mantissa form, and the resultant deviation is given by:

$$f_{dev} = \frac{f_{XOSC}}{2^{17}} \cdot (8 + \text{DEVIATION_M}) \cdot 2^{\text{DEVIATION_E}} \quad (4)$$

The symbol encoding is shown in Table 5-4.

Table 5-4. Symbol Encoding for 2-FSK/GFSK and 4-FSK Modulation

Format	Symbol	Coding
2-FSK/GFSK	0	– Deviation
	1	+ Deviation
4-FSK	01	– Deviation
	00	– 1/3×Deviation
	10	+ 1/3×Deviation
	11	+ Deviation

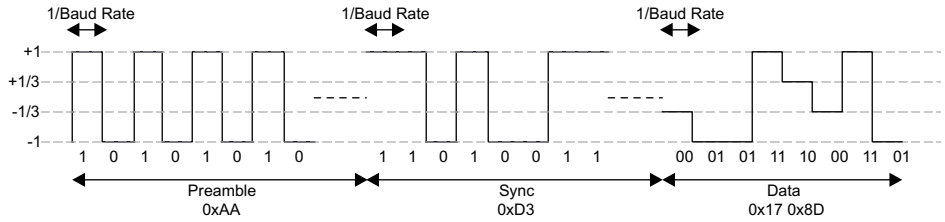

Figure 5-8. Data Sent Over the Air (MDMCFG2.MOD_FORMAT=100)

5.9.2 Amplitude Modulation

The amplitude modulation supported by CC115L is On-Off Keying (OOK). OOK modulation simply turns the PA on or off to modulate ones and zeros respectively.

The DEVIATN register setting has no effect when using OOK.

Copyright © 2011–2014, Texas Instruments Incorporated

5.10 Radio Control

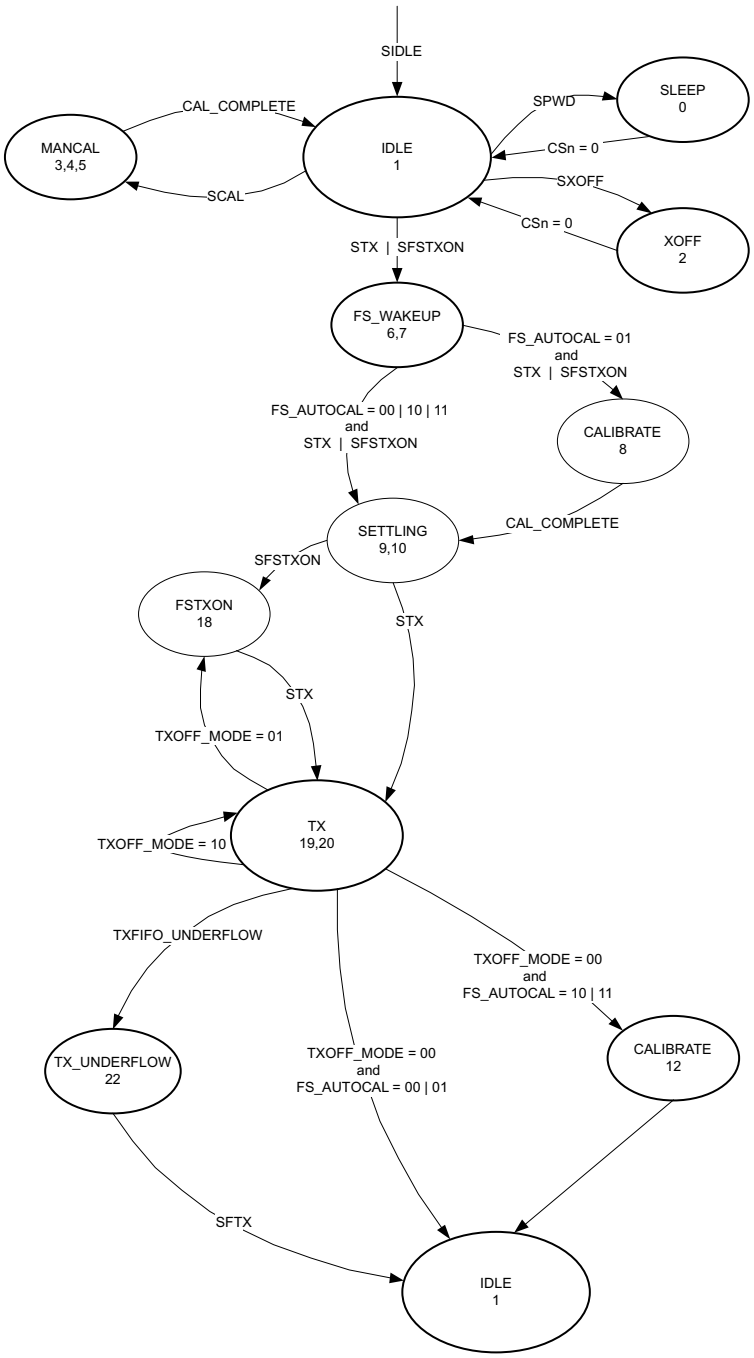

Figure 5-9. Complete Radio Control State Diagram

CC115L has a built-in state machine that is used to switch between different operational states (modes). The change of state is done either by using command strobes or by internal events such as TX FIFO underflow.

A simplified state diagram, together with typical usage and current consumption, is shown in Figure 5-2. The complete radio control state diagram is shown in Figure 5-9. The numbers refer to the state number readable in the MARCSTATE status register. This register is primarily for test purposes.

Copyright © 2011–2014, Texas Instruments Incorporated

5.10.1 Power-On Start-Up Sequence

When the power supply is turned on, the system must be reset. This is achieved by one of the two sequences described below, that is, automatic power-on reset (POR) or manual reset. After the automatic power-on reset or manual reset, it is also recommended to change the signal that is output on the GDO0 pin. The default setting is to output a clock signal with a frequency of CLK_XOSC/192. However, to optimize performance in TX, an alternative GDO setting from the settings found in Table 5-12 should be selected.

5.10.1.1 Automatic POR

A power-on reset circuit is included in the CC115L. The minimum requirements stated in Section 4.10 must be followed for the power-on reset to function properly. The internal power-up sequence is completed when CHIP_RDYn goes low. CHIP_RDYn is observed on the SO pin after CSn is pulled low. See Section 5.5.1 for more details on CHIP_RDYn.

When the CC115L reset is completed, the chip will be in the IDLE state and the crystal oscillator will be running. If the chip has had sufficient time for the crystal oscillator to stabilize after the power-on-reset, the SO pin will go low immediately after taking CSn low. If CSn is taken low before reset is completed, the SO pin will first go high, indicating that the crystal oscillator is not stabilized, before going low as shown in Figure 5-10.

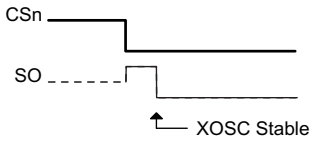

Figure 5-10. Power-On Reset with SRES

5.10.1.2 Manual Reset

The other global reset possibility on CC115L uses the SRES command strobe. By issuing this strobe, all internal registers and states are set to the default, IDLE state. The manual power-up sequence is as follows (see Figure 5-11):

- Set SCLK = 1 and SI = 0.
- Strobe CSn low / high.
- Hold CSn low and then high for at least 40 µs relative to pulling CSn low
- Pull CSn low and wait for SO to go low (CHIP_RDYn).
- Issue the SRES strobe on the SI line.
- When SO goes low again, reset is complete and the chip is in the IDLE state.

XOSC and voltage regulator switched on

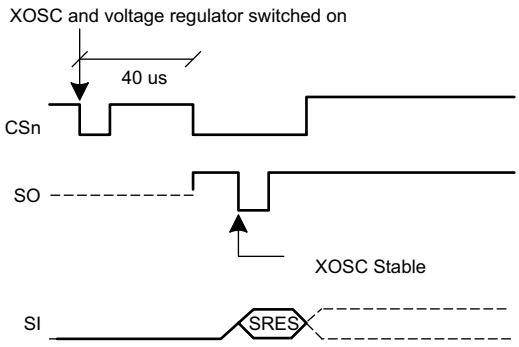

Figure 5-11. Power-On Reset with SRES

Copyright © 2011–2014, Texas Instruments Incorporated

NOTE

The above reset procedure is only required just after the power supply is first turned on. If the user wants to reset the CC115L after this, it is only necessary to issue an SRES command strobe.

5.10.2 Crystal Control

The crystal oscillator (XOSC) is either automatically controlled or always on, if MCSM0.XOSC_FORCE_ON is set.

In the automatic mode, the XOSC will be turned off if the SXOFF or SPWD command strobes are issued; the state machine then goes to XOFF or SLEEP respectively. This can only be done from the IDLE state. The XOSC will be turned off when CSn is released (goes high). The XOSC will be automatically turned on again when CSn goes low. The state machine will then go to the IDLE state. The SO pin on the SPI interface must be pulled low before the SPI interface is ready to be used as described in Section 5.5.1.

If the XOSC is forced on, the crystal will always stay on even in the SLEEP state.

Crystal oscillator start-up time depends on crystal ESR and load capacitances. The electrical specification for the crystal oscillator can be found in Section 4.7.

5.10.3 Voltage Regulator Control

The voltage regulator to the digital core is controlled by the radio controller. When the chip enters the SLEEP state which is the state with the lowest current consumption, the voltage regulator is disabled. This occurs after CSn is released when a SPWD command strobe has been sent on the SPI interface. The chip is then in the SLEEP state. Setting CSn low again will turn on the regulator and crystal oscillator and make the chip enter the IDLE state.

Copyright © 2011–2014, Texas Instruments Incorporated

5.10.4 Transmit Mode (TX)

Transmit mode is activated directly by the MCU by using the STX command strobe.

The frequency synthesizer must be calibrated regularly. CC115L has one manual calibration option (using the SCAL strobe), and three automatic calibration options that are controlled by the MCSM0.FS_AUTOCAL setting:

- Calibrate when going from IDLE to TX (or FSTXON)
- Calibrate when going from TX to IDLE automatically (not forced in IDLE by issuing an SIDLE strobe)
- Calibrate every fourth time when going from TX to IDLE automatically (not forced in IDLE by issuing an SIDLE strobe)

If the radio goes from TX to IDLE by issuing an SIDLE strobe, calibration will not be performed. The calibration takes a constant number of XOSC cycles; see Table 5-5 for timing details regarding calibration.

When TX is active the chip will remain in the TX state until the current packet has been successfully transmitted. Then the state will change as indicated by the MCSM1.TXOFF_MODE setting. The possible destinations are:

- IDLE
- FSTXON: Frequency synthesizer on and ready at the TX frequency. Activate TX with STX
- TX: Start sending preamble

The SIDLE command strobe can always be used to force the radio controller to go to the IDLE state.

5.10.5 Timing

5.10.5.1 Overall State Transition Times

The main radio controller needs to wait in certain states in order to make sure that the internal analog/digital parts have settled down and are ready to operate in the new states. A number of factors are important for the state transition times:

- The crystal oscillator frequency, f_{xosc}
- OOK used or not
- The data rate in cases where OOK is used
- The value of the TEST0, TEST1, and FSCAL3 registers

Table 5-5 shows timing in crystal clock cycles for key state transitions.

Note that the TX to IDLE transition time is a function of data rate ($f_{baudrate}$). When OOK is used (that is, FREND0.PA_POWER=001b), TX to IDLE will require 1/8×f baudrate longer times than the time stated in Table 5-5.

Copyright © 2011–2014, Texas Instruments Incorporated

Table 5-5. Overall State Transition Times [Example for 26-MHz Crystal Oscillator, 250 kBaud Data Rate, and TEST0 = 0x0B (Maximum Calibration Time)].

Description	Transition Time (FREND0.PA_POWER=0)	Transition Time [µs]
IDLE to TX/FSTXON, no calibration	$1954/f_{xosc}$	75.2
IDLE to TX/FSTXON, with calibration	$1953/f_{xosc}$ + FS calibration Time	799
TX to IDLE, no calibration	$\sim 0.25/f_{baudrate}$	~1
TX to IDLE, with calibration	$\sim 0.25/f_{baudrate}$ + FS calibration Time	725
Manual calibration	$283/f_{xosc}$ + FS calibration Time	735

5.10.5.2 Frequency Synthesizer Calibration Time

Table 5-6 summarizes the frequency synthesizer (FS) calibration times for possible settings of TEST0 and FSCAL3.CHP_CURR_CAL_EN. Setting FSCAL3.CHP_CURR_CAL_EN to 00b disables the charge pump calibration stage. TEST0 is set to the values recommended by SmartRF Studio software SWRC176. The possible values for TEST0 when operating with different frequency bands are 0x09 and 0x0B. SmartRF Studio software always sets FSCAL3.CHP_CURR_CAL_EN to 10b.

The calibration time can be reduced from 712/724 µs to 145/157 µs. See Section 5.18.2 for more details.

Table 5-6. Frequency Synthesizer Calibration Times (26- and 27-MHz Crystal)

TEST0	FSCAL3.CHP_CURR_CAL_EN	FS Calibration Time f_{xosc} = 26 MHz	FS Calibration Time f_{xosc} = 27 MHz
0x09	00b	$3764/f_{xosc}$ = 145 µs	$3764/f_{xosc}$ = 139 µs
0x09	10b	$18506/f_{xosc}$ = 712 µs	$18506/f_{xosc}$ = 685 µs
0x0B	00b	$4073/f_{xosc}$ = 157 µs	$4073/f_{xosc}$ = 151 µs
0x0B	10b	$18815/f_{xosc}$ = 724 µs	$18815/f_{xosc}$ = 697 µs

Copyright © 2011–2014, Texas Instruments Incorporated

5.11 TX FIFO

The CC115L contains a 64-byte TX FIFO for data to be transmitted and the SPI interface is used to write to the TX FIFO (see Section 5.5.5 for more details). The FIFO controller will detect underflow in the TX FIFO.

When writing to the TX FIFO it is the responsibility of the MCU to avoid TX FIFO overflow. A TX FIFO overflow will result in an error in the TX FIFO content.

The chip status byte that is available on the SO pin while transferring the SPI header and contains the fill grade of the TX FIFO if the access is a write operation. Section 5.5.1 contains more details on this.

The number of bytes in the TX FIFO can be read from the status registers TXBYTES.NUM_TXBYTES.

The 4-bit FIFOTHR.FIFO_THR setting is used to program threshold points in the TX FIFO.

Table 5-7 lists the 16 FIFO_THR settings and the corresponding thresholds for the TX FIFO.

Table 5-7. FIFO_THR Settings and the Corresponding FIFO Thresholds

FIFO_THR	Bytes in TX FIFO
0 (0000)	61
1 (0001)	57
2 (0010)	53
3 (0011)	49
4 (0100)	45
5 (0101)	41
6 (0110)	37
7 (0111)	33
8 (1000)	29
9 (1001)	25
10 (1010)	21
11 (1011)	17
12 (1100)	13
13 (1101)	9
14 (1110)	5
15 (1111)	1

A signal will assert when the number of bytes in the TX FIFO is equal to or higher than the programmed threshold. This signal can be viewed on the GDO pins (see Table 5-12).

Figure 5-12 shows the number of bytes in the TX FIFO when the threshold signal toggles in the case of FIFO_THR=13. Figure 5-13 shows the signal on the GDO pin as the TX FIFO is filled above the threshold, and then drained below in the case of FIFO_THR=13.

Copyright © 2011–2014, Texas Instruments Incorporated

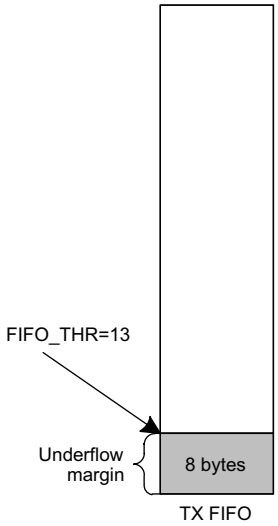

Figure 5-12. Example of FIFO at Threshold

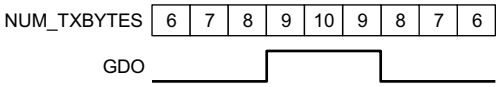

Figure 5-13. Number of Bytes in TX FIFO vs. the GDO Signal (GDOx_CFG=0x02 and FIFO_THR=13)

Copyright © 2011–2014, Texas Instruments Incorporated

5.12 Frequency Programming

The frequency programming in CC115L is designed to minimize the programming needed when changing frequency.

To set up a system with channel numbers, the desired channel spacing is programmed with the MDMCFG0.CHANSPC_M and MDMCFG1.CHANSPC_E registers. The channel spacing registers are mantissa and exponent respectively. The base or start frequency is set by the 24 bit frequency word located in the FREQ2, FREQ1, and FREQ0 registers. This word will typically be set to the center of the lowest channel frequency that is to be used.

The desired channel number is programmed with the 8-bit channel number register, CHANNR.CHAN, which is multiplied by the channel offset. The resultant carrier frequency is given by:

$$f_{carrier} = \frac{f_{XOSC}}{2^{16}} \cdot (FREQ + CHAN \cdot ((256 + CHANSPC_M) \cdot 2^{CHANSPC_2-2})) \quad (5)$$

With a 26 MHz crystal the maximum channel spacing is 405 kHz. To get that is, 1-MHz channel spacing, one solution is to use 333 kHz channel spacing and select each third channel in CHANNR.CHAN.

The preferred IF frequency is programmed with the FSCTRL1.FREQ_IF register. The IF frequency is given by:

$$f_{IF} = \frac{f_{XOSC}}{2^{10}} \cdot FREQ_IF \quad (6)$$

If any frequency programming register is altered when the frequency synthesizer is running, the synthesizer may give an undesired response. Hence, the frequency should only be updated when the radio is in the IDLE state.

Copyright © 2011–2014, Texas Instruments Incorporated

5.13 VCO

The VCO is completely integrated on-chip.

5.13.1 VCO and PLL Self-Calibration

The VCO characteristics vary with temperature and supply voltage changes as well as the desired operating frequency. In order to ensure reliable operation, CC115L includes frequency synthesizer self-calibration circuitry. This calibration should be done regularly, and must be performed after turning on power and before using a new frequency (or channel). The number of XOSC cycles for completing the PLL calibration is given in Table 5-5.

The calibration can be initiated automatically or manually. The synthesizer can be automatically calibrated each time the synthesizer is turned on, or each time the synthesizer is turned off automatically. This is configured with the MCSM0.FS_AUTOCAL register setting. In manual mode, the calibration is initiated when the SCAL command strobe is activated in the IDLE mode.

NOTE

The calibration values are maintained in SLEEP mode, so the calibration is still valid after waking up from SLEEP mode unless supply voltage or temperature has changed significantly.

To check that the PLL is in lock, the user can program register IOCFGx.GDOx_CFG to 0x0A, and use the lock detector output available on the GDOx pin as an interrupt for the MCU (x = 0, 1, or 2). A positive transition on the GDOx pin means that the PLL is in lock. As an alternative the user can read register FSCAL1. The PLL is in lock if the register content is different from 0x3F. Refer also to the CC115L Errata Notes SWRZ037.

For more robust operation, the source code could include a check so that the PLL is re-calibrated until PLL lock is achieved if the PLL does not lock the first time.

5.14 Voltage Regulators

CC115L contains several on-chip linear voltage regulators that generate the supply voltages needed by low-voltage modules. These voltage regulators are invisible to the user, and can be viewed as integral parts of the various modules. The user must however make sure that the absolute maximum ratings and required pin voltages in Table 3-1 and Table 5-1 are not exceeded.

By setting the CSn pin low, the voltage regulator to the digital core turns on and the crystal oscillator starts. The SO pin on the SPI interface must go low before the first positive edge of SCLK (setup time is given in Table 5-1).

If the chip is programmed to enter power-down mode (SPWD strobe issued), the power will be turned off after CSn goes high. The power and crystal oscillator will be turned on again when CSn goes low.

The voltage regulator for the digital core requires one external decoupling capacitor.

The voltage regulator output should only be used for driving the CC115L.

Copyright © 2011–2014, Texas Instruments Incorporated

5.15 Output Power Programming

The RF output power level from the device has two levels of programmability. The PATABLE register can hold two user selected output power settings and the FREND0.PA_POWER value selects the PATABLE entry to use (0 or 1). PATABLE must be programmed in burst mode if writing to other entries than PATABLE[0]. See Section 5.5.6 for more programming details.

For OOK modulation, FREND0.PA_POWER should be 1 and the logic 0 and logic 1 power levels shall be programmed to index 0 and 1 respectively. For all other modulation formats, the desired output power should be programmed to index 0.

Table 5-8 contains the recommended PATABLE settings for various output levels and frequency bands. DN013 SWRA168 gives the complete tables for the different frequency bands using multi-layer inductors. Using PA settings from 0x61 to 0x6F is not allowed. Table 5-11 contains output power and current consumption for default PATABLE setting (0xC6). The measurements are done on SWRR045.

NOTE

All content of the PATABLE except for the first byte (index 0) is lost when entering the SLEEP state.

Table 5-8. Optimum PATABLE Settings for Various Output Power Levels Using Wire-Wound Inductors in 868- and 915-MHz Frequency Bands

Output Power [dBm]	868 MHz		915 MHz	
	Setting	Current Consumption, Typ. [mA]	Setting	Current Consumption, Typ. [mA]
12/11	0xC0	34.2	0xC0	33.4
10	0xC5	30.0	0xC3	30.7
7	0xCD	25.8	0xCC	25.7
5	0x86	19.9	0x84	20.2
0	0x50	16.8	0x8E	17.2
−6	0x37	16.4	0x38	17.0
−10	0x26	14.5	0x27	14.8
−15	0x1D	13.3	0x1E	13.3
−20	0x17	12.6	0x0E	12.5
−30	0x03	12.0	0x03	11.9

Table 5-9. Output Power and Current Consumption for Default PATABLE Setting Using Wire-Wound Inductors in 868- and 915-MHz Frequency Bands

Default Power Setting	868 MHz		915 MHz	
	Output Power [dBm]	Current Consumption, Typ. [mA]	Output Power [dBm]	Current Consumption, Typ. [mA]
0xC6	9.6	29.4	8.9	28.7

Copyright © 2011–2014, Texas Instruments Incorporated

Table 5-10. Optimum PATABLE Settings for Various Output Power Levels Using Multi-layer Inductors in 868- and 915-MHz Frequency Bands

Output Power [dBm]	868 MHz		915 MHz	
	Setting	Current Consumption, Typ. [mA]	Setting	Current Consumption, Typ. [mA]
10	0xC2	32.4	0xC0	31.8
7	0xCB	26.8	0xC7	26.9
5	0x81	21.0	0xCD	24.3
0	0x50	16.9	0x8E	16.7
−10	0x27	15.0	0x27	14.9
−15	0x1E	13.4	0x1E	13.4
−20	0x0F	12.7	0x0E	12.6
−30	0x03	12.1	0x03	12.0

Table 5-11. Output Power and Current Consumption for Default PATABLE Setting Using Multi-layer Inductors in 868- and 915-MHz Frequency Bands

Default Power Setting	868 MHz		915 MHz	
	Current Consumption, Typ. [mA]	Output Power [dBm]	Current Consumption, Typ. [mA]	Output Power [dBm]
0xC6	8.5	29.5	7.2	27.4

Copyright © 2011–2014, Texas Instruments Incorporated

5.16 General Purpose and Test Output Control Pins

The three digital output pins GDO0, GDO1, and GDO2 are general control pins configured with IOCFG0.GDO0_CFG, IOCFG1.GDO1_CFG, and IOCFG2.GDO2_CFG respectively. Table 5-12 shows the different signals that can be monitored on the GDO pins. These signals can be used as inputs to the MCU.

GDO1 is the same pin as the SO pin on the SPI interface, thus the output programmed on this pin will only be valid when CSn is high. The default value for GDO1 is 3-stated which is useful when the SPI interface is shared with other devices.

The default value for GDO0 is a 135–141 kHz clock output (XOSC frequency divided by 192). Since the XOSC is turned on at power-on-reset, this can be used to clock the MCU in systems with only one crystal. When the MCU is up and running, it can change the clock frequency by writing to IOCFG0.GDO0_CFG.

If the IOCFGx.GDOx_CFG setting is less than 0x20 and IOCFGx_GDOx_INV is 0 (1), the GDO0 and GDO2 pins will be hardwired to 0 (1), and the GDO1 pin will be hardwired to 1 (0) in the SLEEP state. These signals will be hardwired until the CHIP_RDYn signal goes low.

If the IOCFGx.GDOx_CFG setting is 0x20 or higher, the GDO pins will work as programmed also in SLEEP state. As an example, GDO1 is high impedance in all states if IOCFG1.GDO1_CFG=0x2E.

Table 5-12. GDOx Signal Selection (x = 0, 1, or 2)

GDOx_CFG [5:0]	Description
0 (0x00) – 1 (0x01)	Reserved – used for test.
2 (0x02)	Associated to the TX FIFO: Asserts when the TX FIFO is filled at or above the TX FIFO threshold. Deasserts when the TX FIFO is below the same threshold.
3 (0x03)	Associated to the TX FIFO: Asserts when TX FIFO is full. Deasserts when the TX FIFO is drained below the TX FIFO threshold.
4 (0x04)	Reserved – used for test.
5 (0x05)	Asserts when the TX FIFO has underflowed. Deasserts when the FIFO is flushed.
6 (0x06)	Asserts when sync word has been sent, and de-asserts at the end of the packet. The pin will de-assert if the TX FIFO underflows.
7 (0x07) – 9 (0x09)	Reserved - used for test.
10 (0x0A)	Lock detector output. The PLL is in lock if the lock detector output has a positive transition or is constantly logic high. To check for PLL lock the lock detector output should be used as an interrupt for the MCU.
11 (0x0B)	Serial Clock. Synchronous to the data in synchronous serial mode. Data is sampled by CC 115L115L115L on the rising edge of the serial clock when GDOx_INV=0.
12 (0x0C)	Serial Synchronous Data Output. Used for synchronous serial mode.
13 (0x0D)	Serial Data Output. Used for asynchronous serial mode.
14 (0x0E) – 26 (0x1A)	Reserved - used for test.
27 (0x1B)	PA_PD. Note: PA_PD will have the same signal level in SLEEP and TX states. To control an external PA in applications where the SLEEP state is used it is recommended to use GDOx_CFGx=0x2F instead.
28 (0x1D) – 40 (0x28)	Reserved - used for test.
41 (0x29)	CHIP_RDYn
42 (0x2A)	Reserved - used for test.
43 (0x2B)	XOSC_STABLE
44 (0x2C) - 45 (0x2D)	Reserved - used for test.
46 (0x2E)	High impedance (3-state)
47 (0x2F)	HW to 0 (HW1 achieved by setting GDOx_INV=1). Can be used to control an external PA.

Copyright © 2011–2014, Texas Instruments Incorporated

Table 5-12. GDOx Signal Selection (x = 0, 1, or 2) (continued)

GDOx_CFG [5:0]	Description	
48 (0x30)	CLK_XOSC/1	Note: There are 3 GDO pins, but only one CLK_XOSC/n can be selected as an output at any time. If CLK_XOSC/n is to be monitored on one of the GDO pins, the other two GDO pins must be configured to values less than 0x30. The GDO0 default value is CLK_XOSC/192. To optimize RF performance, these signals should not be used while the radio is in TX mode.
49 (0x31)	CLK_XOSC/1.5	
50 (0x32)	CLK_XOSC/2	
51 (0x33)	CLK_XOSC/3	
52 (0x34)	CLK_XOSC/4	
53 (0x35)	CLK_XOSC/6	
54 (0x36)	CLK_XOSC/8	
55 (0x37)	CLK_XOSC/12	
56 (0x38)	CLK_XOSC/16	
57 (0x39)	CLK_XOSC/24	
58 (0x3A)	CLK_XOSC/32	
59 (0x3B)	CLK_XOSC/48	
60 (0x3C)	CLK_XOSC/64	
61 (0x3D)	CLK_XOSC/96	
62 (0x3E)	CLK_XOSC/128	
63 (0x3F)	CLK_XOSC/192	

Copyright © 2011–2014, Texas Instruments Incorporated

5.17 Asynchronous and Synchronous Serial Operation

Several features and modes of operation have been included in the CC115L to provide backward compatibility with previous Chipcon products and other existing RF communication systems. For new systems, it is recommended to use the built-in packet handling features, as they can give more robust communication, significantly offload the microcontroller, and simplify software development.

5.17.1 Asynchronous Serial Operation

Asynchronous transfer is included in the CC115L for backward compatibility with systems that are already using the asynchronous data transfer.

When asynchronous transfer is enabled, all packet handling support is disabled and it is not possible to use Manchester encoding.

Asynchronous serial mode is enabled by setting PKTCTRL0.PKT_FORMAT to 3. Strobing STX will configure the GDO0 pin as data input (TX data) regardless of the content of the IOCFG0 register. Data output can be on GDO0, GDO1, or GDO2. This is set by the IOCFG0.GDO0_CFG, IOCFG1.GDO1_CFG and IOCFG2.GDO2_CFG fields.

The CC115L modulator samples the level of the asynchronous input 8 times faster than the programmed data rate. The timing requirement for the asynchronous stream is that the error in the bit period must be less than one eighth of the programmed data rate.

5.17.2 Synchronous Serial Operation

Setting PKTCTRL0.PKT_FORMAT to 1 enables synchronous serial mode. When using this mode, sync detection should be disabled together with CRC calculation (MDMCFG2.SYNC_MODE=000 and PKTCTRL0.CRC_EN=0). Infinite packet length mode should be used (PKTCTRL0.LENGTH_CONFIG=10b).

In synchronous serial mode, data is transferred on a two-wire serial interface. The CC115L provides a clock that is used to set up new data on the data input line or sample data on the data output line. Data input (TX data) is on the GDO0 pin. This pin will automatically be configured as an input when TX is active. The TX latency is 8 bits.

The MCU must handle preamble and sync word insertion/detection in software, together with CRC calculation and insertion.

Copyright © 2011–2014, Texas Instruments Incorporated

5.18 System Considerations and Guidelines

5.18.1 SRD Regulations

International regulations and national laws regulate the use of radio receivers and transmitters. Short Range Devices (SRDs) for license free operation below 1 GHz are usually operated in the 315 MHz, 433 MHz, 868 MHz, or 915 MHz frequency bands. The CC115L is specifically designed for such use with its 300–348 MHz, 387–464 MHz, and 779–928 MHz operating ranges. The most important regulations when using the CC115L in the 315 MHz, 433 MHz, 868 MHz, or 915 MHz frequency bands are EN 300 220 V2.3.1 (Europe) and FCC CFR47 Part 15 (USA).

For compliance with modulation bandwidth requirements under EN 300 220 V2.3.1 in the 863 to 870 MHz frequency range it is recommended to use a 26-MHz crystal for frequencies below 869 MHz and a 27 MHz crystal for frequencies above 869 MHz.

Compliance with regulations is dependent on the complete system performance. It is the customer's responsibility to ensure that the system complies with regulations.

5.18.2 Calibration in Multi-Channel Systems

CC115L is highly suited for multi-channel systems due to its agile frequency synthesizer and effective communication interface.

Charge pump current, VCO current, and VCO capacitance array calibration data is required for each frequency when implementing a multi-channel system. There are 3 ways of obtaining the calibration data from the chip:

1. Calibration for every frequency change. The PLL calibration time is 712/724 µs (26 MHz crystal and TEST0 = 0x09/0B, see Table 5-6). The blanking interval between each frequency hop is then 787/799 µs.
2. Perform all necessary calibration at startup and store the resulting FSCAL3, FSCAL2, and FSCAL1 register values in MCU memory. The VCO capacitance calibration FSCAL1 register value must be found for each RF frequency to be used. The VCO current calibration value and the charge pump current calibration value available in FSCAL2 and FSCAL3 respectively are not dependent on the RF frequency, so the same value can therefore be used for all RF frequencies for these two registers. Between each frequency hop, the calibration process can then be replaced by writing the FSCAL3, FSCAL2 and FSCAL1 register values that corresponds to the next RF frequency. The PLL turn on time is approximately 75 µs (see Table 5-5). The blanking interval between each frequency hop is then approximately 75 µs.
3. Run calibration on a single frequency at startup. Next write 0 to FSCAL3[5:4] to disable the charge pump calibration. After writing to FSCAL3[5:4], strobe STX with MCSM0.FS_AUTOCAL=1 for each new frequency hop. That is, VCO current and VCO capacitance calibration is done, but not charge pump current calibration. When charge pump current calibration is disabled the calibration time is reduced from 712/724 µs to 145/157 µs (26 MHz crystal and TEST0 = 0x09/0B, see Table 5-6). The blanking interval between each frequency hop is then 220/232 µs.

There is a trade off between blanking time and memory space needed for storing calibration data in non-volatile memory. Solution 2) above gives the shortest blanking interval, but requires more memory space to store calibration values. This solution also requires that the supply voltage and temperature do not vary much in order to have a robust solution. Solution 3) gives 567 µs smaller blanking interval than solution 1).

The recommended settings for TEST0.VCO_SEL_CAL_EN change with frequency. This means that one should always use SmartRF Studio to get the correct settings for a specific frequency before doing a calibration, regardless of which calibration method is being used.

NOTE

The content in the TEST0 register is not retained in SLEEP state, thus it is necessary to re-write this register when returning from the SLEEP state.

Copyright © 2011–2014, Texas Instruments Incorporated

5.18.3 Wideband Modulation when not Using Spread Spectrum

Digital modulation systems under FCC Section 15.247 include 2-FSK, GFSK, and 4-FSK modulation. A maximum peak output power of 1 W (+30 dBm) is allowed if the 6 dB bandwidth of the modulated signal exceeds 500 kHz. In addition, the peak power spectral density conducted to the antenna shall not be greater than +8 dBm in any 3 kHz band.

Operating at high data rates and frequency separation, the CC115L is suited for systems targeting compliance with digital modulation system as defined by FCC Section 15.247. An external power amplifier such as CC1190 SWRS089 is needed to increase the output above +11 dBm. Refer to DN006 SWRA123 for further details concerning wideband modulation and CC115L.

5.18.4 Data Burst Transmissions

The high maximum data rate of CC115L opens up for burst transmissions. A low average data rate link (e.g. 10 kBaud) can be realized by using a higher over-the-air data rate. Buffering the data and transmitting in bursts at high data rate (e.g. 500 kBaud) will reduce the time in TX mode, and hence also reduce the average current consumption significantly. Reducing the time in TX mode will reduce the likelihood of collisions with other systems in the same frequency range.

5.18.5 Continuous Transmissions

In data streaming applications, the CC115L opens up for continuous transmissions at 500 kBaud effective data rate. As the modulation is done with a closed loop PLL, there is no limitation in the length of a transmission (open loop modulation used in some radios often prevents this kind of continuous data streaming and reduces the effective data rate).

5.18.6 Increasing Output Power

The PA portion of the CC1190 SWRS089 can be used together with CC115L in applications where increased output power is needed.

Copyright © 2011–2014, Texas Instruments Incorporated

5.19 Configuration Registers

The configuration of CC115L is done by programming 8-bit registers. The optimum configuration data based on selected system parameters are most easily found by using the SmartRF Studio software SWRC176. Complete descriptions of the registers are given in the following tables. After chip reset, all the registers have default values as shown in the tables. The optimum register setting might differ from the default value. After a reset, all registers that shall be different from the default value therefore needs to be programmed through the SPI interface.

There are 9 command strobe registers, listed in Table 5-13. Accessing these registers will initiate the change of an internal state or mode. There are 34 normal 8-bit configuration registers listed in Table 5-14 and SmartRF Studio SWRC176 will provide recommended settings for these registers (Addresses marked as “Not Used” can be part of a burst access and one can write a dummy value to them. Addresses marked as “Reserved” must be configured according to SmartRF Studio SWRC176).

There are also 5 status registers that are listed in Table 5-15. These registers, which are read-only, contain information about the status of CC115L.

The TX FIFO is accessed through one 8-bit register. During the header byte transfer and while writing data to a register or the TX FIFO, a status byte is returned on the SO line. This status byte is described in Table 5-2.

Table 5-16 summarizes the SPI address space. The address to use is given by adding the base address to the left and the burst and read/write bits on the top. Note that the burst bit has different meaning for base addresses above and below 0x2F.

Table 5-13. Command Strobes

Address	Strobe Name	Description
0x30	SRES	Reset chip.
0x31	SFSTXON	Enable and calibrate frequency synthesizer (if MCSM0.FS_AUTOCAL=1).
0x32	SXOFF	Turn off crystal oscillator.
0x33	SCAL	Calibrate frequency synthesizer and turn it off. SCAL can be strobed from IDLE mode without setting manual calibration mode (MCSM0.FS_AUTOCAL=0)
0x34	Reserved	
0x35	STX	In IDLE state: Enable TX. Perform calibration first if MCSM0.FS_AUTOCAL=1.
0x36	SIDLE	Enter IDLE state
0x37 - 0x38	Reserved	
0x39	SPWD	Enter power down mode when CSn goes high.
0x3A	Reserved	
0x3B	SFTX	Flush the TX FIFO buffer. Only issue SFTX in IDLE or TXFIFO_UNDERFLOW states.
0x3C	Reserved	
0x3D	SNOP	No operation. May be used to get access to the chip status byte.

Copyright © 2011–2014, Texas Instruments Incorporated

Table 5-14. Configuration Registers Overview

Address	Register	Description	Preserved in SLEEP State	Details on Page Number
0x00	IOCFG2	GDO2 output pin configuration	Yes	Table 5-17
0x01	IOCFG1	GDO1 output pin configuration	Yes	Table 5-18
0x02	IOCFG0	GDO0 output pin configuration	Yes	Table 5-19
0x03	FIFOTHR	TX FIFO thresholds	Yes	Table 5-20
0x04	SYNC1	Sync word, high byte	Yes	Table 5-21
0x05	SYNC0	Sync word, low byte	Yes	Table 5-22
0x06	PKTLEN	Packet length	Yes	Table 5-23
0x07	Not used			
0x08	PKTCTRL0	Packet automation control	Yes	Table 5-24
0x09	Not used			
0x0A	CHANNR	Channel number	Yes	Table 5-25
0x0B	Not used			
0x0C	FSCTRL0	Frequency synthesizer control	Yes	Table 5-26
0x0D	FREQ2	Frequency control word, high byte	Yes	Table 5-27
0x0E	FREQ1	Frequency control word, middle byte	Yes	Table 5-28
0x0F	FREQ0	Frequency control word, low byte	Yes	Table 5-29
0x10	MDMCFG4	Modem configuration	Yes	Table 5-30
0x11	MDMCFG3	Modem configuration	Yes	Table 5-31
0x12	MDMCFG2	Modem configuration	Yes	Table 5-32
0x13	MDMCFG1	Modem configuration	Yes	Table 5-33
0x14	MDMCFG0	Modem configuration	Yes	Table 5-34
0x15	DEVIATN	Modem deviation setting	Yes	Table 5-35
0x16	Not used			
0x17	MCSM1	Main Radio Control State Machine configuration	Yes	Table 5-36
0x18	MCSM0	Main Radio Control State Machine configuration	Yes	Table 5-37
0x19 - 0x1F	Not Used			
0x20	RESERVED		Yes	Table 5-38
0x21	Not Used			
0x22	FREND0	Front end TX configuration	Yes	Table 5-39
0x23	FSCAL3	Frequency synthesizer calibration	Yes	Table 5-40
0x24	FSCAL2	Frequency synthesizer calibration	Yes	Table 5-41
0x25	FSCAL1	Frequency synthesizer calibration	Yes	Table 5-42
0x26	FSCAL0	Frequency synthesizer calibration	Yes	Table 5-43
0x27 - 0x28	Not Used			
0x29 - 0x2B	RESERVED		No	Table 5-44
0x2C	TEST2	Various test settings	No	Table 5-47
0x2D	TEST1	Various test settings	No	Table 5-48

Copyright © 2011–2014, Texas Instruments Incorporated

Table 5-14. Configuration Registers Overview (continued)

Address	Register	Description	Preserved in SLEEP State	Details on Page Number
0x2E	TEST0	Various test settings	No	Table 5-49

Table 5-15. Status Registers Overview

Address	Register	Description	Details on page number
0x30 (0xF0)	PARTNUM	Part number for CC115L	Table 5-50
0x31 (0xF1)	VERSION	Current version number	Table 5-51
0x32 – 0x34 (0xF2 – 0xF4)	Reserved		
0x35 (0xF5)	MARCSTATE	Control state machine state	Table 5-52
0x36 - 0x37 (0xF6 – 0xF7)	Reserved		
0x38 (0xF8)	PKTSTATUS	Current GDOx status and packet status	Table 5-53
0x39 (0xF9)	Reserved		
0x3A (0xFA)	TXBYTES	Underflow and number of bytes in the TX FIFO	Table 5-54
0x3B - 0x3D (0xFB - 0xFD)	Reserved		

Copyright © 2011–2014, Texas Instruments Incorporated

Table 5-16. SPI Address Space

	Write		Read		
	Single Byte	Burst	Single Byte	Burst	
	+0x00	+0x40	+0x80	+0xC0	
0x00	IOCFG2				R/W configuration registers, burst access possible
0x01	IOCFG1				
0x02	IOCFG0				
0x03	FIFOTHR				
0x04	SYNC1				
0x05	SYNC0				
0x06	PKTLEN				
0x07	Not Used				
0x08	PKTCTRL0				
0x09	Not Used				
0x0A	CHANNR				
0x0B	Not Used				
0x0C	FSCTRL0				
0x0D	FREQ2				
0x0E	FREQ1				
0x0F	FREQ0				
0x10	MDMCFG4				
0x11	MDMCFG3				
0x12	MDMCFG2				
0x13	MDMCFG1				
0x14	MDMCFG0				
0x15	DEVIATN				
0x16	Not Used				
0x17	MCSM1				
0x18	MCSM0				
0x19	Not Used				
0x1A	Not Used				
0x1B	Not Used				
0x1C	Not Used				
0x1D	Not Used				
0x1E	Not Used				
0x1F	Not Used				
0x20	Not Used				
0x21	Not Used				
0x22	FREND0				
0x23	FSCAL3				
0x24	FSCAL2				
0x25	FSCAL1				
0x26	FSCAL0				
0x27	Not Used				
0x28	Not Used				
0x29	RESERVED				
0x2A	RESERVED				
0x2B	RESERVED				
0x2C	TEST2				
0x2D	TEST1				
0x2E	TEST0				
0x2F	Not Used				

Copyright © 2011–2014, Texas Instruments Incorporated

Table 5-16. SPI Address Space (continued)

	Write		Read		
	Single Byte	Burst	Single Byte	Burst	
	+0x00	+0x40	+0x80	+0xC0	
0x30	SRES		SRES	PARTNUM	Command Strobes, Status registers (read only) and multi byte registers
0x31	SFSTXON		SFSTXON	VERSION	
0x32	SXOFF		SXOFF	Reserved	
0x33	SCAL		SCAL	Reserved	
0x34	Not Used		Reserved	Reserved	
0x35	STX		STX	MARCSTATE	
0x36	SIDLE		SIDLE	Reserved	
0x37	Reserved		Reserved	Reserved	
0x38	Reserved		Reserved	PKTSTATUS	
0x39	SPWD		SPWD	Reserved	
0x3A	Reserved		Reserved	TXBYTES	
0x3B	SFTX		SFTX	Reserved	
0x3C	Reserved		Reserved	Reserved	
0x3D	SNOP		SNOP	Reserved	
0x3E	PATABLE	PATABLE	PATABLE	PATABLE	
0x3F	TX FIFO	TX FIFO	Reserved	Reserved	

5.19.1 Configuration Register Details - Registers with preserved values in SLEEP state

Table 5-17. 0x00: IOCFG2 - GDO2 Output Pin Configuration

Bit	Field Name	Reset	R/W	Description
7			R0	Not used
6	GDO2_INV	0	R/W	Invert output, that is, select active low (1) / high (0)
5:0	GDO2_CFG[5:0]	41 (101001)	R/W	Default is CHP_RDYn (see Table 5-12).

Table 5-18. 0x01: IOCFG1 - GDO1 Output Pin Configuration

Bit	Field Name	Reset	R/W	Description
7	GDO_DS	0	R/W	Set high (1) or low (0) output drive strength on the GDO pins.
6	GDO1_INV	0	R/W	Invert output, that is, select active low (1) / high (0)
5:0	GDO1_CFG[5:0]	46 (101110)	R/W	Default is 3-state (see Table 5-12).

Table 5-19. 0x02: IOCFG0 - GDO0 Output Pin Configuration

Bit	Field Name	Reset	R/W	Description
7		0	R/W	Use setting from SmartRF Studio
6	GDO0_INV	0	R/W	Invert output, that is, select active low (1) / high (0)
5:0	GDO0_CFG[5:0]	63 (0x3F)	R/W	Default is CLK_XOSC/192 (see Table 5-12). It is recommended to disable the clock output in initialization, in order to optimize RF performance.

Copyright © 2011–2014, Texas Instruments Incorporated

Table 5-20. 0x03: FIFOTHR - TX FIFO Thresholds

Bit	Field Name	Reset	R/W	Description	
7:4		0	R/W	Use setting from SmartRF Studio	
3:0	FIFO_THR[3:0]	7 (0111)	R/W	Set the threshold for the TX FIFO. The threshold is exceeded when the number of bytes in the TX FIFO is equal to or higher than the threshold value.	
				Setting	Bytes in TX FIFO
				0 (0000)	61
				1 (0001)	57
				2 (0010)	53
				3 (0011)	49
				4 (0100)	45
				5 (0101)	41
				6 (0110)	37
				7 (0111)	33
				8 (1000)	29
				9 (1001)	25
				10 (1010)	21
				11 (1011)	17
				12 (1100)	13
				13 (1101)	9
				14 (1110)	5
				15 (1111)	1

Table 5-21. 0x04: SYNC1 - Sync Word, High Byte

Bit	Field Name	Reset	R/W	Description
7:0	SYNC[15:8]	211 (0xD3)	R/W	8 MSB of 16-bit sync word

Table 5-22. 0x05: SYNC0 - Sync Word, Low Byte

Bit	Field Name	Reset	R/W	Description
7:0	SYNC[7:0]	145 (0x91)	R/W	8 LSB of 16-bit sync word

Table 5-23. 0x06: PKTLEN - Packet Length

Bit	Field Name	Reset	R/W	Description
7:0	PACKET_LENGTH	255 (0xFF)	R/W	Indicates the packet length when fixed packet length mode is enabled. This value must be different from 0.

Table 5-24. 0x08: PKTCTRL0 - Packet Automation Control

Bit	Field Name	Reset	R/W	Description
7			R0	Not used
6		1	R/W	Use setting from SmartRF Studio

Copyright © 2011–2014, Texas Instruments Incorporated

Table 5-24. 0x08: PKTCTRL0 - Packet Automation Control (continued)

Bit	Field Name	Reset	R/W	Description	
5:4	PKT_FORMAT[1:0]	0 (00)	R/W	Format of TX data	
				Setting	Packet format
				0 (00)	Normal mode, use TX FIFO
				1 (01)	Synchronous serial mode, Data in on GDO0
				2 (10)	Random TX mode; sends random data using PN9 generator. Used for test.
				3 (11)	Asynchronous serial mode, Data in on GDO0
3		0	R0	Not used	
2	CRC_EN	1	R/W	1: CRC calculation enabled 0: CRC calculation disabled	
1:0	LENGTH_CONFIG[1:0]	1 (01)	R/W	Configure the packet length	
				Setting	Packet length configuration
				0 (00)	Fixed packet length mode. Length configured in PKTLEN register
				1 (01)	Variable packet length mode. Packet length configured by the first byte written to the TX FIFO
				2 (10)	Infinite packet length mode
				3 (11)	Reserved

Table 5-25. 0x0A: CHANNR - Channel Number

Bit	Field Name	Reset	R/W	Description
7:0	CHAN[7:0]	0 (0x00)	R/W	The 8-bit unsigned channel number, which is multiplied by the channel spacing setting and added to the base frequency.

Table 5-26. 0x0C: FSCTRL0 - Frequency Synthesizer Control

Bit	Field Name	Reset	R/W	Description
7:0	FREQOFF[7:0]	0 (0x00)	R/W	Frequency offset added to the base frequency before being used by the frequency synthesizer. (2s-complement). Resolution is FXTAL/2^{14} (1.59kHz-1.65kHz); range is ±202 kHz to ±210 kHz, dependent of XTAL frequency.

Table 5-27. 0x0D: FREQ2 - Frequency Control Word, High Byte

Bit	Field Name	Reset	R/W	Description
7:6	FREQ[23:22]	0 (00)	R	FREQ[23:22] is always 0 (the FREQ2 register is less than 36 with 26 - 27 MHz crystal)
5:0	FREQ[21:16]	30 (011110)	R/W	FREQ[23:0] is the base frequency for the frequency synthesizer in increments of fXOSC/2^{16}. $f_{carrier} = \frac{f_{XOSC}}{2^{16}} \cdot FREQ[23:0]$

Table 5-28. 0x0E: FREQ1 - Frequency Control Word, Middle Byte

Bit	Field Name	Reset	R/W	Description
7:0	FREQ[15:8]	196 (0xC4)	R/W	See Table 5-27.

Copyright © 2011–2014, Texas Instruments Incorporated

Table 5-29. 0x0F: FREQ0 - Frequency Control Word, Low Byte

Bit	Field Name	Reset	R/W	Description
7:0	FREQ[7:0]	236 (0xEC)	R/W	See Table 5-27.

Table 5-30. 0x10: MDMCFG4 - Modem Configuration

Bit	Field Name	Reset	R/W	Description
7:4		8 (1000)	R/W	Use setting from SmartRF Studio SWRC176
3:0	DRATE_E[3:0]	12 (1100)	R/W	The exponent of the user specified symbol rate

Table 5-31. 0x11: MDMCFG3 - Modem Configuration

Bit	Field Name	Reset	R/W	Description
7:0	DRATE_M[7:0]	34 (0x22)	R/W	The mantissa of the user specified symbol rate. The symbol rate is configured using an unsigned, floating-point number with 9-bit mantissa and 4-bit exponent. The 9th bit is a hidden '1'. The resulting data rate is: $R_{DATA} = \frac{(256 + DRATE_M) \cdot 2^{DRATE_E}}{2^{28}} \cdot f_{XOSC}$ The default values give a data rate of 115.051 kBaud (closest setting to 115.2 kBaud), assuming a 26.0 MHz crystal.

Copyright © 2011–2014, Texas Instruments Incorporated

Table 5-32. 0x12: MDMCFG2 - Modem Configuration

Bit	Field Name	Reset	R/W	Description	
7		0	R/W	Use setting from SmartRF Studio SWRC176	
6:4	MOD_FORMAT[2:0]	0 (000)	R/W	The modulation format of the radio signal	
				Setting	Modulation format
				0 (000)	2-FSK
				1 (001)	GFSK
				2 (010)	Reserved
				3 (011)	OOK
				4 (100)	4-FSK
				5 (101)	Reserved
				6 (110)	Reserved
				7 (111)	Reserved
				4-FSK modulation cannot be used together with Manchester encoding	
3	MANCHESTER_EN	0	R/W	Enables Manchester encoding/decoding. 0 = Disable 1 = Enable Manchester encoding cannot be used when using asynchronous serial mode or 4-FSK modulation	
2:0	SYNC_MODE[2:0]	2 (010)	R/W	Number of sync bits transmitted	
				Setting	Sync-word qualifier mode
				0 (000)	No preamble/sync
				1 (001)	16-bits sync word
				2 (010)	Reserved
				3 (011)	32-bits sync word
				4 (100) – 7 (111)	Reserved

Table 5-33. 0x13: MDMCFG1 - Modem Configuration

Bit	Field Name	Reset	R/W	Description	
7		0	R/W	Use setting from SmartRF Studio SWRC176	
6:4	NUM_PREAMBLE[2:0]	2 (010)	R/W	Sets the minimum number of preamble bytes to be transmitted	
				Setting	Number of preamble bytes
				0 (000)	2
				1 (001)	3
				2 (010)	4
				3 (011)	6
				4 (100)	8
				5 (101)	12
				6 (110)	16
				7 (111)	24
3:2			R0	Not used	
1:0	CHANSPC_E[1:0]	2 (10)	R/W	2 bit exponent of channel spacing	

Copyright © 2011–2014, Texas Instruments Incorporated

Table 5-34. 0x14: MDMCFG0 - Modem Configuration

Bit	Field Name	Reset	R/W	Description
7:0	CHANSPC_M[7:0]	248 (0xF8)	R/W	8-bit mantissa of channel spacing. The channel spacing is multiplied by the channel number CHAN and added to the base frequency. It is unsigned and has the format: $\Delta f_{CHANNEL} = \frac{f_{XOSC}}{2^{18}} \cdot (256 + CHANSPC_M) \cdot 2^{CHANSPC_E}$ The default values give 199.951 kHz channel spacing (the closest setting to 200 kHz), assuming 26.0 MHz crystal frequency.

Table 5-35. 0x15: DEVIATN - Modem Deviation Setting

Bit	Field Name	Reset	R/W	Description	
7			R0	Not used.	
6:4	DEVIATION_E[2:0]	4 (100)	R/W	Deviation exponent.	
3			R0	Not used.	
2:0	DEVIATION_M[2:0]	7 (111)	R/W	2-FSK/GFSK/4-FSK	Specifies the nominal frequency deviation from the carrier for a '0' (-DEVIATN) and '1' (+DEVIATN) in a mantissa- exponent format, interpreted as a 4-bit value with MSB implicit 1. The resulting frequency deviation is given by: $f_{dev} = \frac{f_{XOSC}}{2^{17}} \cdot (8 + DEVIATION_M) \cdot 2^{DEVIATION_E}$ The default values give ±47.607 kHz deviation assuming 26.0 MHz crystal frequency.
				OOK	This setting has no effect

Table 5-36. 0x17: MCSM1 - Main Radio Control State Machine Configuration

Bit	Field Name	Reset	R/W	Description	
7:6			R0	Not used	
5:2		3 (1100)	R/W	Use setting from SmartRF Studio SWRC176	
1:0	TXOFF_MODE[1:0]	0 (00)	R/W	Select what should happen when a packet has been sent	
				Setting	Next state after finishing packet transmission
				0 (00)	IDLE
				1 (01)	FSTXON
				2 (10)	Stay in TX (start sending preamble)
				3 (11)	Reserved

Copyright © 2011–2014, Texas Instruments Incorporated

Table 5-37. 0x18: MCSM0 - Main Radio Control State Machine Configuration

Bit	Field Name	Reset	R/W	Description		
7:6			R0	Not used		
5:4	FS_AUTOCAL[1:0]	0 (00)	R/W	Automatically calibrate when going to or from TX mode		
				Setting	When to perform automatic calibration	
				0 (00)	Never (manually calibrate using SCAL strobe)	
				1 (01)	When going from IDLE to TX (or FSTXON)	
				2 (10)	When going from TX back to IDLE automatically	
				3 (11)	Every 4th time when going from TX to IDLE automatically	
3:2	PO_TIMEOUT	1 (01)	R/W	Programs the number of times the six-bit ripple counter must expire after the XOSC has settled before CHP_RDYn goes low.(1) If XOSC is on (stable) during power-down, PO_TIMEOUT shall be set so that the regulated digital supply voltage has time to stabilize before CHP_RDYn goes low (PO_TIMEOUT=2 recommended). Typical start-up time for the voltage regulator is 50 µs. For robust operation it is recommended to use PO_TIMEOUT = 2 or 3 when XOSC is off during power-down.		
				Setting	Expire count	Timeout after XOSC start
				0 (00)	1	Approximately 2.3 - 2.4 µs
				1 (01)	16	Approximately 37 - 39 µs
				2 (10)	64	Approximately 149 - 155 µs
				3 (11)	256	Approximately 597 - 620 µs
				Exact timeout depends on crystal frequency.		
1		0	R/W	Use setting from SmartRF Studio SWRC176		
0	XOSC_FORCE_ON	0	R/W	Force the XOSC to stay on in the SLEEP state.		

(1) Note that the XOSC_STABLE signal will be asserted at the same time as the CHIP_RDYn signal; that is, the PO_TIMEOUT delays both signals and does not insert a delay between the signals.

Table 5-38. 0x20: RESERVED

Bit	Field Name	Reset	R/W	Description
7:3		31 (11111)	R/W	Use setting from SmartRF Studio SWRC176
2			R0	Not used
1:0		0 (00)	R/W	Use setting from SmartRF Studio SWRC176

Table 5-39. 0x22: FREND0 - Front End TX Configuration

Bit	Field Name	Reset	R/W	Description
7:6			R0	Not used
5:4	LODIV_BUF_CURRENT_TX[1:0]	1 (01)	R/W	Adjusts current TX LO buffer (input to PA). The value to use in this field is given by the SmartRF Studio software SWRC176.
3			R0	Not used
2:0	PA_POWER[2:0]	0 (000)	R/W	Selects PA power setting. This value is an index to the PATABLE, which can be programmed with up to 2 different PA settings. When using OOK, PA_POWER should be 001, and for all other modulation formats it should be 000, see Section 5.5.6.

Copyright © 2011–2014, Texas Instruments Incorporated

Table 5-40. 0x23: FSCAL3 - Frequency Synthesizer Calibration

Bit	Field Name	Reset	R/W	Description
7:6	FSCAL3[7:6]	2 (10)	R/W	Frequency synthesizer calibration configuration. The value to write in this field before calibration is given by the SmartRF Studio software SWRC176.
5:4	CHP_CURR_CAL_EN[1:0]	2 (10)	R/W	Disable charge pump calibration stage when 0.
3:0	FSCAL3[3:0]	9 (1001)	R/W	Frequency synthesizer calibration result register. Digital bit vector defining the charge pump output current, on an exponential scale: $I_OUT = I_0 \times 2^{FSCAL3[3:0]/4}$ See Section 5.18.2 for more details.

Table 5-41. 0x24: FSCAL2 - Frequency Synthesizer Calibration

Bit	Field Name	Reset	R/W	Description
7:6			R0	Not used
5	VCO_CORE_H_EN	0	R/W	Choose high (1) / low (0) VCO
4:0	FSCAL2[4:0]	10 (01010)	R/W	Frequency synthesizer calibration result register. VCO current calibration result and override value. See Section 5.18.2 for more details.

Table 5-42. 0x25: FSCAL1 - Frequency Synthesizer Calibration

Bit	Field Name	Reset	R/W	Description
7:6			R0	Not used
5:0	FSCAL1[5:0]	32 (0x20)	R/W	Frequency synthesizer calibration result register. Capacitor array setting for VCO coarse tuning. See Section 5.18.2 for more details.

Table 5-43. 0x26: FSCAL0 - Frequency Synthesizer Calibration

Bit	Field Name	Reset	R/W	Description
7			R0	Not used
6:0	FSCAL0[6:0]	13 (0x0D)	R/W	Frequency synthesizer calibration control. The value to use in this register is given by the SmartRF Studio software

5.19.2 Configuration Register Details - Registers that Lose Programming in SLEEP State

Table 5-44. 0x29: RESERVED

Bit	Field Name	Reset	R/W	Description
7:0		89 (0x59)	R/W	Use setting from SmartRF Studio SWRC176

Table 5-45. 0x2A: RESERVED

Bit	Field Name	Reset	R/W	Description
7:0		127 (0x7F)	R/W	Use setting from SmartRF Studio SWRC176

Table 5-46. 0x2B: RESERVED

Bit	Field Name	Reset	R/W	Description
7:0		63 (0x3F)	R/W	Use setting from SmartRF Studio SWRC176

Copyright © 2011–2014, Texas Instruments Incorporated

Table 5-47. 0x2C: TEST2 - Various Test Settings

Bit	Field Name	Reset	R/W	Description
7:0	TEST2[7:0]	136 (0x88)	R/W	Use setting from SmartRF Studio SWRC176 This register will be forced to 0x88 or 0x81 when it wakes up from SLEEP mode, depending on the configuration of FIFOTHR.ADC_RETENTION. The value read from this register when waking up from SLEEP always is the reset value (0x88) regardless of the ADC_RETENTION setting. The inverting of some of the bits due to the ADC_RETENTION setting is only seen INTERNALLY in the analog part.

Table 5-48. 0x2D: TEST1 - Various Test Settings

Bit	Field Name	Reset	R/W	Description
7:0	TEST1[7:0]	49 (0x31)	R/W	Use setting from SmartRF Studio SWRC176

Table 5-49. 0x2E: TEST0 - Various Test Settings

Bit	Field Name	Reset	R/W	Description
7:2	TEST0[7:2]	2 (000010)	R/W	Use setting from SmartRF Studio SWRC176
1	VCO_SEL_CAL_EN	1	R/W	Enable VCO selection calibration stage when 1
0	TEST0[0]	1	R/W	Use setting from SmartRF Studio SWRC176

5.19.3 Status Register Details

Table 5-50. 0x30 (0xF0): PARTNUM - Chip ID

Bit	Field Name	Reset	R/W	Description
7:0	PARTNUM[7:0]	0 (0x00)	R	Chip part number

Table 5-51. 0x31 (0xF1): VERSION - Chip ID

Bit	Field Name	Reset	R/W	Description
7:0	VERSION[7:0]	25 (0x19)	R	Chip version number. Subject to change without notice.

Copyright © 2011–2014, Texas Instruments Incorporated

Table 5-52. 0x35 (0xF5): MARCSTATE - Main Radio Control State Machine State

Bit	Field Name	Reset	R/W	Description		
7:5			R0	Not used		
4:0	MARC_STATE[4:0]		R	Main Radio Control FSM State		
				Value	State name	State (see Figure 5-9)
				0 (0x00)	SLEEP	SLEEP
				1 (0x01)	IDLE	IDLE
				2 (0x02)	XOFF	XOFF
				3 (0x03)	VCOON_MC	MANCAL
				4 (0x04)	REGON_MC	MANCAL
				5 (0x05)	MANCAL	MANCAL
				6 (0x06)	VCOON	FS_WAKEUP
				7 (0x07)	REGON	FS_WAKEUP
				8 (0x08)	STARTCAL	CALIBRATE
				9 (0x09)	BWBOOST	SETTLING
				10 (0x0A)	FS_LOCK	SETTLING
				11 (0x0B)	Reserved	
				12 (0x0C)	ENDCAL	CALIBRATE
				13 (0x0D) – 17 (0x11)	Reserved	
				18 (0x12)	FSTXON	FSTXON
				19 (0x13)	TX	TX
				20 (0x14)	TX_END	TX
				21 (0x15)	Reserved	
				22 (0x16)	TXFIFO_UNDERFLOW	TXFIFO_UNDERFLOW
				Note: it is not possible to read back the SLEEP or XOFF state numbers because setting CSn low will make the chip enter the IDLE mode from the SLEEP or XOFF states.		

Table 5-53. 0x38 (0xF8): PKTSTATUS - Current GDOx Status and Packet Status

Bit	Field Name	Reset	R/W	Description
7:3			R	Reserved
2	GDO2		R	Current GDO2 value. Note: the reading gives the non-inverted value irrespective of what IOCFG2.GDO2_INV is programmed to. It is not recommended to check for PLL lock by reading PKTSTATUS[2] with GDO2_CFG=0x0A.
1			R0	Not used
0	GDO0		R	Current GDO0 value. Note: the reading gives the non-inverted value irrespective of what IOCFG0.GDO0_INV is programmed to. It is not recommended to check for PLL lock by reading PKTSTATUS[0] with GDO0_CFG=0x0A.

Table 5-54. 0x3A (0xFA): TXBYTES - Underflow and Number of Bytes

Bit	Field Name	Reset	R/W	Description
7	TXFIFO_UNDERFLOW		R	
6:0	NUM_TXBYTES		R	Number of bytes in TX FIFO

Copyright © 2011–2014, Texas Instruments Incorporated

5.20 Development Kit Ordering Information

Orderable Evaluation Module	Description	Minimum Order Quantity
CC11xLDK-868-915	CC11xL Development Kit, 868/915 MHz	1
CC11xLEMK-433	CC11xL Evaluation Module Kit, 433 MHz	1

Copyright © 2011–2014, Texas Instruments Incorporated

6 Applications, Implementation, and Layout

The low cost application circuits (SWRR081 and SWRR082), which use multi layer inductors, are shown in Figure 6-1 and Figure 6-2 (see Table 6-1 for component values).

The designs in SWRR046 and SWRR045 were used for CC115L characterization. The 315 MHz and 433 MHz design SWRR046 use inexpensive multi-layer inductors similar to the low cost application circuit while the 868 MHz and 915 MHz design SWRR045 use wire-wound inductors. Wire-wound inductors give better output power and attenuation of harmonics compared to using multi-layer inductors.

Refer to design note DN032 SWRA346 for information about performance when using wire-wound inductors from different vendors. See also Design Note DN013 SWRA168, which gives the output power and harmonics when using multi-layer inductors. The output power is then typically +10 dBm when operating at 868/915 MHz.

6.1 Bias Resistor

The 56-kΩ bias resistor R171 is used to set an accurate bias current.

6.2 Balun and RF Matching

The balun and LC filter component values and their placement are important to keep the performance optimized. Gerber files and schematics for the reference designs are available for download from the TI website.

The components between the RF_N/RF_P pins and the point where the two signals are joined together (C131, C122, L122, and L132 in Figure 6-1 and L121, L131, C121, L122, C131, C122, and L132 in Figure 6-2) form a balun that converts the differential RF signal on CC115L to a single-ended RF signal. C124 is needed for DC blocking. L123, L124, and C123 (plus C125 in Figure 6-1) form a low-pass filter for harmonics attenuation.

The balun and LC filter components also matches the CC115L input impedance to a 50-Ω load. C126 provides DC blocking and is only needed if there is a DC path in the antenna. For the application circuit in Figure 6-2, this component may also be used for additional filtering, see Section 6.5.

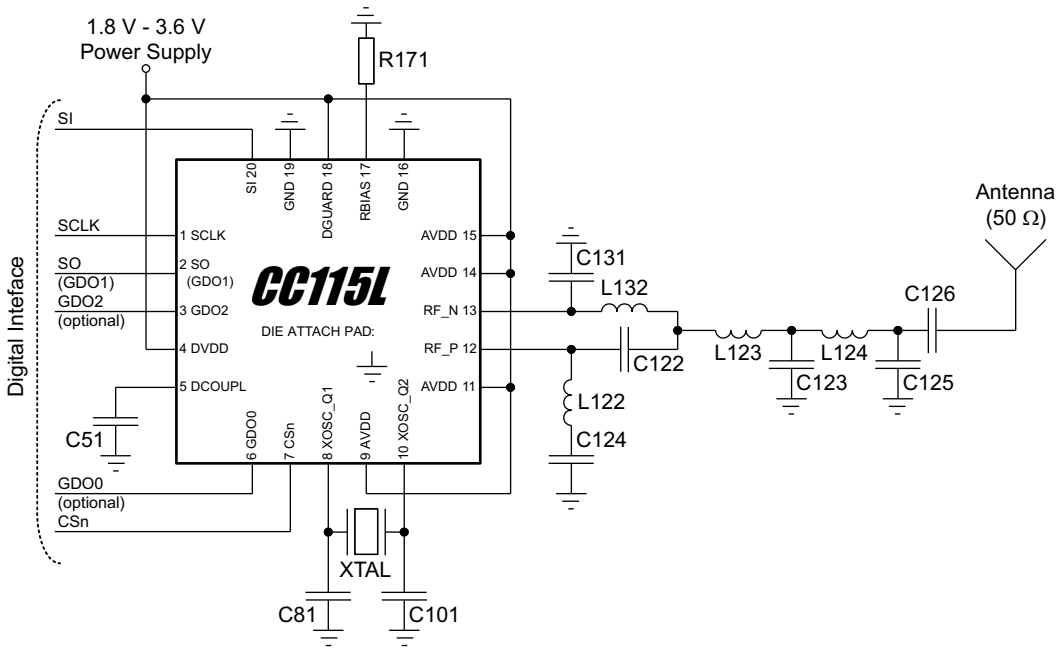

Figure 6-1. Typical Application and Evaluation Circuit 315 or 433 MHz (Excluding Supply Decoupling Capacitors)

Copyright © 2011–2014, Texas Instruments Incorporated

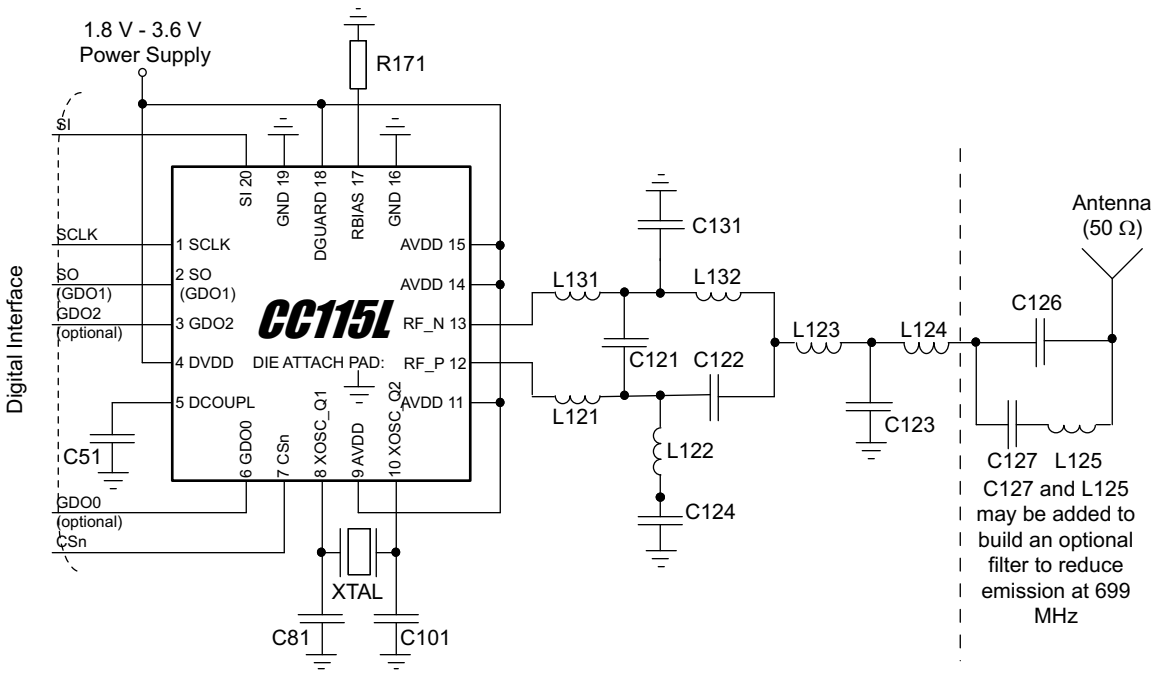

Figure 6-2. Typical Application and Evaluation Circuit 868/915 MHz (Excluding Supply Decoupling Capacitors)

Table 6-1. External Components

Component	Value at 315 MHz	Value at 433 MHz	Value at 868/915 MHz	
			Without C127 and L125	With C127 and L125
C121			1 pF	1 pF
C122	6.8 pF	3.9 pF	1.5 pF	1.5 pF
C123	12 pF	8.2 pF	3.3 pF	3.3 pF
C124	220 pF	220 pF	100 pF	100 pF
C125	6.8 pF	5.6 pF		
C126	220 pF	220 pF	100 pF	12 pF
C127				47 pF
C131	6.8 pF	3.9 pF	1.5 pF	1.5 pF
L121			12 nH	12 nH
L122	33 nH	27 nH	18 nH	18 nH
L123	18 nH	22 nH	12 nH	12 nH
L124	33 nH	27 nH	12 nH	12 nH
L125				3.3 nH
L131			12 nH	12 nH
L132	33 nH	27 nH	18 nH	18 nH

Copyright © 2011–2014, Texas Instruments Incorporated

6.3 Crystal

A crystal in the frequency range 26 - 27 MHz must be connected between the XOSC_Q1 and XOSC_Q2 pins. The oscillator is designed for parallel mode operation of the crystal. In addition, loading capacitors (C81 and C101) for the crystal are required. The loading capacitor values depend on the total load capacitance, CL, specified for the crystal. The total load capacitance seen between the crystal terminals should equal CL for the crystal to oscillate at the specified frequency.

$$C_L = \frac{1}{\frac{1}{C_{81}} + \frac{1}{C_{101}}} + C_{parasitic} \quad (7)$$

The parasitic capacitance is constituted by pin input capacitance and PCB stray capacitance. Total parasitic capacitance is typically 2.5 pF.

The crystal oscillator is amplitude regulated. This means that a high current is used to start up the oscillations. When the amplitude builds up, the current is reduced to what is necessary to maintain approximately 0.4 Vpp signal swing. This ensures a fast start-up, and keeps the drive level to a minimum. The ESR of the crystal should be within the specification in order to ensure a reliable start-up (see Section 4.7).

The initial tolerance, temperature drift, aging and load pulling should be carefully specified in order to meet the required frequency accuracy in a certain application.

Avoid routing digital signals with sharp edges close to XOSC_Q1 PCB track or underneath the crystal dc operating point and result in duty cycle variation.

For compliance with modulation bandwidth requirements under EN 300 220 V2.3.1 in the 863 to 870 MHz frequency range it is recommended to use a 26 MHz crystal for frequencies below 869 MHz and a 27 MHz crystal for frequencies above 869 MHz.

6.4 Reference Signal

The chip can alternatively be operated with a reference signal from 26 to 27 MHz instead of a crystal. This input clock can either be a full- swing digital signal (0 V to VDD) or a sine wave of maximum 1 V peak-peak amplitude. The reference signal must be connected to the XOSC_Q1 input. The sine wave must be connected to XOSC_Q1 using a serial capacitor. When using a full-swing digital signal, this capacitor can be omitted. The XOSC_Q2 line must be left un-connected. C81 and C101 can be omitted when using a reference signal.

6.5 Additional Filtering

In the 868/915 MHz reference design SWRR082, C127 and L125 together with C126 build an optional filter to reduce emission at carrier frequency - 169 MHz. This filter is necessary for applications with an external antenna connector that seek compliance with ETSI EN 300 220 V2.3.1. For more information, see DN017 SWRA168. If this filtering is not necessary, C126 will work as a DC block (only necessary if there is a DC path in the antenna). C127 and L125 should in that case be left unmounted.

Additional external components (that is, an RF SAW filter) may be used in order to improve the performance in specific applications.

6.6 Power Supply Decoupling

The power supply must be properly decoupled close to the supply pins. Note that decoupling capacitors are not shown in the application circuit. The placement and the size of the decoupling capacitors are very important to achieve the optimum performance (SWRR081 and SWRR082 should be followed closely).

Copyright © 2011–2014, Texas Instruments Incorporated

6.7 PCB Layout Recommendations

The top layer should be used for signal routing, and the open areas should be filled with metallization connected to ground using several vias.

The area under the chip is used for grounding and shall be connected to the bottom ground plane with several vias for good thermal performance and sufficiently low inductance to ground.

In SWRR081 and SWRR082, 5 vias are placed inside the exposed die attached pad. These vias should be “tented” (covered with solder mask) on the component side of the PCB to avoid migration of solder through the vias during the solder reflow process.

The solder paste coverage should not be 100%. If it is, out gassing may occur during the reflow process, which may cause defects (splattering, solder balling). Using “tented” vias reduces the solder paste coverage below 100%. See Figure 6-3 for top solder resist and top paste masks.

Each decoupling capacitor should be placed as close as possible to the supply pin it is supposed to decouple. Each decoupling capacitor should be connected to the power line (or power plane) by separate vias. The best routing is from the power line (or power plane) to the decoupling capacitor and then to the CC115L supply pin. Supply power filtering is very important.

Each decoupling capacitor ground pad should be connected to the ground plane by separate vias. Direct connections between neighboring power pins will increase noise coupling and should be avoided unless absolutely necessary. Routing in the ground plane underneath the chip or the balun/RF matching circuit, or between the chip's ground vias and the decoupling capacitor's ground vias should be avoided. This improves the grounding and ensures the shortest possible current return path.

Avoid routing digital signals with sharp edges close to XOSC_Q1 PCB track or underneath the crystal Q1 pad as this may shift the crystal dc operating point and result in duty cycle variation.

The external components should ideally be as small as possible (0402 is recommended) and surface mount devices are highly recommended. Components with different sizes than those specified may have differing characteristics.

Precaution should be used when placing the microcontroller in order to avoid noise interfering with the RF circuitry.

A CC11xL Development Kit with a fully assembled CC115L Evaluation Module is available. It is strongly advised that this reference layout is followed very closely in order to get the best performance. The schematic, BOM and layout Gerber files are all available from the TI website (SWRR081 and SWRR082).

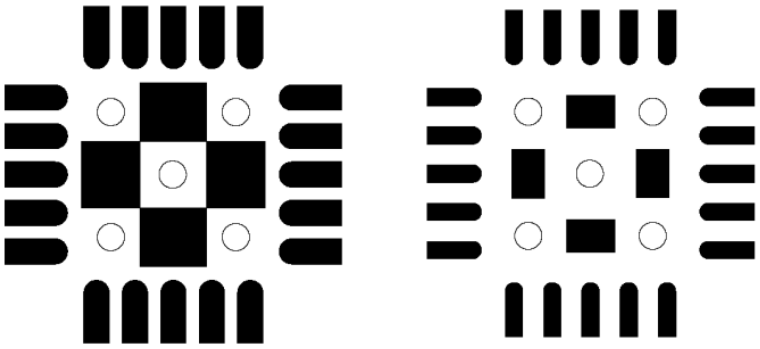

Figure 6-3. Left: Top Solder Resist Mask (Negative) – Right: Top Paste Mask. Circles are Vias

7 Device and Documentation Support

7.1 Device Support

7.1.1 Device Nomenclature

To designate the stages in the product development cycle, TI assigns prefixes to the part numbers of all microprocessors (MPUs) and support tools. Each device has one of three prefixes: X, P, or null (no prefix) (for example, *CC115L*). Texas Instruments recommends two of three possible prefix designators for its support tools: TMDX and TMDS. These prefixes represent evolutionary stages of product development from engineering prototypes (TMDX) through fully qualified production devices and tools (TMDS).

Device development evolutionary flow:

X Experimental device that is not necessarily representative of the final device's electrical specifications and may not use production assembly flow.

P Prototype device that is not necessarily the final silicon die and may not necessarily meet final electrical specifications.

null Production version of the silicon die that is fully qualified.

Support tool development evolutionary flow:

TMDX Development-support product that has not yet completed Texas Instruments internal qualification testing.

TMDS Fully-qualified development-support product.

X and P devices and TMDX development-support tools are shipped against the following disclaimer:

"Developmental product is intended for internal evaluation purposes."

Production devices and TMDS development-support tools have been characterized fully, and the quality and reliability of the device have been demonstrated fully. TI's standard warranty applies.

Predictions show that prototype devices (X or P) have a greater failure rate than the standard production devices. Texas Instruments recommends that these devices not be used in any production system because their expected end-use failure rate still is undefined. Only qualified production devices are to be used.

TI device nomenclature also includes a suffix with the device family name. This suffix indicates the package type (for example, *RGP*) and the temperature range (for example, blank is the default commercial temperature range).

For orderable part numbers of *CC115L* devices in the *QFN* package types, see the Package Option Addendum of this document, the TI website (www.ti.com), or contact your TI sales representative.

Copyright © 2011–2014, Texas Instruments Incorporated

7.2 Documentation Support

7.2.1 Related Documentation from Texas Instruments

The following documents describe the *CC115L* transmitter. Copies of these documents are available on the Internet at www.ti.com.

SWRR046 Characterization Design 315 - 433 MHz (Identical to the CC1101EM 315 - 433 MHz Reference Design)

SWRR045 Characterization Design 868 - 915 MHz (Identical to the CC1101EM 868 - 915 MHz Reference Design)

SWRZ036 CC115L Errata Notes

SWRC176 SmartRF Studio

SWRA168 DN017 CC11xx 868/915 MHz RF Matching

SWRA123 DN006 CC11xx Settings for FCC 15.247 Solutions

SWRA168 DN013 Programming Output Power on CC1101

SWRS089 CC1190 Data Sheet

SWRA346 DN032 Options for Cost Optimized CC11xx Matching

SWRR081 CC110LEM / CC115LEM 433 MHz Reference Design

SWRR082 CC110LEM / CC115LEM 868 - 915 MHz Reference Design

7.2.2 Community Resources

The following links connect to TI community resources. Linked contents are provided "AS IS" by the respective contributors. They do not constitute TI specifications and do not necessarily reflect TI's views; see TI's Terms of Use.

TI E2E™ Online Community ***TI's Engineer-to-Engineer (E2E) Community.*** Created to foster collaboration among engineers. At e2e.ti.com, you can ask questions, share knowledge, explore ideas and help solve problems with fellow engineers.

TI Embedded Processors Wiki ***Texas Instruments Embedded Processors Wiki.*** Established to help developers get started with Embedded Processors from Texas Instruments and to foster innovation and growth of general knowledge about the hardware and software surrounding these devices.

7.3 Trademarks

E2E is a trademark of Texas Instruments.
All other trademarks are the property of their respective owners.

Copyright © 2011–2014, Texas Instruments Incorporated

7.4 Electrostatic Discharge Caution



This integrated circuit can be damaged by ESD. Texas Instruments recommends that all integrated circuits be handled with appropriate precautions. Failure to observe proper handling and installation procedures can cause damage.

ESD damage can range from subtle performance degradation to complete device failure. Precision integrated circuits may be more susceptible to damage because very small parametric changes could cause the device not to meet its published specifications.

7.5 Export Control Notice

Recipient agrees to not knowingly export or re-export, directly or indirectly, any product or technical data (as defined by the U.S., EU, and other Export Administration Regulations) including software, or any controlled product restricted by other applicable national regulations, received from Disclosing party under this Agreement, or any direct product of such technology, to any destination to which such export or re-export is restricted or prohibited by U.S. or other applicable laws, without obtaining prior authorization from U.S. Department of Commerce and other competent Government authorities to the extent required by those laws.

7.6 Glossary

SLYZ022 — *TI Glossary*.

This glossary lists and explains terms, acronyms and definitions.

7.7 Additional Acronyms

Additional acronyms used in this data sheet are described below.

2-FSK	Binary Frequency Shift Keying
4-FSK	Quaternary Frequency Shift Keying
ADC	Analog to Digital Converter
AMR	Automatic Meter Reading
BOM	Bill of Material
BT	Bandwidth-Time product
CFR	Code of Federal Regulations
CRC	Cyclic Redundancy Check
CW	Continuous Wave (Unmodulated Carrier)
DC	Direct Current
ESR	Equivalent Series Resistance
FCC	Federal Communications Commission
FIFO	First-In-First-Out
FS	Frequency Synthesizer
GFSK	Gaussian shaped Frequency Shift Keying
IF	Intermediate Frequency
I/Q	In-Phase/Quadrature
ISM	Industrial, Scientific, Medical
LC	Inductor-Capacitor
LO	Local Oscillator
LSB	Least Significant Bit
MCU	Microcontroller Unit

Copyright © 2011–2014, Texas Instruments Incorporated

MSB	Most Significant Bit
N/A	Not Applicable
NRZ	Non Return to Zero (Coding)
OOK	On-Off Keying
PA	Power Amplifier
PCB	Printed Circuit Board
PD	Power Down
PER	Packet Error Rate
PLL	Phase Locked Loop
POR	Power-On Reset
QLP	Quad Leadless Package
QPSK	Quadrature Phase Shift Keying
RC	Resistor-Capacitor
RF	Radio Frequency
SPI	Serial Peripheral Interface
SRD	Short Range Devices
TX	Transmit, Transmit Mode
VCO	Voltage Controlled Oscillator
XOSC	Crystal Oscillator
XTAL	Crystal

Copyright © 2011–2014, Texas Instruments Incorporated

8 Mechanical Packaging and Orderable Information

8.1 Packaging Information

The following pages include mechanical packaging and orderable information. This information is the most current data available for the designated devices. This data is subject to change without notice and revision of this document. For browser-based versions of this data sheet, refer to the left-hand navigation.

Copyright © 2011–2014, Texas Instruments Incorporated

PACKAGING INFORMATION

Orderable Device	Status (1)	Package Type	Package Drawing	Pins	Package Qty	Eco Plan (2)	Lead/Ball Finish (6)	MSL Peak Temp (3)	Op Temp (°C)	Device Marking (4/5)	Samples
CC115LRGPR	ACTIVE	QFN	RGP	20	3000	Green (RoHS & no Sb/Br)	NIPDAU | NIPDAUAG	Level-3-260C-168 HR	-40 to 85	CC115L	Samples
CC115LRGPT	ACTIVE	QFN	RGP	20	250	Green (RoHS & no Sb/Br)	NIPDAU | NIPDAUAG	Level-3-260C-168 HR	-40 to 85	CC115L	Samples

(1) The marketing status values are defined as follows:
ACTIVE: Product device recommended for new designs.
LIFEBUY: TI has announced that the device will be discontinued, and a lifetime-buy period is in effect.
NRND: Not recommended for new designs. Device is in production to support existing customers, but TI does not recommend using this part in a new design.
PREVIEW: Device has been announced but is not in production. Samples may or may not be available.
OBSOLETE: TI has discontinued the production of the device.

(2) **RoHS:** TI defines "RoHS" to mean semiconductor products that are compliant with the current EU RoHS requirements for all 10 RoHS substances, including the requirement that RoHS substance do not exceed 0.1% by weight in homogeneous materials. Where designed to be soldered at high temperatures, "RoHS" products are suitable for use in specified lead-free processes. TI may reference these types of products as "Pb-Free".
RoHS Exempt: TI defines "RoHS Exempt" to mean products that contain lead but are compliant with EU RoHS pursuant to a specific EU RoHS exemption.
Green: TI defines "Green" to mean the content of Chlorine (Cl) and Bromine (Br) based flame retardants meet JS709B low halogen requirements of <=1000ppm threshold. Antimony trioxide based flame retardants must also meet the <=1000ppm threshold requirement.

(3) MSL, Peak Temp. - The Moisture Sensitivity Level rating according to the JEDEC industry standard classifications, and peak solder temperature.

(4) There may be additional marking, which relates to the logo, the lot trace code information, or the environmental category on the device.

(5) Multiple Device Markings will be inside parentheses. Only one Device Marking contained in parentheses and separated by a "~" will appear on a device. If a line is indented then it is a continuation of the previous line and the two combined represent the entire Device Marking for that device.

(6) Lead/Ball Finish - Orderable Devices may have multiple material finish options. Finish options are separated by a vertical ruled line. Lead/Ball Finish values may wrap to two lines if the finish value exceeds the maximum column width.

Important Information and Disclaimer: The information provided on this page represents TI's knowledge and belief as of the date that it is provided. TI bases its knowledge and belief on information provided by third parties, and makes no representation or warranty as to the accuracy of such information. Efforts are underway to better integrate information from third parties. TI has taken and continues to take reasonable steps to provide representative and accurate information but may not have conducted destructive testing or chemical analysis on incoming materials and chemicals. TI and TI suppliers consider certain information to be proprietary, and thus CAS numbers and other limited information may not be available for release.

In no event shall TI's liability arising out of such information exceed the total purchase price of the TI part(s) at issue in this document sold by TI to Customer on an annual basis.

TAPE AND REEL INFORMATION

REEL DIMENSIONS

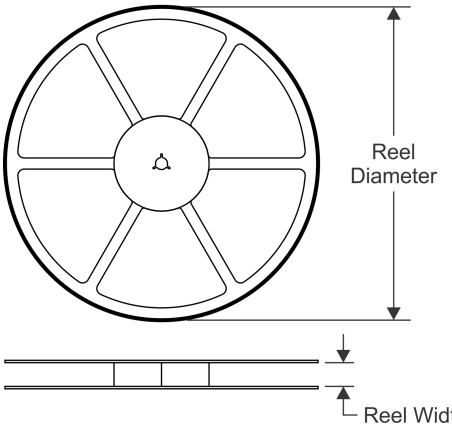

TAPE DIMENSIONS

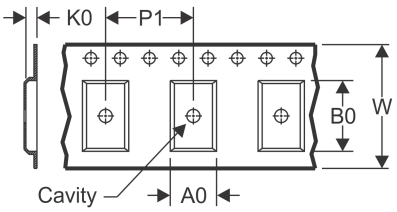

A0	Dimension designed to accommodate the component width
B0	Dimension designed to accommodate the component length
K0	Dimension designed to accommodate the component thickness
W	Overall width of the carrier tape
P1	Pitch between successive cavity centers

QUADRANT ASSIGNMENTS FOR PIN 1 ORIENTATION IN TAPE

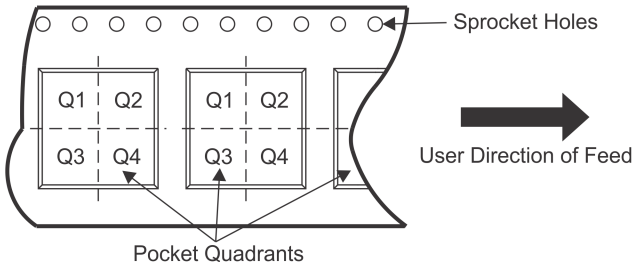

*All dimensions are nominal

Device	Package Type	Package Drawing	Pins	SPQ	Reel Diameter (mm)	Reel Width W1 (mm)	A0 (mm)	B0 (mm)	K0 (mm)	P1 (mm)	W (mm)	Pin1 Quadrant
CC115LRGPR	QFN	RGP	20	3000	330.0	12.4	4.3	4.3	1.5	8.0	12.0	Q2
CC115LRGPT	QFN	RGP	20	250	180.0	12.4	4.3	4.3	1.5	8.0	12.0	Q2

TAPE AND REEL BOX DIMENSIONS

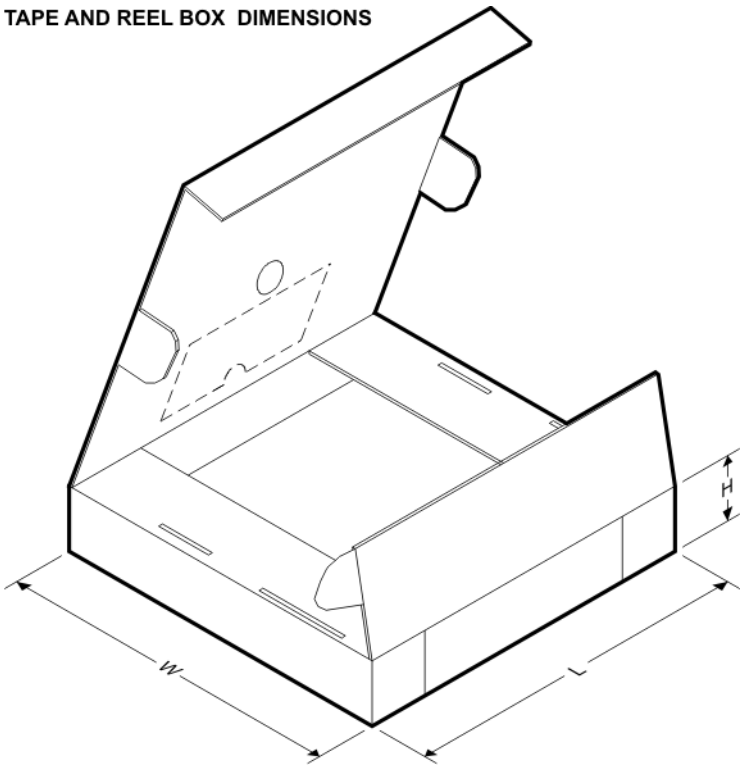

*All dimensions are nominal

Device	Package Type	Package Drawing	Pins	SPQ	Length (mm)	Width (mm)	Height (mm)
CC115LRGPR	QFN	RGP	20	3000	350.0	350.0	43.0
CC115LRGPT	QFN	RGP	20	250	210.0	185.0	35.0

RGP (S–PVQFN–N20) PLASTIC QUAD FLATPACK NO–LEAD

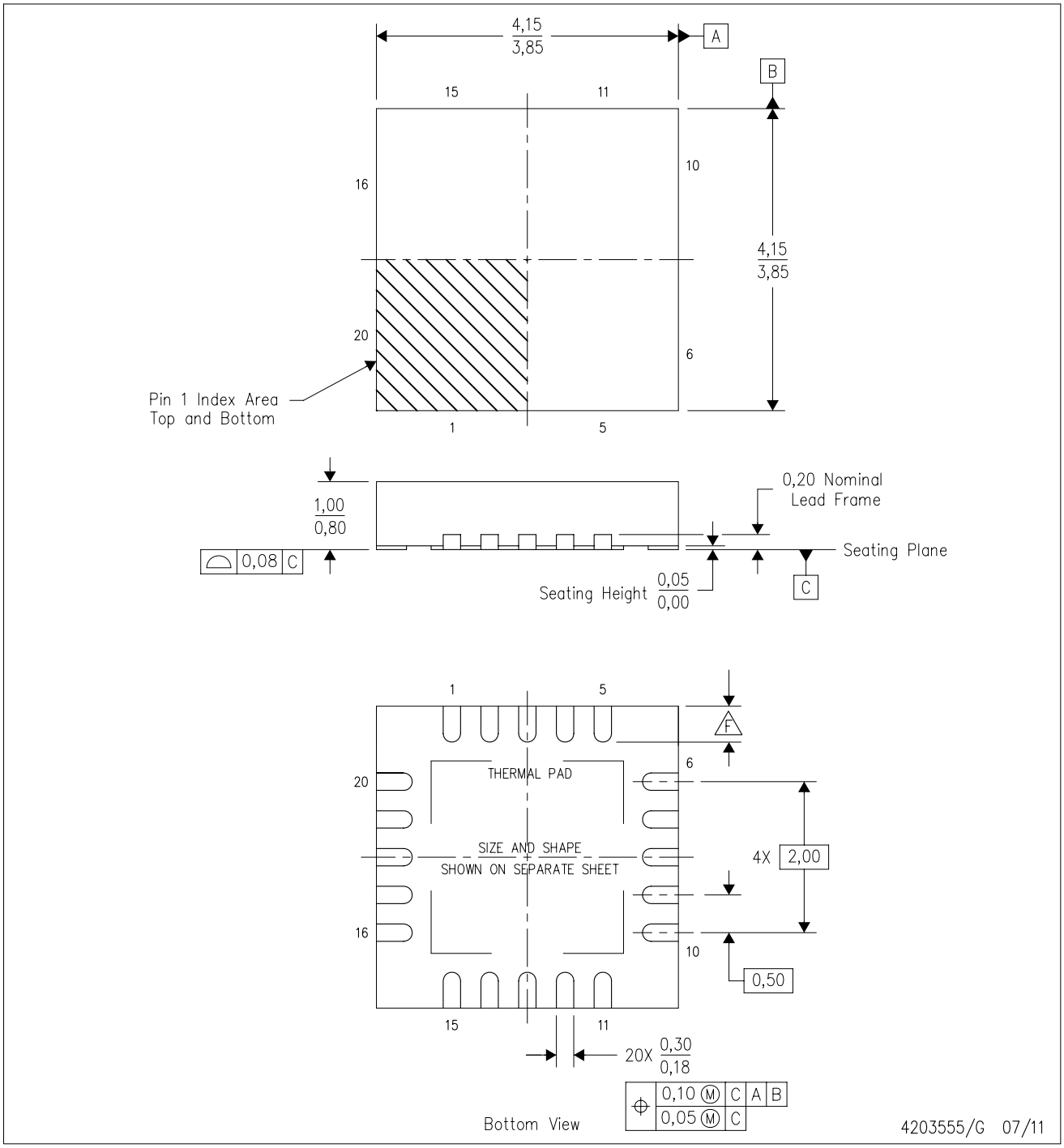

NOTES:
A. All linear dimensions are in millimeters. Dimensioning and tolerancing per ASME Y14.5M–1994.
B. This drawing is subject to change without notice.
C. QFN (Quad Flatpack No–Lead) package configuration.
D. The package thermal pad must be soldered to the board for thermal and mechanical performance.
E. See the additional figure in the Product Data Sheet for details regarding the exposed thermal pad features and dimensions.
F. Check thermal pad mechanical drawing in the product datasheet for nominal lead length dimensions.

RGP (S–PVQFN–N20) PLASTIC QUAD FLATPACK NO–LEAD

THERMAL INFORMATION

This package incorporates an exposed thermal pad that is designed to be attached directly to an external heatsink. The thermal pad must be soldered directly to the printed circuit board (PCB). After soldering, the PCB can be used as a heatsink. In addition, through the use of thermal vias, the thermal pad can be attached directly to the appropriate copper plane shown in the electrical schematic for the device, or alternatively, can be attached to a special heatsink structure designed into the PCB. This design optimizes the heat transfer from the integrated circuit (IC).

For information on the Quad Flatpack No–Lead (QFN) package and its advantages, refer to Application Report, QFN/SON PCB Attachment, Texas Instruments Literature No. SLUA271. This document is available at www.ti.com.

The exposed thermal pad dimensions for this package are shown in the following illustration.

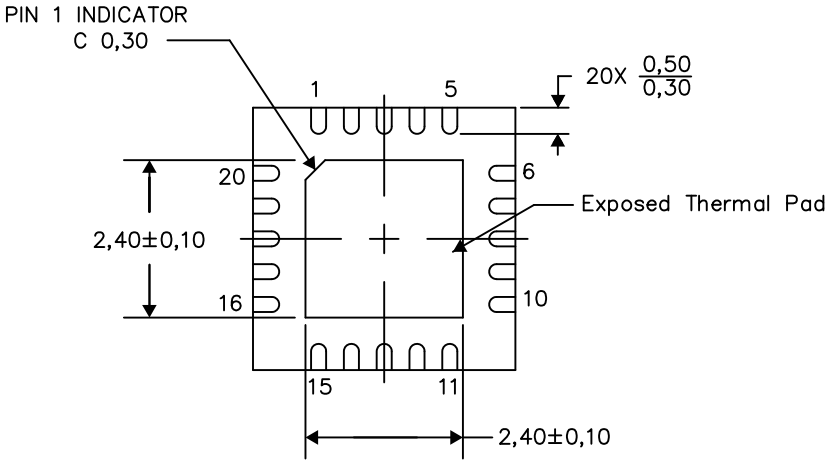

Bottom View

Exposed Thermal Pad Dimensions

4206346–7/AA 11/13

NOTES: A. All linear dimensions are in millimeters

IMPORTANT NOTICE AND DISCLAIMER

TI PROVIDES TECHNICAL AND RELIABILITY DATA (INCLUDING DATASHEETS), DESIGN RESOURCES (INCLUDING REFERENCE DESIGNS), APPLICATION OR OTHER DESIGN ADVICE, WEB TOOLS, SAFETY INFORMATION, AND OTHER RESOURCES “AS IS” AND WITH ALL FAULTS, AND DISCLAIMS ALL WARRANTIES, EXPRESS AND IMPLIED, INCLUDING WITHOUT LIMITATION ANY IMPLIED WARRANTIES OF MERCHANTABILITY, FITNESS FOR A PARTICULAR PURPOSE OR NON-INFRINGEMENT OF THIRD PARTY INTELLECTUAL PROPERTY RIGHTS.

These resources are intended for skilled developers designing with TI products. You are solely responsible for (1) selecting the appropriate TI products for your application, (2) designing, validating and testing your application, and (3) ensuring your application meets applicable standards, and any other safety, security, or other requirements. These resources are subject to change without notice. TI grants you permission to use these resources only for development of an application that uses the TI products described in the resource. Other reproduction and display of these resources is prohibited. No license is granted to any other TI intellectual property right or to any third party intellectual property right. TI disclaims responsibility for, and you will fully indemnify TI and its representatives against, any claims, damages, costs, losses, and liabilities arising out of your use of these resources.

TI’s products are provided subject to TI’s Terms of Sale (www.ti.com/legal/termsofsale.html) or other applicable terms available either on ti.com or provided in conjunction with such TI products. TI’s provision of these resources does not expand or otherwise alter TI’s applicable warranties or warranty disclaimers for TI products.

Mailing Address: Texas Instruments, Post Office Box 655303, Dallas, Texas 75265
Copyright © 2020, Texas Instruments Incorporated