FEATURES

- Single-Supply Operation from +3V ~ +24V
- Dual-Supply Operation from 1.5V ~ 12V
- Gain-Bandwidth Product: 1MHz (Typ.)
- Low Input Bias Current: 45nA ±(Typ.)
- Low Offset Voltage: 5mV (Max.)
- Quiescent Current: 250μA per Amplifier (Typ.)
- Operating Temperature: -25°C ~ +80°C
- Small Package:

  CBMLM321 Available in SOT23-5 SC70-5 Packages

  CBMLM358 Available in SOP-8 and MSOP-8 Packages

  CBMLM324 Available in SOP-14 Package

DESCRIPTION

The CBMLM358 family have a high gain-bandwidth product of 1MHz, a slew rate of 0.4V/μs, and a quiescent current of 250μA/amplifier at 5V. The CBMLM358 family is designed to provide optimal performance in low voltage and low noise systems.

The maximum input offset voltage is 5mV for CBMLM358 family. The operating range iμs from 3V to 24V. The CBMLM321 single is availμable in Green SOT-23-5 packages. The CBMLM358 Dual is available in Green SOP-8 and MSOP-8 packages. The CBMLM324 Quad is available in Green SOP-14 package.

APPLICATIONS

- Walkie-Talkie
- Battery Management Solution
- Transducer Amplifiers
- Summing Amplifiers
- Multivibrators
- Oscillators
- Portable Systems

Download from alldatasheet.com

PIN CONFIGURATIONS

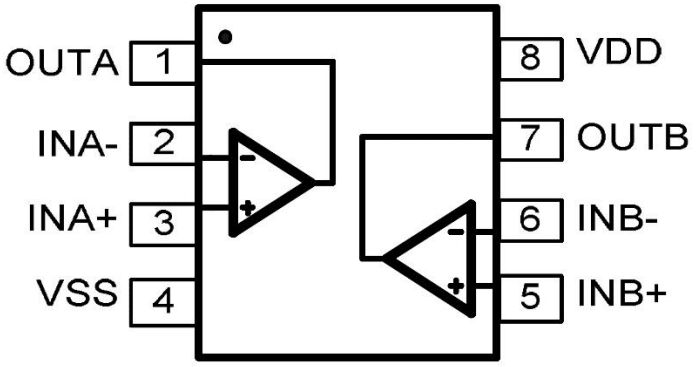

SOP-8/MSOP-8

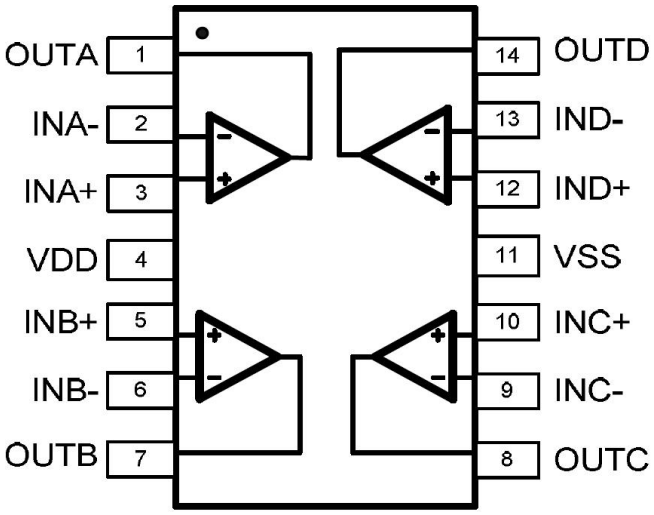

SOP14

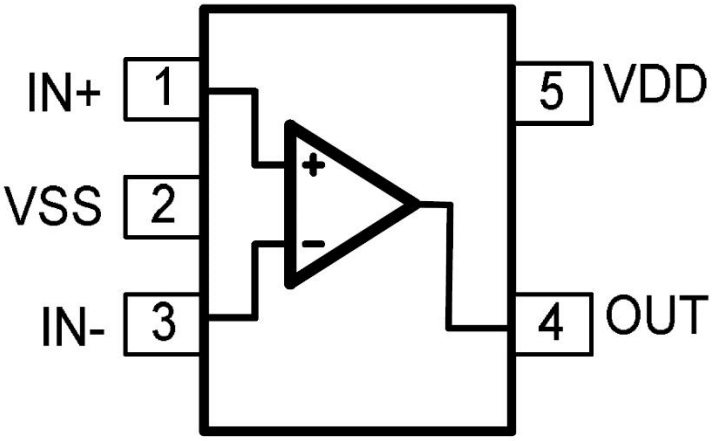

SOT23-5

Download from alldatasheet.com

ABSOLUTE MAXIMUM RATINGS

Condition	Symbol	Max
Power Supply Voltage	V_{CC}	±12V or 24V
Differential input voltage	$V_{I(DIFF)}$	24V
Input Voltage	V_I	-0.3V~24V
Operating Temperature Range	Topr	-25℃ ~+80℃
Storage Temperature Range	Tstg	-65℃ ~+150℃

Note: Stress greater than those listed under Absolute Maximum Ratings may cause permanent damage to the device. This is a stress rating only and functional operation of the device at these or any other conditions outside those indicated in the operational sections of this specification are not implied. Exposure to absolute maximum rating conditions for extended periods may affect reliability.

ESD SENSITIVITY CAUTION

ESD damage can range from subtle performance degradation to complete device failure. Precision integrated circuits may be more susceptible to damage because very small parametric changes could cause the device not to meet its published specifications.

Download from alldatasheet.com

ELECTRICAL CHARACTERISTICS

(At V_S = +15V, T_A=25℃, unless otherwise noted.)

PARAMETER	SYMBOL	CONDITIONS	CBMLM321/CBMLM358/CBMLM324			
			TYP	MIN/MAX OVER TEMPERATURE		
			+25℃	+25℃	UNITS	MIN/MAX
INPUT CHARACTERISTICS						
Input Offset Voltage	V_{OS}	V_{CM} = V_S/2	0.4	5	mV	MAX
Input Bias Current	I_B		44		nA	TYP
Input Offset Current	I_{OS}		3		nA	TYP
Common-Mode Voltage Range	V_{CM}	V_S = 5.5V	-0.1 to +4		V	TYP
Common-Mode Rejection Ratio	CMRR	V_{CM} = 0V to V_S-1.5V	90	70	dB	MIN
Open-Loop Voltage Gain	A_{OL}	R_L = 5kΩ,V_O = 1V to 11V	100	90	dB	MIN
Input Offset Voltage Drift	$\Delta V_{OS}/\Delta_T$		7		μV/℃	TYP
OUTPUT CHARACTERISTICS						
Output Voltage Swing from Rail	V_{OH}	R_L = 2kΩ	11		V	MIN
	V_{OL}	R_L = 2kΩ	5	20	mV	MAX
	V_{OH}	R_L = 10kΩ	12	13	V	MIN
	V_{OL}	R_L = 10kΩ	5	20	mV	MAX
Output Current	I_{SOURCE}	RL = 10Ω to V_S/2	40	60	mA	MAX
	I_{SINK}		40	60		
POWER SUPPLY						
Operating Voltage Range				3	V	MIN
				24	V	MAX
Power Supply Rejection Ratio	PSRR	V_S = +5V to +30V, V_{CM} = +0.5V	100	75	dB	MIN
Quiescent Current / Amplifier	I_Q		250	400	μA	MAX
DYNAMIC PERFORMANCE						
Gain-Bandwidth Product	GBP		1		MHz	TYP
Slew Rate	SR	G = +1, 2V Output Step	0.4		V/μs	TYP

Download from alldatasheet.com

TYPICAL CHARACTERISTICS

Fig.1 Input Voltage Range

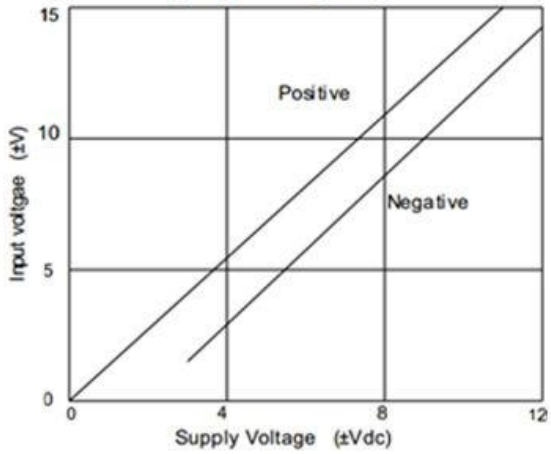

Fig.2 Input Current

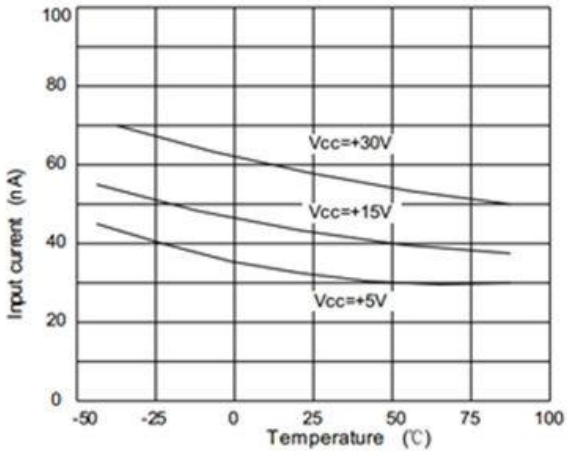

Fig.3 Supply Current

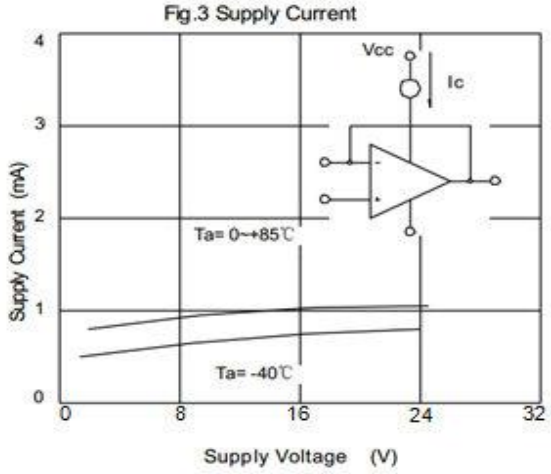

Fig.4 Voltage Gain

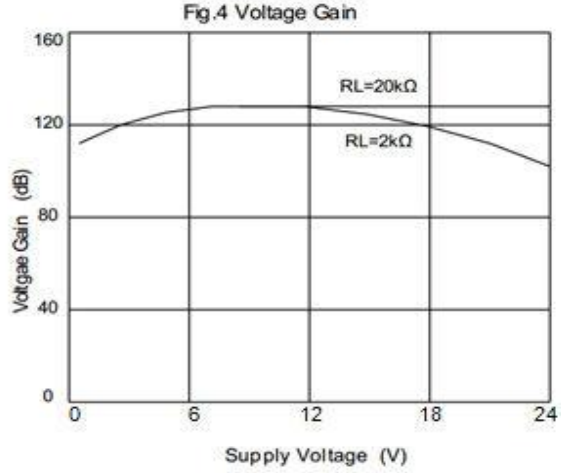

Fig.5 Open Loop Frequency response

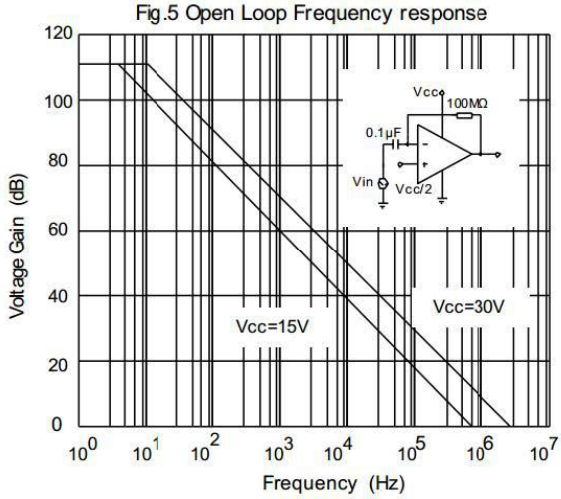

Fig.6 Common-mode rejection Ratio

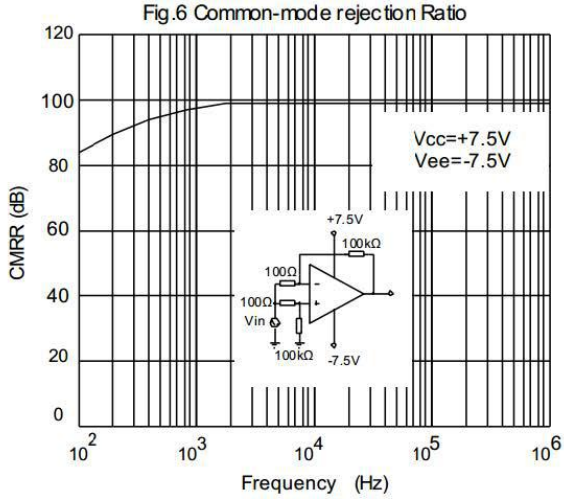

Download from alldatasheet.com

Fig.7

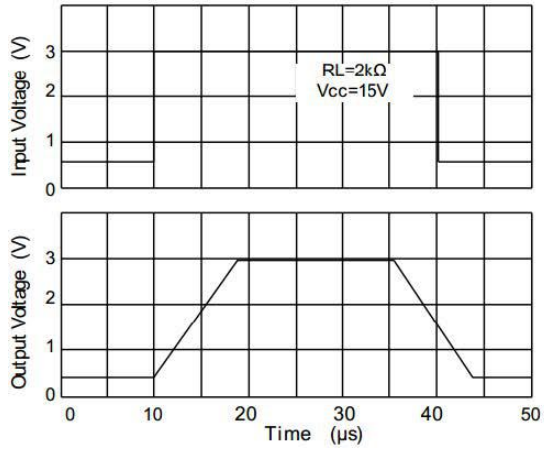

Fig.8 voltage Follower pulse response (small signal)

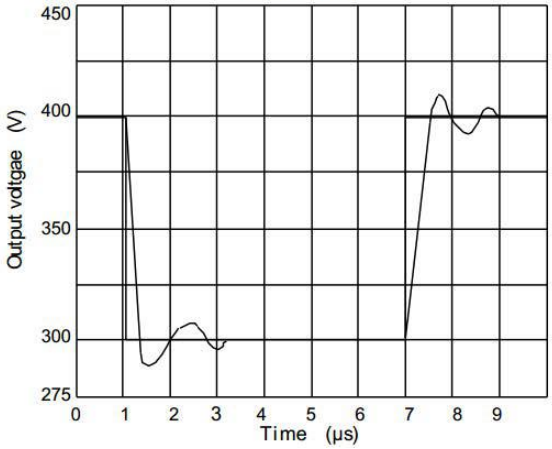

Fig.9 Large signal Frequency Response

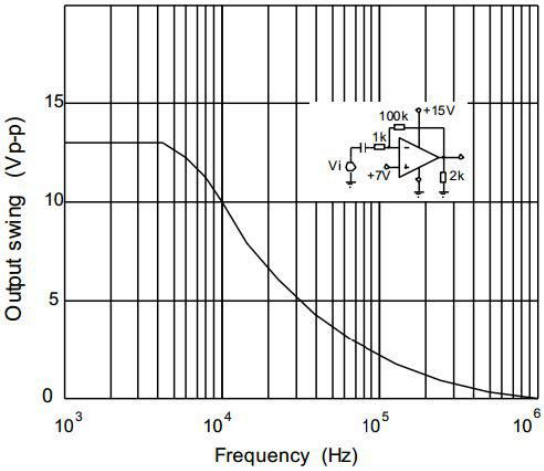

Fig.10 Output Characteristics current sourcing

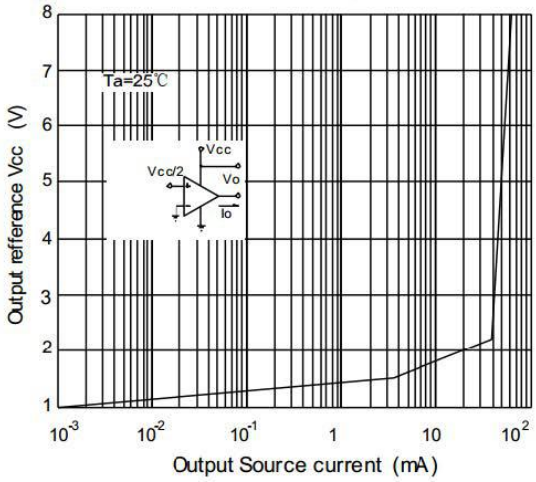

Fig.11 Output Characteristics Current sinking

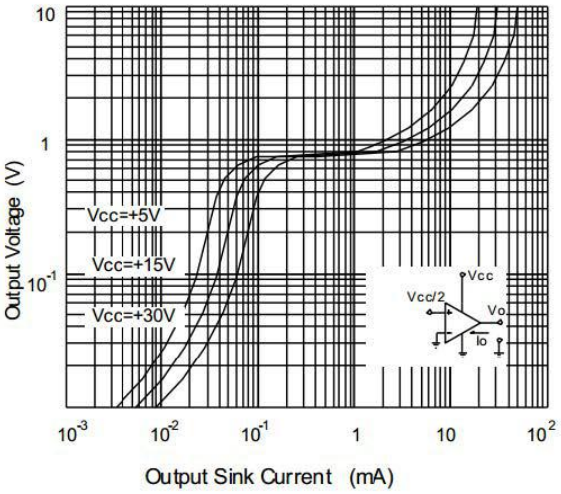

Fig.12 Current Limiting

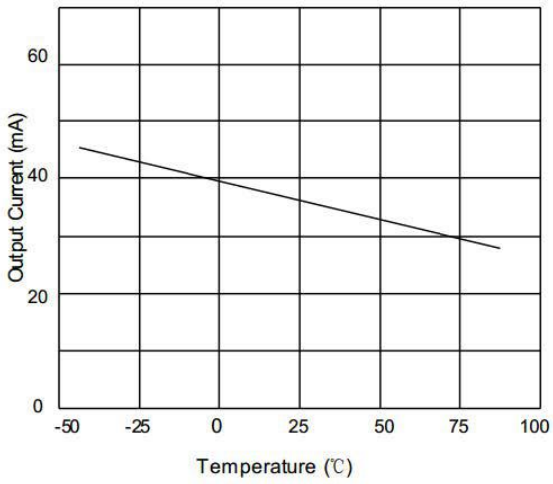

Download from alldatasheet.com

APPLICATION NOTES

Size

CBMLM358 family series op amps are unity-gain stable and suitable for a wide range of general-purpose applications. The small footprints of the CBMLM358 family packages save space on printed circuit boards and enable the design of smaller electronic products.

Power Supply Bypassing and Board Layout

CBMLM358 family series operates from a single 3V to 24V supply or dual ±1.5V to ±12V supplies. For best performance, a 0.1μF ceramic capacitor should be placed close to the V_{DD} pin in single supply operation. For dual supply operation, both V_{DD} and V_{SS} supplies should be bypassed to ground with separate 0.1μF ceramic capacitors.

Low Supply Current

The low supply current (typical 250uA per channel) of CBMLM358 family will help to maximize battery life.

Operating Voltage

CBMLM358 family operates under wide input supply voltage (3V to 24V). In addition, all temperature specifications apply from -25℃ to +80℃. Most behavior remains unchanged throughout the full operating voltage range. These guarantees ensure
operation throughout the single Li-Ion battery lifetime

Capacitive Load Tolerance

The CBMLM358 family is optimized for bandwidth and speed, not for driving capacitive loads. Output capacitance will create a pole in the amplifier's feedback path, leading to excessive peaking and potential oscillation. If dealing with load capacitance is a requirement of the application, the two strategies to consider are (1) using a small resistor in series with the amplifier's output and the load capacitance and (2) reducing the bandwidth of the amplifier's feedback loop by increasing the overall noise gain. Figure 2. shows a unity gain follower using the series resistor strategy. The resistor isolates the output from the capacitance and, more importantly, creates a zero in the feedback path that compensates for the pole created by the output capacitance.

Download from alldatasheet.com

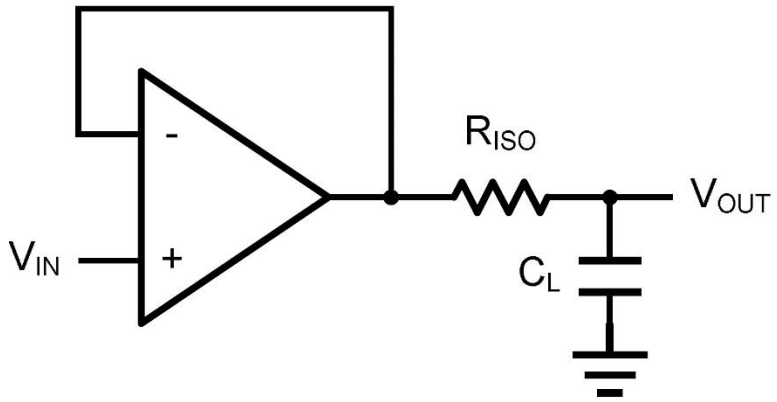

Figure 2. Indirectly Driving a Capacitive Load Using Isolation Resistor

The bigger the R_{ISO} resistor value, the more stable V_{OUT} will be. However, if there is a resistive load R_L in parallel with the capacitive load, a voltage divider (proportional to R_{ISO}/R_L) is formed, this will result in a gain error.

The circuit in Figure 3 is an improvement to the one in Figure 2. R_F provides the DC accuracy by feed-forward the V_{IN} to R_L. C_F and R_{ISO} serve to counteract the loss of phase margin by feeding the high frequency component of the output signal back to the amplifier' s inverting input, thereby preserving the phase margin in the overall feedback loop. Capacitive drive can be increased by increasing the value of C_F. This in turn will slow down the pulse response.

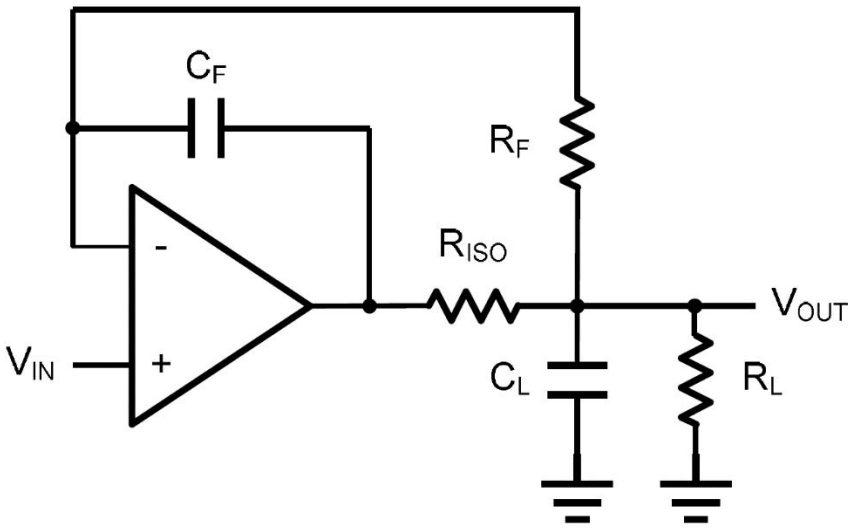

Figure 3. Indirectly Driving a Capacitive Load with DC Accuracy

Download from alldatasheet.com

Typical Application Circuits

Differential amplifier

The differential amplifier allows the subtraction of two input voltages or cancellation of a signal common the two inputs. It is useful as a computational amplifier in making a differential to single-end conversion or in rejecting a common mode signal. Figure 4. shown the differential amplifier using CBMLM358 family.

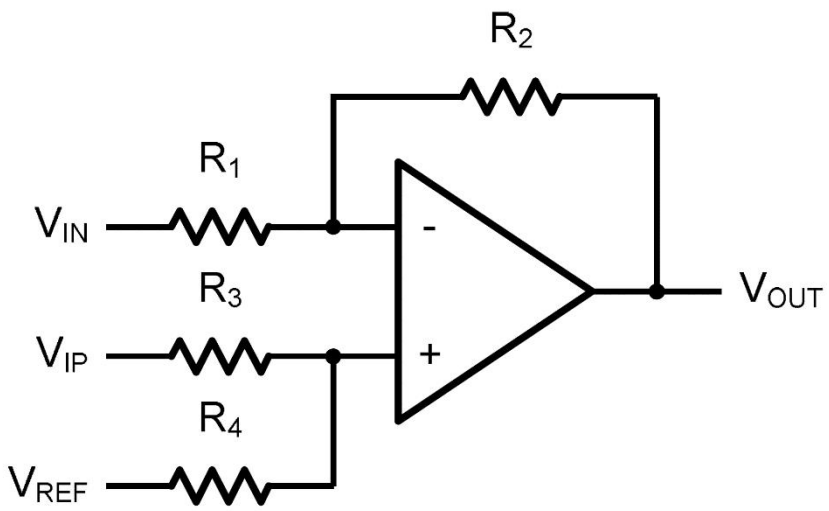

Figure 4. Differential Amplifier

$$V_{OUT} = \left(\frac{R_1 + R_2}{R_3 + R_4}\right)\frac{R_4}{R_1}V_{IN} - \frac{R2}{R1}V_{IP} + \left(\frac{R_1 + R_2}{R_3 + R_4}\right)\frac{R_3}{R_1}V_{REF}$$

If the resistor ratios are equal (i.e. R1=R3 and R2=R4), then

$$V_{OUT} = \frac{R_2}{R_1}(V_{IP} - V_{IN}) + V_{REF}$$

Download from alldatasheet.com

Low Pass Active Filter

The low pass active filter is shown in Figure 5. The DC gain is defined by $-R_2/R_1$. The filter has a -20dB/decade roll-off after its corner frequency $f_C=1/(2\pi R_3C_1)$.

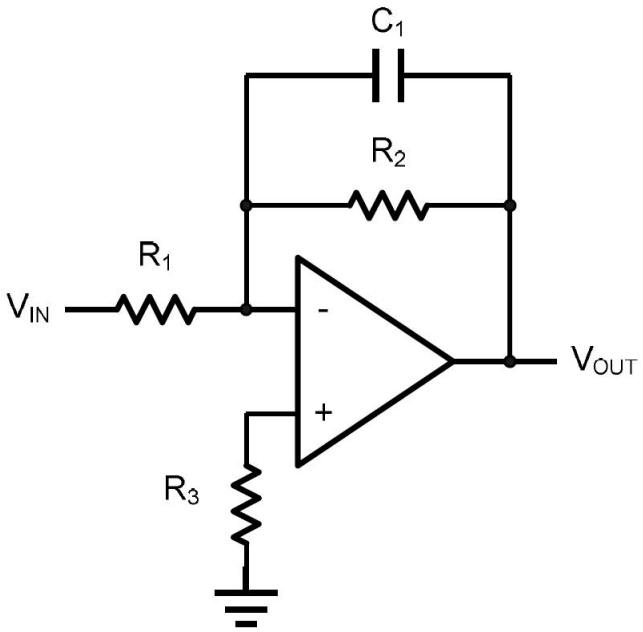

Figure 5. Low Pass Active Filter

Instrumentation Amplifier

The triple CBMLM358 family can be used to build a three-op-amp instrumentation amplifier as shown in Figure 6. The amplifier in Figure 6 is a high input impedance differential amplifier with gain of R2/R1. The two differential voltage followers assure the high input impedance of the amplifier.

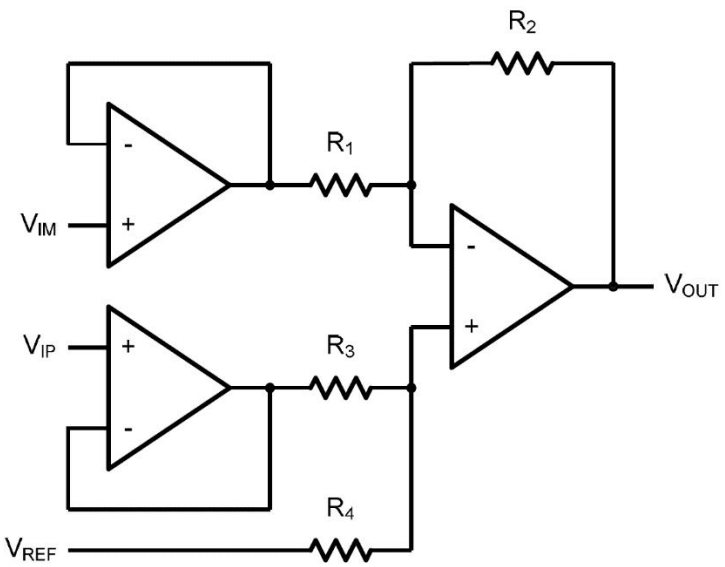

Figure 6. Instrument Amplifier

Download from alldatasheet.com

PACKAGE OUTLINE DIMENSIONS

SOT23-5

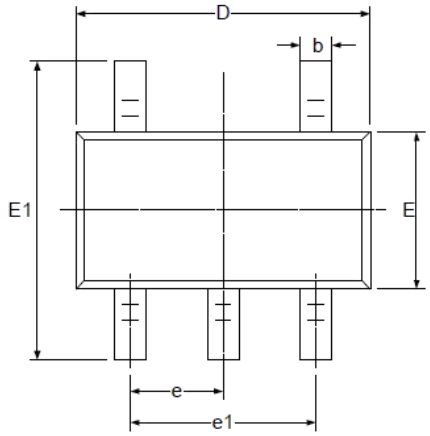

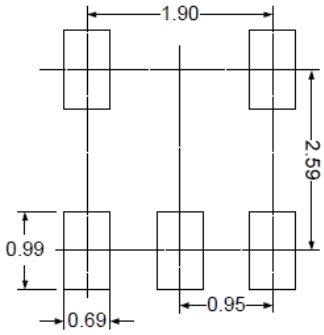

RECOMMENDED LAND PATTERN (Unit: mm)

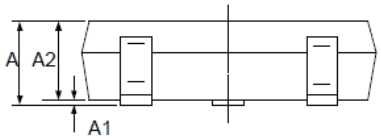

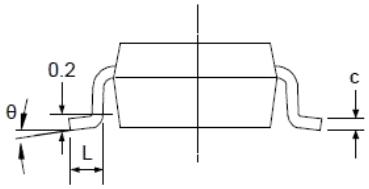

Symbol	Dimensions In Millimeters		Dimensions In Inches	
	MIN	Max	Min	Max
A	1.050	1.250	0.041	0.049
A1	0.000	0.100	0.000	0.004
A2	1.050	1.150	0.041	0.045
b	0.300	0.500	0.012	0.020
c	0.100	0.200	0.004	0.008
D	2.820	3.020	0.111	0.119
E	1.500	1.700	0.059	0.067
E1	2.650	2.950	0.104	0.116
e	0.950 BSC		0.037 BSC	
e1	1.800	2.000	0.071	0.079
L	0.300	0.600	0.012	0.024
θ	0°	8°	0°	8°

Download from alldatasheet.com

MSOP-8

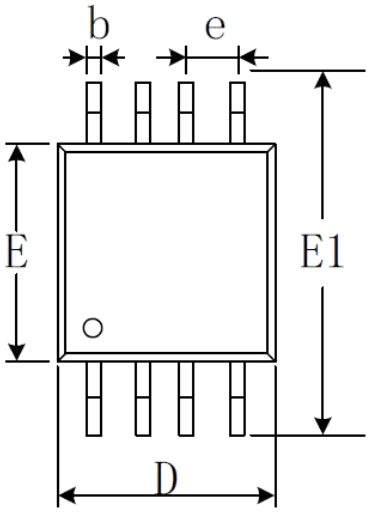

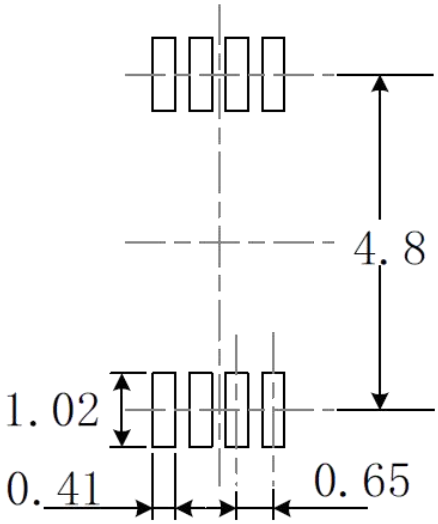

RECOMMENDED LAND PATTERN (Unit: mm)

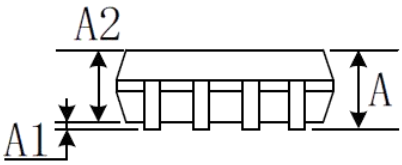

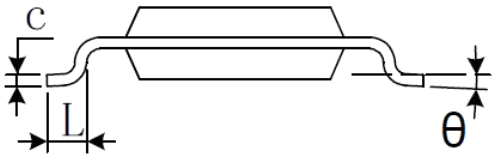

Symbol	Dimensions In Millimeters		Dimensions In Inches	
	MIN	Max	Min	Max
A	0.820	1.100	0.032	0.043
A1	0.020	0.150	0.001	0.006
A2	0.750	0.950	0.030	0.037
b	0.250	0.380	0.010	0.015
c	0.090	0.230	0.004	0.009
D	2.900	3.100	0.114	0.122
E	2.900	3.100	0.114	0.122
E1	4.750	5.050	0.187	0.199
e	0.650 BSC		0.026 BSC	
L	0.400	0.800	0.016	0.031
θ	0°	6°	0°	6°

Download from alldatasheet.com

SOP8

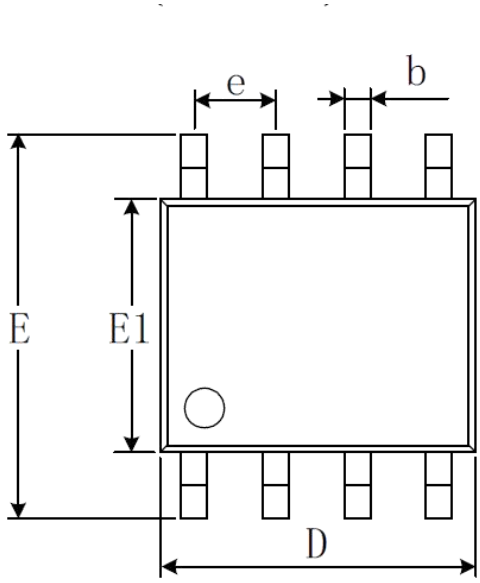

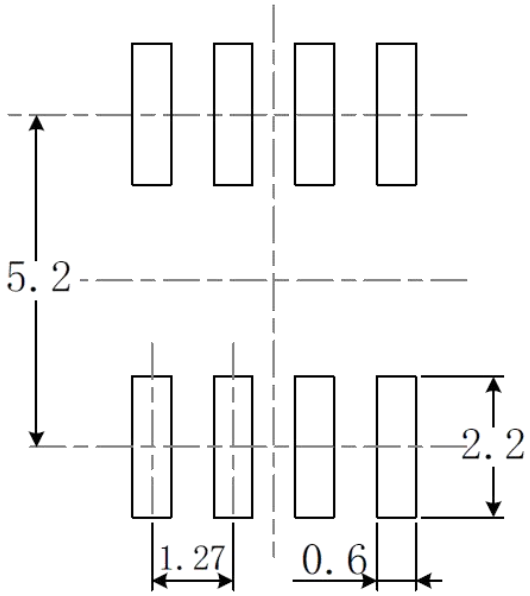

RECOMMENDED LAND PATTERN (Unit: mm)

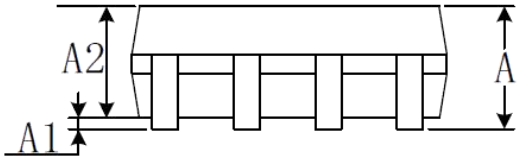

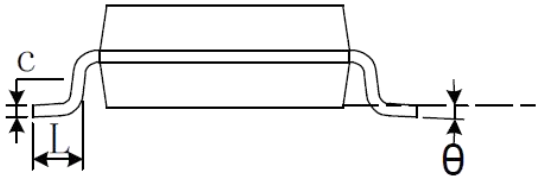

Symbol	Dimensions In Millimeters		Dimensions In Inches	
	MIN	Max	Min	Max
A	1.350	1.750	0.053	0.069
A1	0.100	0.250	0.004	0.010
A2	1.350	1.550	0.053	0.061
b	0.330	0.510	0.013	0.020
c	0.170	0.250	0.06	0.010
D	4.700	5.100	0.185	0.200
E	3.800	4.000	0.150	0.157
E1	5.800	4.200	0.228	0.244
e	1.270 BSC		0.050 BSC	
L	0.400	1.270	0.016	0.050
θ	0°	8°	0°	8°

Download from alldatasheet.com

SOP14

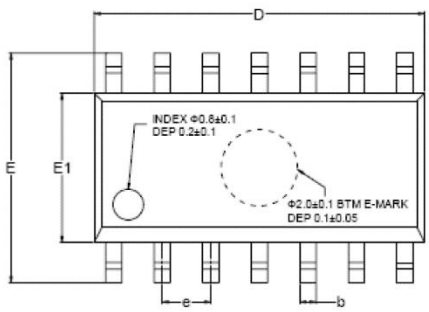

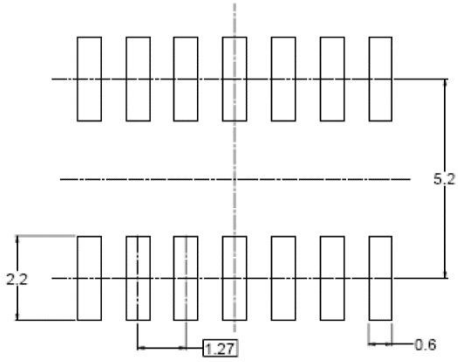

RECOMMENDED LAND PATTERN (Unit: mm)

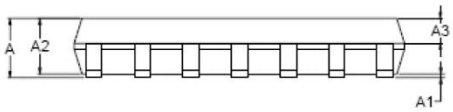

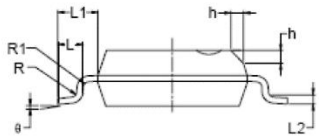

Symbol	Dimensions In Millimeters		Dimensions In Inches	
	MIN	Max	Min	Max
A	1.35	1.75	0.053	0.069
A1	0.10	0.25	0.004	0.010
A2	1.25	1.65	0.049	0.065
A3	0.55	0.75	0.022	0.030
b	0.36	0.49	0.014	0.019
D	8.53	8.73	0.336	0.344
E	5.80	6.20	0.228	0.244
E1	3.80	4.00	0.150	0.157
e	1.28 BSC		0.050 BSC	
L	0.45	4.00	0.150	0.157
L1	1.04 REF		0.040 REF	
L2	0.25 BSC		0.01 BSC	
R	0.07		0.003	
R1	0.07		0.003	
h	0.30	0.50	0.012	0.020
θ	0°	8°	0°	8°

Download from alldatasheet.com

PACKAGE/ORDERING INFORMATION

PRODUCT	ORDERING NUMBER	TEMPRANGE	PACKAGE	PAKEAGE MARKING	TRANSPOT MEDIA,QUANTILY
CBMLM358	CBMLM358AS8	-40℃~125℃	SOP-8	CBM358A	Tape and Reel,2500
	CBMLM358AMS8	-40℃~125℃	MSOP-8	CBM358M	Tape and Reel,3000
CBMLM324	CBMLM324AS14	-40℃~125℃	SOP-14	CBMLM324A	Tape and Reel,2500
CBMLM321	CBMLM321AST5	-40℃~125℃	SOT23-5	321	Tape and Reel,3000
	CBMLM321ASC7	-40℃~125℃	SC70-5	321	Tape and Reel,3000

Download from alldatasheet.com