CAT9554, CAT9554A

8-bit I²C and SMBus I/O Port with Interrupt

ON Semiconductor®

http://onsemi.com

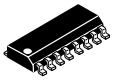

SOIC−16
W SUFFIX
CASE 751BG



TQFN−16
HV4 SUFFIX
CASE 510AE



TSSOP−16
Y SUFFIX
CASE 948AN

Description

The CAT9554 and CAT9554A are CMOS devices that provide 8−bit parallel input/output port expansion for I²C and SMBus compatible applications. These I/O expanders provide a simple solution in applications where additional I/Os are needed: sensors, power switches, LEDs, pushbuttons, and fans.

The CAT9554/9554A consist of an input port register, an output port register, a configuration register, a polarity inversion register and an I²C/SMBus−compatible serial interface.

Any of the eight I/Os can be configured as an input or output by writing to the configuration register. The system master can invert the CAT9554/9554A input data by writing to the active−high polarity inversion register.

The CAT9554/9554A features an active low interrupt output which indicates to the system master that an input state has changed.

The device's extended addressing capability allows up to 8 devices to share the same bus. The CAT9554A is identical to the CAT9554 except the fixed part of the I²C slave address is different. This allows up to 16 of devices (eight CAT9554 and eight CAT9554A) to be connected on the same bus.

Features

- 400 kHz I²C Bus Compatible (Note 1)
- 2.3 V to 5.5 V Operation
- Low Stand−by Current
- 5 V Tolerant I/Os
- 8 I/O Pins that Default to Inputs at Power−up
- High Drive Capability
- Individual I/O Configuration
- Polarity Inversion Register
- Active Low Interrupt Output
- Internal Power−on Reset
- No Glitch on Power−up
- Noise Filter on SDA/SCL Inputs
- Cascadable up to 8 Devices
- Industrial Temperature Range
- 16−lead SOIC and TSSOP, and 16−pad TQFN (4 x 4 mm) Packages
- These Devices are Pb−Free, Halogen Free/BFR Free and are RoHS Compliant

Applications

- White Goods (dishwashers, washing machines)
- Handheld Devices (cell phones, PDAs, digital cameras)
- Data Communications (routers, hubs and servers)

1. All I/Os are set to inputs at RESET.

PIN CONNECTIONS

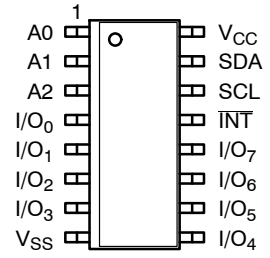

SOIC (W), TSSOP (Y)
(Top View)

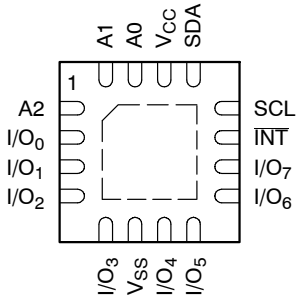

TQFN 4 x 4 mm (HV4)
(Top View)

ORDERING INFORMATION

See detailed ordering and shipping information in the package dimensions section on page 14 of this data sheet.

© Semiconductor Components Industries, LLC, 2011

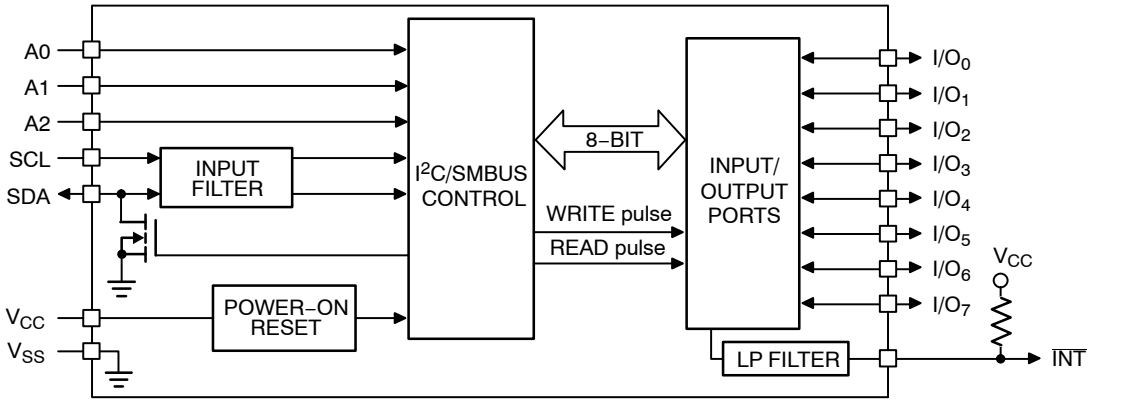

Note: All I/Os are set to inputs at RESET.

Figure 1. Block Diagram

Table 1. PIN DESCRIPTION

SOIC / TSSOP	TQFN	Pin Name	Function
1	15	A0	Address Input 0
2	16	A1	Address Input 1
3	1	A2	Address Input 2
4−7	2−5	I/O_{0-3}	Input/Output Port 0 to Input/Output Port 3
8	6	V_{SS}	Ground
9−12	7−10	I/O_{4-7}	Input/Output Port 4 to Input/Output Port 7
13	11	$\overline{INT}$	Interrupt Output (open drain)
14	12	SCL	Serial Clock
15	13	SDA	Serial Data
16	14	V_{CC}	Power Supply

Table 2. ABSOLUTE MAXIMUM RATINGS

Parameters	Ratings	Units
V_{CC} with Respect to Ground	−0.5 to +6.5	V
Voltage on Any Pin with Respect to Ground	−0.5 to +5.5	V
DC Current on I/O_0 to I/O_7	±50	mA
DC Input Current	±20	mA
V_{CC} Supply Current	85	mA
V_{SS} Supply Current	100	mA
Package Power Dissipation Capability (T_A = 25°C)	1.0	W
Junction Temperature	+150	°C
Storage Temperature	−65 to +150	°C

Stresses exceeding Maximum Ratings may damage the device. Maximum Ratings are stress ratings only. Functional operation above the Recommended Operating Conditions is not implied. Extended exposure to stresses above the Recommended Operating Conditions may affect device reliability.

Table 3. RELIABILITY CHARACTERISTICS

Symbol	Parameter	Reference Test Method	Min	Units
V_{ZAP} (Note 2)	ESD Susceptibility	JEDEC Standard JESD 22	2000	Volts
I_{LTH} (Notes 2, 3)	Latch−up	JEDEC Standard 17	100	mA

2. This parameter is tested initially and after a design or process change that affects the parameter.
3. Latch−up protection is provided for stresses up to 100 mA on address and data pins from −1 V to V_{CC} +1 V.

Table 4. D.C. OPERATING CHARACTERISTICS (V_{CC} = 2.3 to 5.5 V; T_A = −40°C to +85°C, unless otherwise specified.)

Symbol	Parameter	Conditions	Min	Typ	Max	Unit
SUPPLIES						
V_{CC}	Supply voltage		2.3	–	5.5	V
I_{CC}	Supply current	Operating mode; V_{CC} = 5.5 V; no load; f_{SCL} = 100 kHz	–	104	175	μA
I_{stbl}	Standby current	Standby mode; V_{CC} = 5.5 V; no load; $V_I = V_{SS}$; f_{SCL} = 0 kHz; I/O = inputs	–	550	700	μA
I_{stbh}	Standby current	Standby mode; V_{CC} = 5.5 V; no load; $V_I = V_{CC}$; f_{SCL} = 0 kHz; I/O = inputs	–	0.25	1	μA
V_{POR}	Power−on reset voltage	No load; $V_I = V_{CC}$ or V_{SS}	–	1.5	1.65	V
SCL, SDA, $\overline{INT}$						
V_{IL} (Note 4)	Low level input voltage		−0.5	–	0.3 x V_{CC}	V
V_{IH} (Note 4)	High level input voltage		0.7 x V_{CC}	–	5.5	V
I_{OL}	Low level output current	V_{OL} = 0.4 V	3	–	–	mA
I_L	Leakage current	$V_I = V_{CC}$ or V_{SS}	−1	–	+1	μA
C_I (Note 5)	Input capacitance	$V_I = V_{SS}$	–	–	6	pF
C_O (Note 5)	Output capacitance	$V_O = V_{SS}$	–	–	8	pF
A0, A1, A2						
V_{IL} (Note 4)	Low level input voltage		−0.5	–	0.8	V
V_{IH} (Note 4)	High level input voltage		2.0	–	5.5	V
I_{LI}	Input leakage current		−1	–	1	μA
I/Os						
V_{IL}	Low level input voltage		−0.5	–	0.8	V
V_{IH}	High level input voltage		2.0	–	5.5	V
I_{OL}	Low level output current	V_{OL} = 0.5 V; V_{CC} = 2.3 V (Note 6)	8	10	–	mA
		V_{OL} = 0.7 V; V_{CC} = 2.3 V (Note 6)	10	13	–	mA
		V_{OL} = 0.5 V; V_{CC} = 4.5 V (Note 6)	8	17	–	mA
		V_{OL} = 0.7 V; V_{CC} = 4.5 V (Note 6)	10	24	–	mA
		V_{OL} = 0.5 V; V_{CC} = 3.0 V (Note 6)	8	14	–	mA
		V_{OL} = 0.7 V; V_{CC} = 3.0 V (Note 6)	10	19	–	mA
V_{OH}	High level output voltage	I_{OH} = −8 mA; V_{CC} = 2.3 V (Note 7)	1.8	–	–	V
		I_{OH} = −10 mA; V_{CC} = 2.3 V (Note 7)	1.7	–	–	V
		I_{OH} = −8 mA; V_{CC} = 3.0 V (Note 7)	2.6	–	–	V
		I_{OH} = −10 mA; V_{CC} = 3.0 V (Note 7)	2.5	–	–	V
		I_{OH} = −8 mA; V_{CC} = 4.75 V (Note 7)	4.1	–	–	V
		I_{OH} = −10 mA; V_{CC} = 4.75 V (Note 7)	4.0	–	–	V
I_{IH}	Input leakage current	V_{CC} = 3.6 V; $V_I = V_{CC}$	–	–	1	μA
I_{IL}	Input leakage current	V_{CC} = 5.5 V; $V_I = V_{SS}$	–	–	−100	μA
C_I (Note 5)	Input capacitance		–	–	5	pF
C_O (Note 5)	Output capacitance		–	–	8	pF

4. $V_{IL\ min}$ and $V_{IH\ max}$ are reference values only and are not tested.
5. This parameter is characterized initially and after a design or process change that affects the parameter. Not 100% tested.
6. The total current sunk by all I/Os must be limited to 100 mA and each I/O limited to 25 mA maximum.
7. The total current sourced by all I/Os must be limited to 85 mA.

Table 5. A.C. CHARACTERISTICS (V_{CC} = 2.3 V to 5.5 V; T_A = −40°C to +85°C, unless otherwise specified.) (Note 8)

Symbol	Parameter	Standard I²C		Fast I²C		Units
		Min	Max	Min	Max	
F_{SCL}	Clock Frequency		100		400	kHz
$t_{HD:STA}$	START Condition Hold Time	4		0.6		μs
t_{LOW}	Low Period of SCL Clock	4.7		1.3		μs
t_{HIGH}	High Period of SCL Clock	4		0.6		μs
$t_{SU:STA}$	START Condition Setup Time	4.7		0.6		μs
$t_{HD:DAT}$	Data In Hold Time	0		0		μs
$t_{SU:DAT}$	Data In Setup Time	250		100		ns
t_R (Note 9)	SDA and SCL Rise Time		1000		300	ns
t_F (Note 9)	SDA and SCL Fall Time		300		300	ns
$t_{SU:STO}$	STOP Condition Setup Time	4		0.6		μs
t_{BUF} (Note 9)	Bus Free Time Between STOP and START	4.7		1.3		μs
t_{AA}	SCL Low to Data Out Valid		3.5		0.9	μs
t_{DH}	Data Out Hold Time	100		50		ns
T_i (Note 9)	Noise Pulse Filtered at SCL and SDA Inputs		100		100	ns

Symbol	Parameter	Min	Max	Units
PORT TIMING				
t_{PV}	Output Data Valid		200	ns
t_{PS}	Input Data Setup Time	100		ns
t_{PH}	Input Data Hold Time	1		μs
INTERRUPT TIMING				
t_{IV}	Interrupt Valid		4	μs
t_{IR}	Interrupt Reset		4	μs

8. Test conditions according to “AC Test Conditions” table.
9. This parameter is characterized initially and after a design or process change that affects the parameter. Not 100% tested.

Table 6. A.C. TEST CONDITIONS

Input Rise and Fall time	≤ 10 ns
CMOS Input Voltages	0.2 V_{CC} to 0.8 V_{CC}
CMOS Input Reference Voltages	0.3 V_{CC} to 0.7 V_{CC}
TTL Input Voltages	0.4 V to 2.4 V
TTL Input Reference Voltages	0.8 V, 2.0 V
Output Reference Voltages	0.5 V_{CC}
Output Load: SDA, $\overline{INT}$	Current Source I_{OL} = 3 mA; C_L = 100 pF
Output Load: I/Os	Current Source: I_{OL}/I_{OH} = 10 mA; C_L = 50 pF

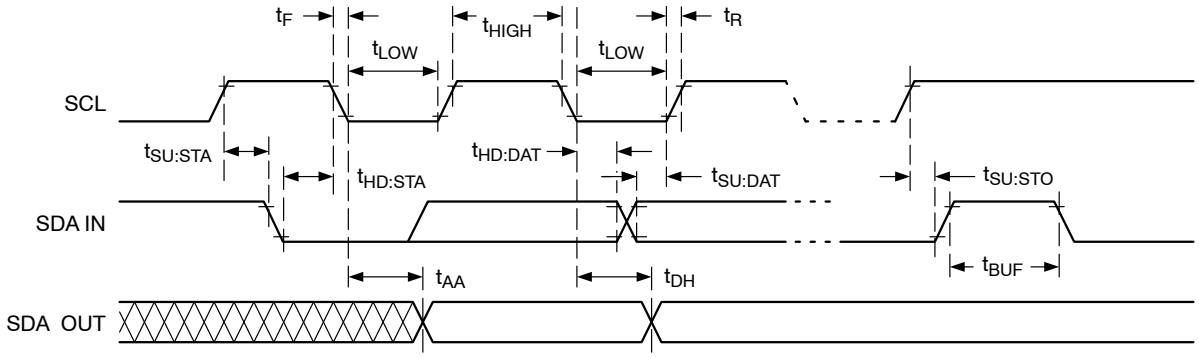

Figure 2. I²C Serial Interface Timing

Pin Description

SCL: Serial Clock

The serial clock input clocks all data transferred into or out of the device. The SCL line requires a pull−up resistor if it is driven by an open drain output.

SDA: Serial Data/Address

The bidirectional serial data/address pin is used to transfer all data into and out of the device. The SDA pin is an open drain output and can be wire−ORed with other open drain or open collector outputs. A pull−up resistor must be connected from SDA line to V_{CC}. The value of the pull−up resistor, R_P, can be calculated based on minimum and maximum values from Figure 3 and Figure 4 (see Note).

A0, A1, A2: Device Address Inputs

These inputs are used for extended addressing capability. The A0, A1, A2 pins should be hardwired to V_{CC} or V_{SS}. When hardwired, up to eight CAT9554/9554As may be addressed on a single bus system. The levels on these inputs are compared with corresponding bits, A2, A1, A0, from the slave address byte.

I/O_0 to I/O_7: Input / Output Ports

Any of these pins may be configured as input or output. The simplified schematic of I/O_0 to I/O_7 is shown in Figure 5. When an I/O is configured as an input, the Q1 and Q2 output transistors are off creating a high impedance input with a weak pull−up resistor (typical 100 kΩ). If the I/O pin is configured as an output, the push−pull output stage is enabled. Care should be taken if an external voltage is applied to an I/O pin configured as an output due to the low impedance paths that exist between the pin and either V_{CC} or V_{SS}.

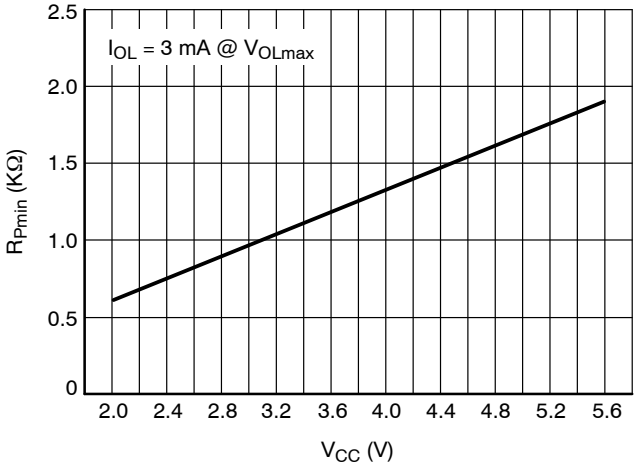

Figure 3. Minimum R_P Value vs. Supply Voltage

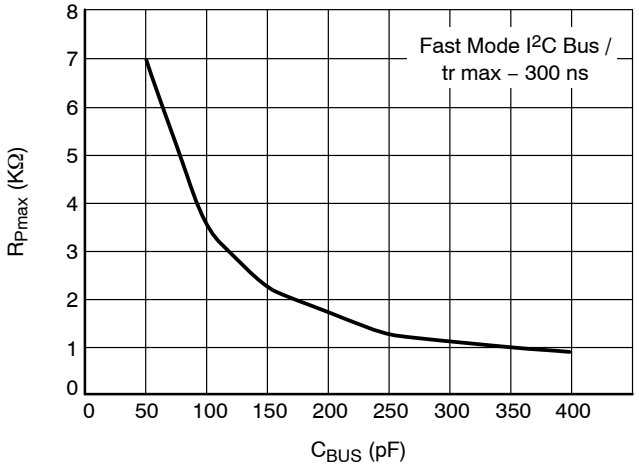

Figure 4. Maximum R_P Value vs. Bus Capacitance

NOTE: According to the Fast Mode I²C bus specification, for bus capacitance up to 200 pF, the pull up device can be a resistor. For bus loads between 200 pF and 400 pF, the pull−up device can be a current source (Imax = 3 mA) or a switched resistor circuit.

$\overline{INT}$: Interrupt Output

The open−drain interrupt output is activated when one of the port pins configured as an input changes state (differs from the corresponding input port register bit state). The interrupt is deactivated when the input returns to its previous state or the input port register is read. Changing an I/O from an output to an input may cause a false interrupt if the state of the pin does not match the contents of the input port register.

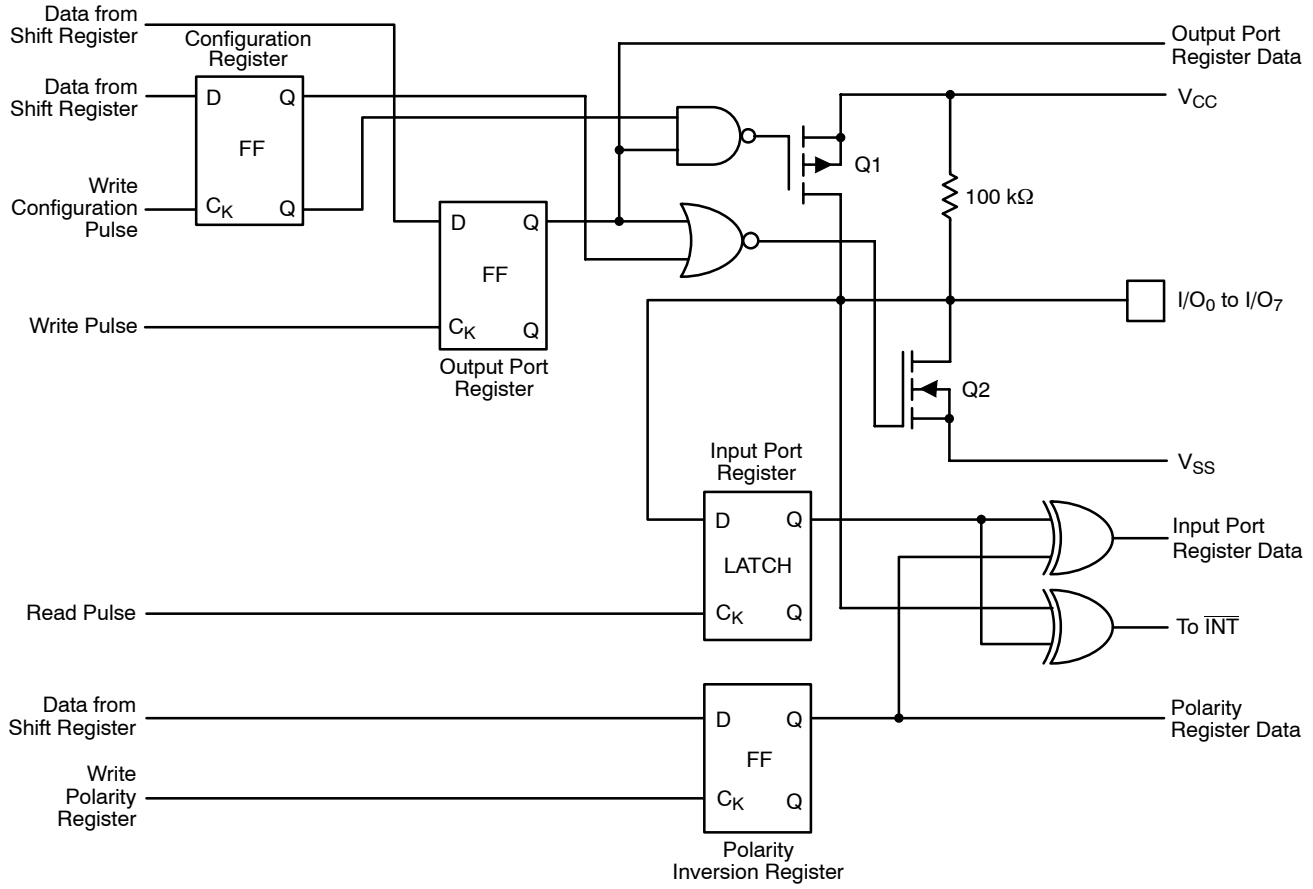

Figure 5. Simplified Schematic of I/O_0 to I/O_7

Functional Description

The CAT9554 and CAT9554A general purpose input/output (GPIO) peripherals provide up to eight I/O ports, controlled through an I^2C compatible serial interface.

The CAT9554/9554A support the I^2C Bus data transmission protocol. This I^2C Bus protocol defines any device that sends data to the bus to be a transmitter and any device receiving data to be a receiver. The transfer is controlled by the Master device which generates the serial clock and all START and STOP conditions for bus access. The CAT9554/9554A operate as a Slave device. Both the Master device and Slave device can operate as either transmitter or receiver, but the Master device controls which mode is activated.

I^2C Bus Protocol

The features of the I^2C bus protocol are defined as follows:

1. Data transfer may be initiated only when the bus is not busy.
2. During a data transfer, the data line must remain stable whenever the clock line is high. Any changes in the data line while the clock line is high will be interpreted as a START or STOP condition (Figure 6).

START and STOP Conditions

The START Condition precedes all commands to the device, and is defined as a HIGH to LOW transition of SDA when SCL is HIGH. The CAT9554/9554A monitors the SDA and SCL lines and will not respond until this condition is met.

A LOW to HIGH transition of SDA when SCL is HIGH determines the STOP condition. All operations must end with a STOP condition.

Device Addressing

After the bus Master sends a START condition, a slave address byte is required to enable the CAT9554/9554A for a read or write operation. The four most significant bits of the slave address are fixed as binary 0100 for the CAT9554 (Figure 7) and as 0111 for the CAT9554A (Figure 8). The CAT9554/9554A uses the next three bits as address bits.

The address bits A2, A1 and A0 are used to select which device is accessed from maximum eight devices on the same bus. These bits must compare to their hardwired input pins. The 8th bit following the 7−bit slave address is the R/$\overline{W}$ bit that specifies whether a read or write operation is to be performed. When this bit is set to “1”, a read operation is initiated, and when set to “0”, a write operation is selected.

Following the START condition and the slave address byte, the CAT9554/9554A monitors the bus and responds with an acknowledge (on the SDA line) when its address matches the transmitted slave address. The CAT9554/9554A then performs a read or a write operation depending on the state of the R/$\overline{W}$ bit.

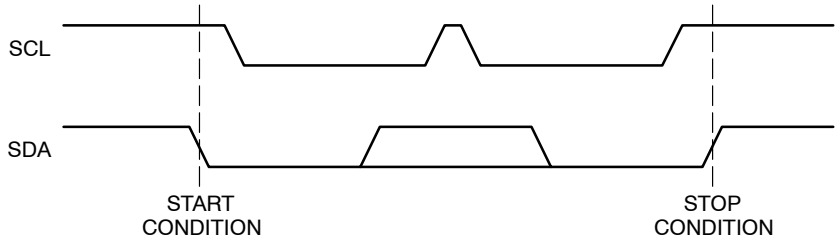

Figure 6. START/STOP Condition

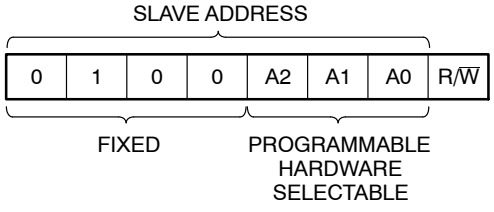

Figure 7. CAT9554 Slave Address

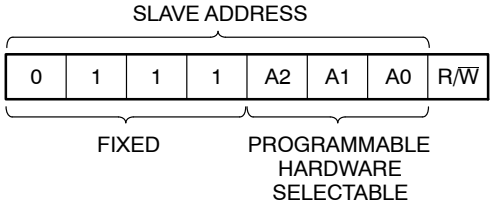

Figure 8. CAT9554A Slave Address

Acknowledge

After a successful data transfer, each receiving device is required to generate an acknowledge. The acknowledging device pulls down the SDA line during the ninth clock cycle, signaling that it received the 8 bits of data. The SDA line remains stable LOW during the HIGH period of the acknowledge related clock pulse (Figure 6).

The CAT9554/9554A responds with an acknowledge after receiving a START condition and its slave address. If the device has been selected along with a write operation, it responds with an acknowledge after receiving each 8−bit byte.

When the CAT9554/9554A begins a READ mode it transmits 8 bits of data, releases the SDA line, and monitors the line for an acknowledge. Once it receives this acknowledge, the CAT9554/9554A will continue to transmit data. If no acknowledge is sent by the Master, the device terminates data transmission and waits for a STOP condition. The master must then issue a STOP condition to return the CAT9554/9554A to the standby power mode and place the device in a known state.

Registers and Bus Transactions

The CAT9554/9554A consist of an input port register, an output port register, a polarity inversion register and a configuration register. Table 7 shows the register address table. Tables 8 to 11 list Register 0 through Register 3 information.

Table 7. REGISTER COMMAND BYTE

Command (hex)	Protocol	Function
0x00	Read byte	Input port register
0x01	Read/write byte	Output port register
0x02	Read/write byte	Polarity inversion register
0x03	Read/write byte	Configuration register

The command byte is the first byte to follow the device address byte during a write/read bus transaction. The register command byte acts as a pointer to determine which register will be written or read.

The input port register is a read only port. It reflects the incoming logic levels of the I/O pins, regardless of whether the pin is defined as an input or an output by the configuration register. Writes to the input port register are ignored.

Table 8. REGISTER 0 – INPUT PORT REGISTER

bit	I_7	I_6	I_5	I_4	I_3	I_2	I_1	I_0
default	1	1	1	1	1	1	1	1

Table 9. REGISTER 1 – OUTPUT PORT REGISTER

bit	O_7	O_6	O_5	O_4	O_3	O_2	O_1	O_0
default	1	1	1	1	1	1	1	1

Table 10. REGISTER 2 – POLARITY INVERSION REGISTER

bit	N_7	N_6	N_5	N_4	N_3	N_2	N_1	N_0
default	0	0	0	0	0	0	0	0

Table 11. REGISTER 3 – CONFIGURATION REGISTER

bit	C_7	C_6	C_5	C_4	C_3	C_2	C_1	C_0
default	1	1	1	1	1	1	1	1

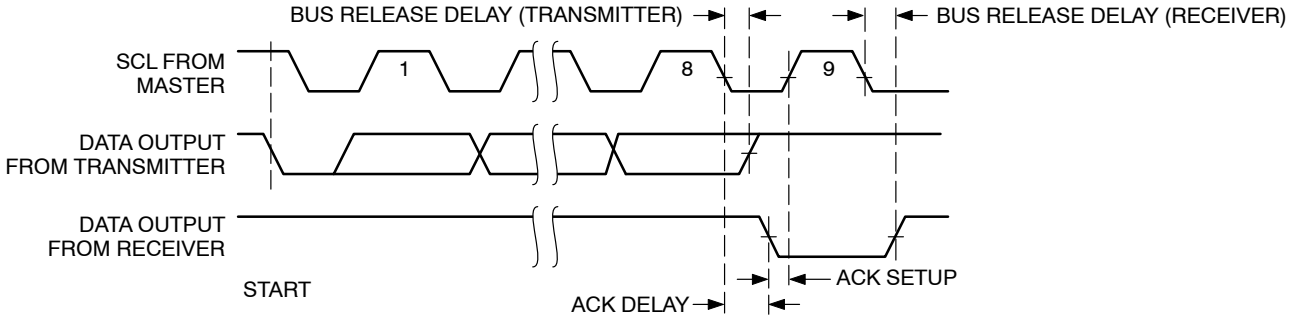

Figure 9. Acknowledge Timing

The output port register sets the outgoing logic levels of the I/O ports, defined as outputs by the configuration register. Bit values in this register have no effect on I/O pins defined as inputs. Reads from the output port register reflect the value that is in the flip−flop controlling the output, not the actual I/O pin value.

The polarity inversion register allows the user to invert the polarity of the input port register data. If a bit in this register is set (“1”) the corresponding input port data is inverted. If a bit in the polarity inversion register is cleared (“0”), the original input port polarity is retained.

The configuration register sets the directions of the ports. Set the bit in the configuration register to enable the corresponding port pin as an input with a high impedance output driver. If a bit in this register is cleared, the corresponding port pin is enabled as an output. At power−up, the I/Os are configured as inputs with a weak pull−up resistor to V_{CC}.

Data is transmitted to the CAT9554/9554A registers using the write mode shown in Figure 10 and Figure 11.

The CAT9554/9554A registers are read according to the timing diagrams shown in Figure 12 and Figure 13. Once a command byte has been sent, the register which was addressed will continue to be accessed by reads until a new command byte will be sent.

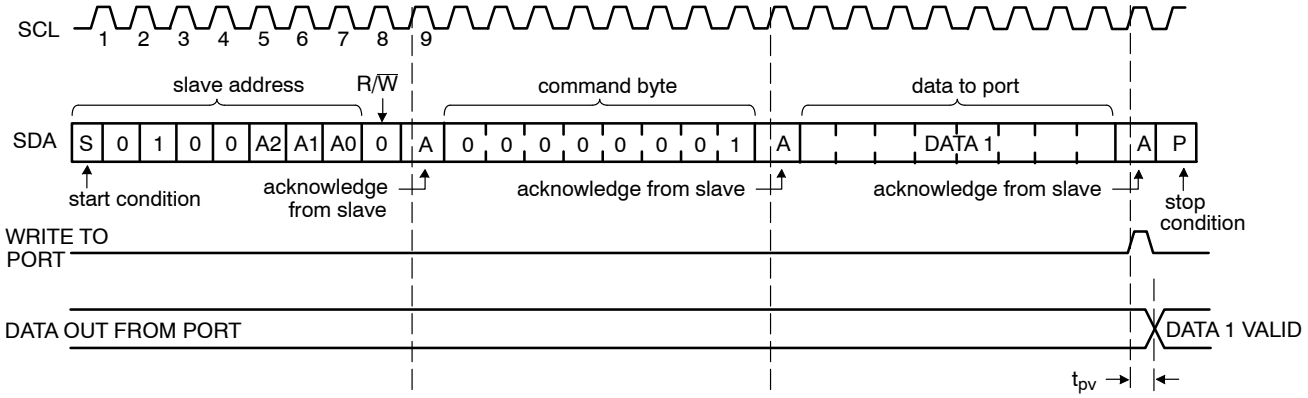

Figure 10. Write to Output Port Register

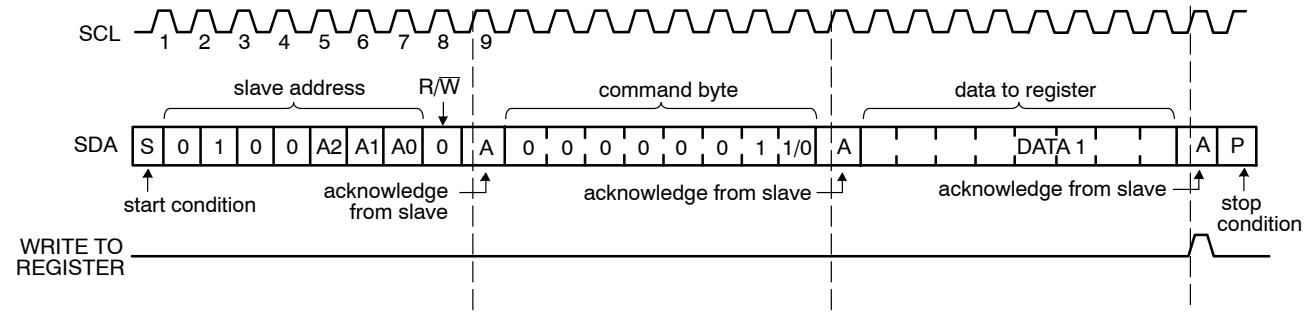

Figure 11. Write to Configuration or Polarity Inversion Register

Power−On Reset Operation

When the power supply is applied to V_{CC} pin, an internal power−on reset pulse holds the CAT9554/9554A in a reset state until V_{CC} reaches V_{POR} level. At this point, the reset condition is released and the internal state machine and the CAT9554/9554A registers are initialized to their default state.

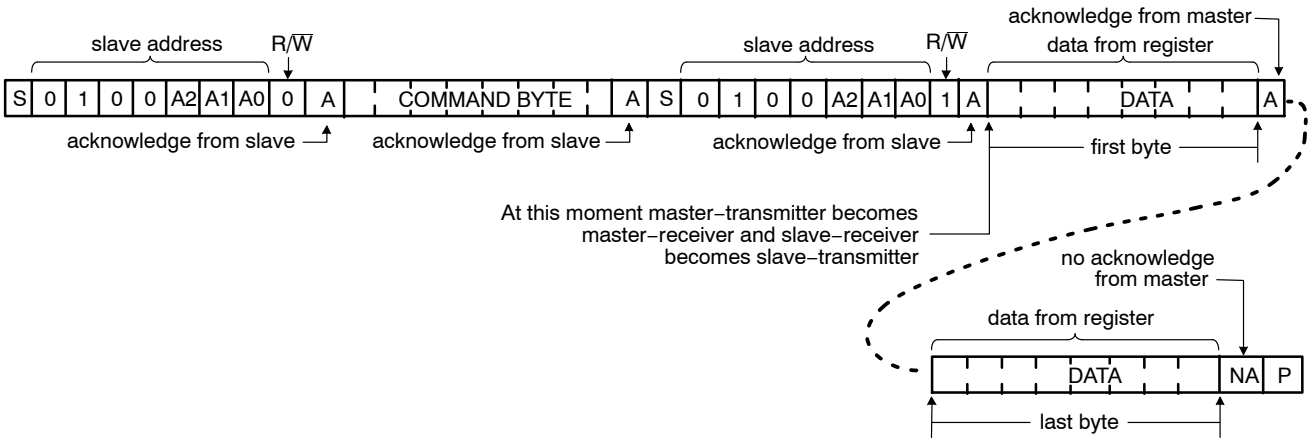

Figure 12. Read from Register

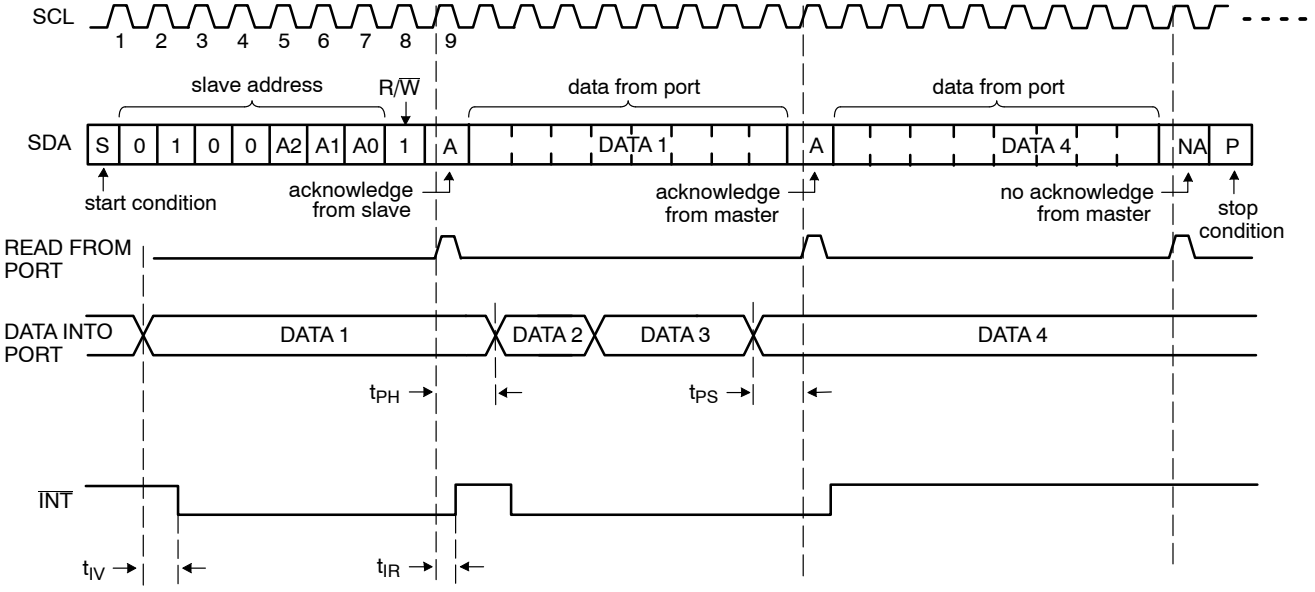

Figure 13. Read Input Port Register

PACKAGE DIMENSIONS

SOIC−16, 150 mils
CASE 751BG−01
ISSUE O

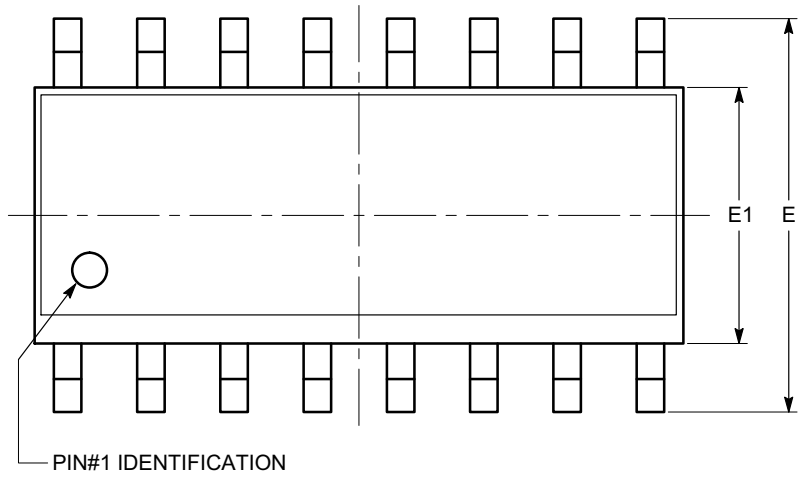

TOP VIEW

SYMBOL	MIN	NOM	MAX
A	1.35		1.75
A1	0.10		0.25
b	0.33		0.51
c	0.19		0.25
D	9.80	9.90	10.00
E	5.80	6.00	6.20
E1	3.80	3.90	4.00
e		1.27 BSC	
h	0.25		0.50
L	0.40		1.27
θ	0º		8º

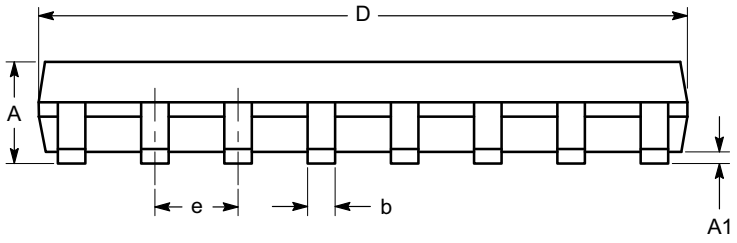

SIDE VIEW

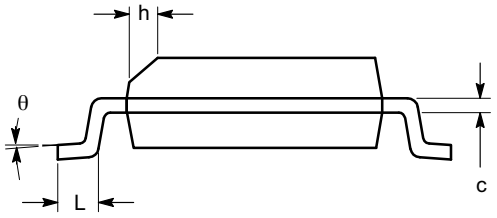

END VIEW

Notes:
(1) All dimensions are in millimeters. Angles in degrees.
(2) Complies with JEDEC MS-012.

PACKAGE DIMENSIONS

TQFN16, 4x4
CASE 510AE−01
ISSUE A

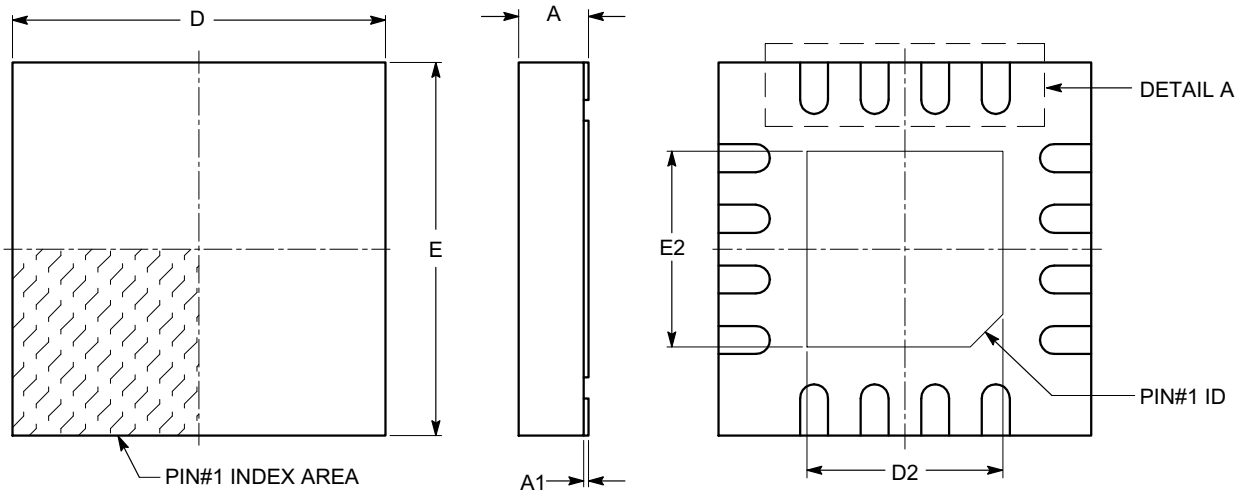

TOP VIEW **SIDE VIEW** **BOTTOM VIEW**

SYMBOL	MIN	NOM	MAX
A	0.70	0.75	0.80
A1	0.00	0.02	0.05
A3		0.20 REF	
b	0.25	0.30	0.35
D	3.90	4.00	4.10
D2	2.00	−−−	2.25
E	3.90	4.00	4.10
E2	2.00	−−−	2.25
e		0.65 BSC	
L	0.45	−−−	0.65

Notes:
(1) All dimensions are in millimeters.
(2) Complies with JEDEC MO-220.

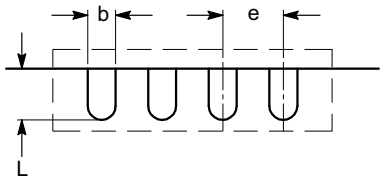

DETAIL A

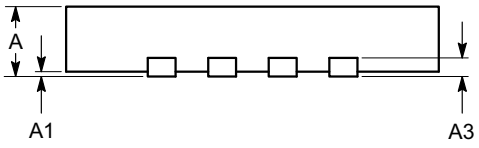

FRONT VIEW

PACKAGE DIMENSIONS

TSSOP16, 4.4x5
CASE 948AN−01
ISSUE O

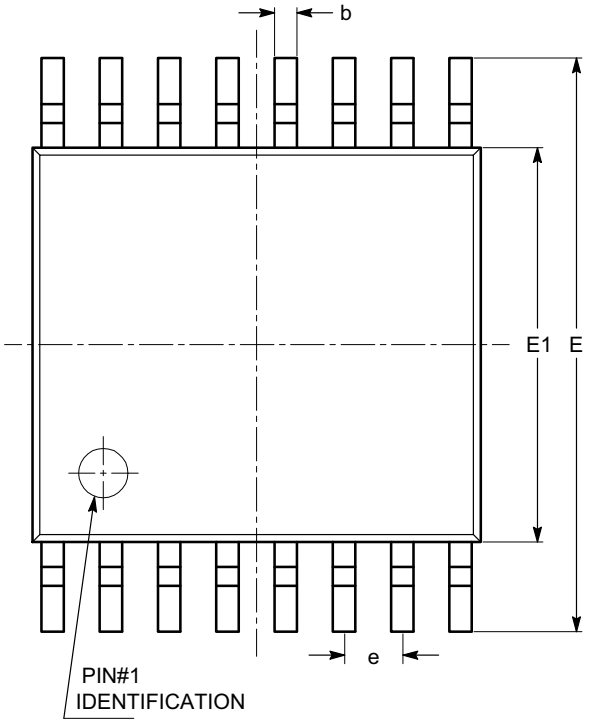

TOP VIEW

SYMBOL	MIN	NOM	MAX
A			1.10
A1	0.05		0.15
A2	0.85		0.95
b	0.19		0.30
c	0.13		0.20
D	4.90		5.10
E	6.30		6.50
E1	4.30		4.50
e	0.65 BSC		
L	1.00 REF		
L1	0.45		0.75
θ	0º		8º

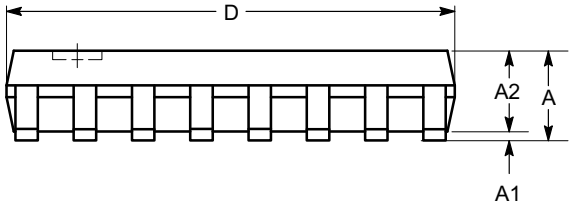

SIDE VIEW

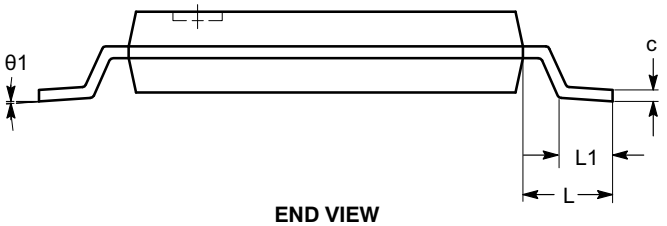

END VIEW

Notes:
(1) All dimensions are in millimeters. Angles in degrees.
(2) Complies with JEDEC MO-153.

Example of Ordering Information (Note 12)

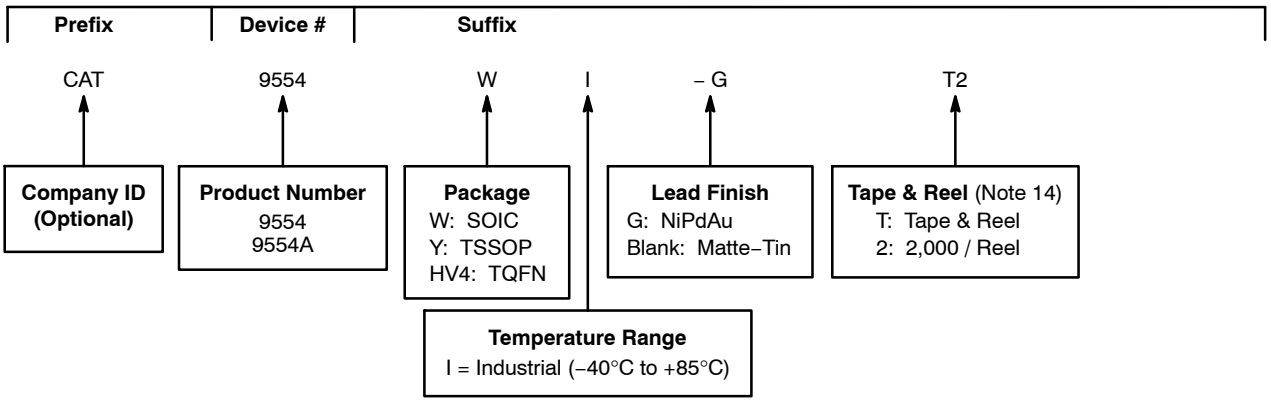

Table 12. ORDERING INFORMATION

Part Number	Package	Lead Finish
CAT9554WI–G	SOIC	NiPdAu
CAT9554WI–GT2	SOIC	NiPdAu
CAT9554YI–G	TSSOP	NiPdAu
CAT9554YI–GT2	TSSOP	NiPdAu
CAT9554HV4I–G	TQFN	NiPdAu
CAT9554HV4I–GT2	TQFN	NiPdAu
CAT9554AWI–G	SOIC	NiPdAu
CAT9554AWI–GT2	SOIC	NiPdAu
CAT9554AYI–G	TSSOP	NiPdAu
CAT9554AYI–GT2	TSSOP	NiPdAu
CAT9554AHV4I–G	TQFN	NiPdAu
CAT9554AHV4I–GT2	TQFN	NiPdAu

10. All packages are RoHS–compliant (Lead–free, Halogen–free).
11. The standard lead finish is NiPdAu.
12. The device used in the above example is a CAT9554WI–GT2 (SOIC, Industrial Temperature, NiPdAu, Tape & Reel, 2,000/Reel).
13. For additional package and temperature options, please contact your nearest ON Semiconductor Sales office.
14. For information on tape and reel specifications, including part orientation and tape sizes, please refer to our Tape and Reel Packaging Specifications Brochure, BRD8011/D.

ON Semiconductor is licensed by Philips Corporation to carry the I^2C Bus Protocol.

ON Semiconductor and ON are registered trademarks of Semiconductor Components Industries, LLC (SCILLC). SCILLC reserves the right to make changes without further notice to any products herein. SCILLC makes no warranty, representation or guarantee regarding the suitability of its products for any particular purpose, nor does SCILLC assume any liability arising out of the application or use of any product or circuit, and specifically disclaims any and all liability, including without limitation special, consequential or incidental damages. “Typical” parameters which may be provided in SCILLC data sheets and/or specifications can and do vary in different applications and actual performance may vary over time. All operating parameters, including “Typicals” must be validated for each customer application by customer’s technical experts. SCILLC does not convey any license under its patent rights nor the rights of others. SCILLC products are not designed, intended, or authorized for use as components in systems intended for surgical implant into the body, or other applications intended to support or sustain life, or for any other application in which the failure of the SCILLC product could create a situation where personal injury or death may occur. Should Buyer purchase or use SCILLC products for any such unintended or unauthorized application, Buyer shall indemnify and hold SCILLC and its officers, employees, subsidiaries, affiliates, and distributors harmless against all claims, costs, damages, and expenses, and reasonable attorney fees arising out of, directly or indirectly, any claim of personal injury or death associated with such unintended or unauthorized use, even if such claim alleges that SCILLC was negligent regarding the design or manufacture of the part. SCILLC is an Equal Opportunity/Affirmative Action Employer. This literature is subject to all applicable copyright laws and is not for resale in any manner.

PUBLICATION ORDERING INFORMATION

LITERATURE FULFILLMENT:
Literature Distribution Center for ON Semiconductor
P.O. Box 5163, Denver, Colorado 80217 USA
Phone: 303–675–2175 or 800–344–3860 Toll Free USA/Canada
Fax: 303–675–2176 or 800–344–3867 Toll Free USA/Canada
Email: orderlit@onsemi.com

N. American Technical Support: 800–282–9855 Toll Free USA/Canada
Europe, Middle East and Africa Technical Support:
Phone: 421 33 790 2910
Japan Customer Focus Center
Phone: 81–3–5773–3850

ON Semiconductor Website: **www.onsemi.com**

Order Literature: http://www.onsemi.com/orderlit

For additional information, please contact your local Sales Representative