CAT5133

16 Volt Digital Potentiometer (POT) with 128 Taps and an Increment Decrement Interface

ON Semiconductor®

http://onsemi.com

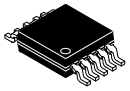

MSOP−10
Z SUFFIX
CASE 846AE

PIN CONNECTIONS

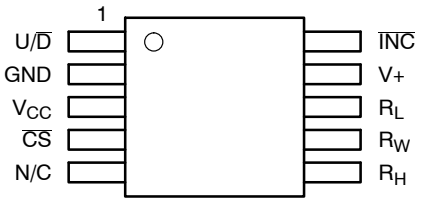

(Top View)

ORDERING INFORMATION

Device	Package	Shipping†
CAT5133ZI−10−GT3	MSOP−10 (Pb−Free)	3,000/ Tape & Reel
CAT5133ZI−50−GT3 (Note 4)	MSOP−10 (Pb−Free)	3,000/ Tape & Reel
CAT5133ZI−00−GT3 (Note 4)	MSOP−10 (Pb−Free)	3,000/ Tape & Reel

†For information on tape and reel specifications, including part orientation and tape sizes, please refer to our Tape and Reel Packaging Specifications Brochure, BRD8011/D.

1. For detailed information and a breakdown of device nomenclature and numbering systems, please see the ON Semiconductor Device Nomenclature document, TND310/D, available at www.onsemi.com.
2. All packages are RoHS-compliant (Lead-Free, Halogen-Free).
3. The standard lead finish is NiPdAu.
4. For additional package and temperature options, please contact your nearest ON Semiconductor Sales office.

Description

The CAT5133 is a high voltage digital POT integrated with EEPROM memory and control logic to operate in a similar manner to a mechanical potentiometer. The digital ponentiometer consists of a series of resistive elements connected between two externally accessible end points. The tap points between each resistive element are connected to the wiper outputs with CMOS switches. A 7-bit wiper control register (WCR) independently controls the wiper tap switches for the digital potentiometer. Associated with the control register is a 7-bit nonvolatile memory data register (DR) used for storing the wiper settings. Changing the value of the wiper control register or storing that value into the nonvolatile memory is performed via a 3-input Increment-Decrement interface.

The CAT5133 comes with 2 voltage supply inputs: V_{CC} (digital supply voltage) input and V+ (analog bias supply) input. Providing separate Digital and Analog inputs allow the potentiometer terminals to be as much as 10 volts above V_{CC} and 16 volts above ground.

The CAT5133 can be used as a potentiometer or as a two terminal, variable resistor. It is designed for circuit level or system level adjustments in a wide variety of applications.

On power-up, the contents of the nonvolatile data register (DR) are transferred to the wiper control register (WCR) and the wiper is positioned to that location. The CAT5133 is shipped with the DR programmed to position 64.

Features

- Single Linear Digital Potentiometer with 128 Taps
- End-to-End Resistance of 10 kΩ, 50 kΩ or 100 kΩ
- 2-wire Interface
- Fast Up/Down Wiper Control Mode
- Non-volatile Wiper Setting Storage
- Automatic Wiper Setting Recall at Power−up
- Digital Supply Range (V_{CC}): 2.7 V to 5.5 V
- Analog Supply Range (V+): +8 V to +16 V
- Low Standby Current: 15 μA
- 100 Year Wiper Setting Memory
- Industrial Temperature Range: −40°C to +85°C
- 10-pin MSOP Package
- These Devices are Pb-Free, Halogen Free/BFR Free and are RoHS Compliant

Applications

- LCD Screen Adjustment
- Volume Control
- Mechanical Potentiometer Replacement
- Gain Adjustment
- Line Impedance Matching
- VCOM Settings Adjustment

© Semiconductor Components Industries, LLC, 2013

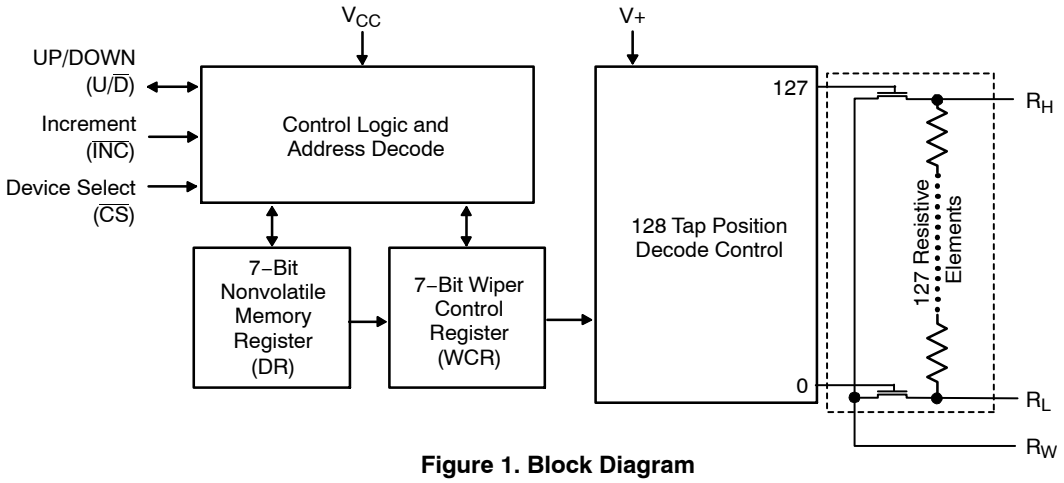

Figure 1. Block Diagram

Table 1. PIN DESCRIPTIONS

Pin	Name	Function
1	U/$\overline{D}$	Up/Down Data Input − Determines the direction of movement of the wiper
2	GND	Ground
3	V_{CC}	Logic Supply Voltage (2.7 V to 5.5 V)
4	$\overline{CS}$	Chip Select − The chip is selected when the input is low.
5	N/C	No Connect
6	R_H	High Reference Terminal for the Potentiometer
7	R_W	Wiper Terminal for the Potentiometer
8	R_L	Low Reference Terminal for the Potentiometer
9	V_+	Analog Bias Voltage Input (+8.0 V to +16.0 V)
10	$\overline{INC}$	Increment Input − Moves the wiper in the direction determined by the Up/Down input on each negative edge

Device Operation

The CAT5133 operates like a digitally controlled potentiometer with R_H and R_L equivalent to the high and low terminals and R_W equivalent to the mechanical potentiometer's wiper. There are 128 available tap positions including the resistor end points, R_H and R_L. There are 127 resistor elements connected in series between the R_H and R_L terminals. The wiper terminal is connected to one of the 128 taps and controlled by three inputs, $\overline{INC}$, U/$\overline{D}$ and $\overline{CS}$. These inputs control a 7-bit up/down counter whose output is decoded to select the wiper position. The selected wiper position can be stored in nonvolatile memory using the $\overline{INC}$ and $\overline{CS}$ inputs.

With $\overline{CS}$ set LOW the CAT5133 is selected and will respond to the U/$\overline{D}$ and $\overline{INC}$ inputs. HIGH to LOW transitions on $\overline{INC}$ will increment or decrement the wiper (depending on the state of the U/$\overline{D}$ input and 7-bit counter). The wiper, when at either fixed terminal, acts like its mechanical equivalent and does not move beyond the last position. The value of the counter is stored in nonvolatile memory whenever $\overline{CS}$ transitions HIGH while the $\overline{INC}$ input is also HIGH. When the CAT5133 is powered-down; the last stored wiper counter position is maintained in the nonvolatile memory. When power is restored, the contents of the memory are recalled and the counter is set to the value stored.

With $\overline{INC}$ set low, the CAT5133 may be de-selected and powered down without storing the current wiper position in nonvolatile memory. This allows the system to always power up to a preset value stored in nonvolatile memory.

Table 2. OPERATION MODES

$\overline{INC}$	$\overline{CS}$	U/$\overline{D}$	Operation
High to Low	Low	High	Wiper toward H
High to Low	Low	Low	Wiper toward L
High	Low to High	X	Store Wiper Position
Low	Low to High	X	No Store, Return to Standby
X	High	X	Standby

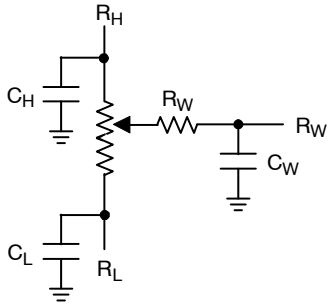

Figure 2. Potentiometer Equivalent Circuit

Power-On and Potentiometer Characteristics

The CAT5133 is a 128-position, digital controlled potentiometer. When applying power to the CAT5133, V_{CC} must be supplied prior to or simultaneously with V+. At the same time, the signals on R_H, R_W and R_L terminals should not exceed V+. If V+ is applied before V_{CC}, the electronic switches of the digital potentiometer are powered in the absence of the switch control signals, that could result in multiple switches being turned on. This causes unexpected wiper settings and possible current overload of the potentiometer.

When V_{CC} is applied, the device turns on at the mid-point wiper location (64) until the wiper register can be loaded with the nonvolatile memory location previously stored in the device. After the nonvolatile memory data is loaded into the wiper register the wiper location will change to the previously stored wiper position.

At power-down, it is recommended to turn-off first the signals on R_H, R_W and R_L, followed by V+ and, after that, V_{CC}, in order to avoid unexpected transitions of the wiper and uncontrolled current overload of the potentiometer.

The end-to-end nominal resistance of the potentiometer has 128 contact points linearly distributed across the total resistor. Each of these contact points is addressed by the 7 bit wiper register which is decoded to select one of these 128 contact points.

Each contact point generates a linear resistive value between the 0 position and the 127 position. These values can be determined by dividing the end-to-end value of the potentiometer by 127. The 10 kΩ potentiometer has a resistance of ~79 Ω between each wiper position. However in addition to the ~79 Ω for each resistive segment of the potentiometer, a wiper resistance offset must be considered. Table 3 shows the effect of this value and how it would appear on the wiper terminal.

This offset will appear in each of the CAT5133 end-to-end resistance values in the same way as the 10 kΩ example. However resistance between each wiper position for the 50 kΩ version will be ~395 Ω and for the 100 kΩ version will be ~790 Ω.

Table 3. POTENTIOMETER RESISTANCE AND WIPER RESISTANCE OFFSET EFFECTS

Position	Typical R_W to R_L Resistance for 10 kΩ Digital Potentiometer			Position	Typical R_W to R_H Resistance for 10 kΩ Digital Potentiometer	
0	70 Ω or	0 Ω + 70 Ω		00	10,070 Ω or	10,000 Ω + 70 Ω
01	149 Ω or	79 Ω + 70 Ω		64	5,047 Ω or	4,977 Ω + 70 Ω
63	5,047 Ω or	4,977 Ω + 70 Ω		126	149 Ω or	79 Ω + 70 Ω
127	10,070 Ω or	10,000 Ω + 70 Ω		127	70 Ω or	0 Ω + 70 Ω

Table 4. ABSOLUTE MAXIMUM RATINGS

Parameters	Ratings	Units
Temperature Under Bias	−55 to +125	°C
Storage Temperature	−65 to +150	°C
Voltage on any U/$\overline{D}$, $\overline{INC}$, & $\overline{CS}$ Pins with Respect to V_{CC} (Note 5)	−0.3 to +V_{CC} + 0.3	V
Voltage on R_H, R_L, & R_W Pins with Respect to V_{CC}	V+	V
V_{CC} with Respect to Ground	−0.3 to +6.0	V
V+ with respect to Ground	−0.3 to +16.5	V
Wiper Current	±6	mA
Lead Soldering temperature (10 seconds)	+300	°C

Stresses exceeding Maximum Ratings may damage the device. Maximum Ratings are stress ratings only. Functional operation above the Recommended Operating Conditions is not implied. Extended exposure to stresses above the Recommended Operating Conditions may affect device reliability.

5. Latch-up protection is provided for stresses up to 100 mA on the digital from −0.3 V to V_{CC} + 0.3 V.

Recommended Operating Conditions

V_{CC} = +2.7 V to +5.5 V
V+ = +8.0 V to +16.0 V
Operating Temperature Range: −40°C to +85°C

Table 5. POTENTIOMETER CHARACTERISTICS (Over recommended operating conditions unless otherwise stated.)

Symbol	Parameter	Test Conditions	Limits			Units
			Min	Typ	Max	
R_{POT}	Potentiometer Resistance (10 kΩ)			10		kΩ
R_{POT}	Potentiometer Resistance (50 kΩ) (Note 12)			50		kΩ
R_{POT}	Potentiometer Resistance (100 kΩ) (Note 12)			100		kΩ
R_{TOL}	Potentiometer Resistance Tolerance				±20	%
	Power Rating	25°C			50	mW
I_W	Wiper Current				±3	mA
R_W	Wiper Resistance	I_W = +1 mA @ V+ = 12 V		70	150	Ω
		I_W = +1 mA @ V+ = 8 V		110	200	
V_{TERM}	Voltage on R_W, R_H or R_L	GND = 0 V; V+ = 8 V to 16 V	GND		V+	V
RES	Resolution			0.78		%
A_{LIN}	Absolute Linearity (Note 7)	$V_{W(n)(actual)} - V_{W(n)(expected)}$ (Notes 10, 11)			±1	LSB (Note 9)
R_{LIN}	Relative Linearity (Note 8)	$V_{W(n+1)} - [V_{W(n)} + LSB]$ (Notes 10, 11)			±0.5	LSB (Note 9)
TC_{RPOT}	Temperature Coefficient of R_{POT}	(Note 6)		±300		ppm/°C
TC_{Ratio}	Ratiometric Temperature Coefficient	(Note 6)			30	ppm/°C
$C_H/C_L/C_W$	Potentiometer Capacitances	(Note 6)		10/10/25		pF
fc	Frequency Response	R_{POT} = 50 kΩ		0.4		MHz

6. This parameter is tested initially and after a design or process change that affects the parameter.
7. Absolute linearity is utilized to determine actual wiper voltage versus expected voltage as determined by wiper position when used as a potentiometer.
8. Relative linearity is utilized to determine the actual change in voltage between two successive tap positions when used as a potentiometer.
9. LSB = $(R_{HM} - R_{LM})/127$; where R_{HM} and R_{LM} are the highest and lowest measured values on the wiper terminal.
10. n = 1, 2, ..., 127.
11. V^+ @ R_H; 0 V @ R_L; V_W measured @ R_W, with no load.
12. Contact factory for availability on this version of the CAT5133.

Table 6. DC ELECTRICAL CHARACTERISTICS (V_{CC} = +2.7 V to +6.0 V, unless otherwise specified.)

Symbol	Parameter	Test Conditions	Min	Max	Units
I_{CC1}	Power Supply Current	V_{CC} = 5.5 V, f_{INC} = 1 MHz, Input = GND		1	mA
I_{CC2}	Power supply Current Nonvolatile WRITE	V_{CC} = 5.5 V, f_{INC} = 1 MHz, Input = GND		3.0	mA
$I_{SB(VCC)}$	Standby Current (V_{CC} = 5 V)	V_{IN} = GND or V_{CC}, INC = VCC		5	μA
$I_{SB(V+)}$	V+ Standby Current	V_{CC} = 5 V, V+ = 16 V		10	μA
I_{LI}	Input Leakage Current	V_{IN} = GND to V_{CC}		10	μA
I_{LO}	Output Leakage Current	V_{OUT} = GND to V_{CC}		10	μA
V_{IL}	Input Low Voltage		–1	V_{CC} x 0.3	V
V_{IH}	Input High Voltage		V_{CC} x 0.7	V_{CC} + 1.0	V
V_{OL1}	Output Low Voltage (V_{CC} = 3.0 V)	I_{OL} = 3 mA		0.4	V

Table 7. CAPACITANCE (T_A = 25°C, f = 1.0 MHz, V_{CC} = 5.0 V)

Symbol	Parameter	Test Conditions	Min	Max	Units
$C_{I/O}$	Input/Output Capacitance (SDA)	$V_{I/O}$ = 0 V (Note 13)		8	pF
C_{IN}	Input Capacitance (A0, A1, SCL)	V_{IN} = 0 V (Note 13)		6	pF

Table 8. POWER UP TIMING (Notes 13, 14)

Symbol	Parameter	Min	Max	Units
t_{PUR}	Power-up to Read Operation		1	ms
t_{PUW}	Power-up to Write Operation		1	ms

Table 9. WIPER TIMING

Symbol	Parameter	Min	Max	Units
t_{WRPO}	Wiper Response Time After Power Supply Stable	5	10	μs
t_{WRL}	Wiper Response Time After Instruction Issued	5	10	μs

Table 10. WRITE CYCLE LIMITS

Symbol	Parameter	Min	Max	Units
t_{WR}	Write Cycle Time		5	ms

Table 11. RELIABILITY CHARACTERISTICS (Over recommended operating conditions unless otherwise stated.)

Symbol	Parameter	Reference Test Method	Min	Max	Units
N_{END} (Note 13)	Endurance	MIL–STD–883, Test Method 1033	100,000		Cycles/Byte
T_{DR} (Note 13)	Data Retention	MIL–STD–883, Test Method 1008	100		Years

13. This parameter is tested initially and after a design or process change that affects the parameter.
14. t_{PUR} and t_{PUW} are the delays required from the time V_{CC} is stable until the time the specified operation can be initiated.

Table 12. A.C. OPERATING CHARACTERISTICS (V_{CC} = +2.5 V to +6.0 V, V_H = V_{CC}, V_L = 0 V, unless otherwise specified.)

Symbol	Parameter	Min	Typ (Note 15)	Max	Units
t_{CI}	$\overline{CS}$ to $\overline{INC}$ Setup	100			ns
t_{DI}	U/$\overline{D}$ to $\overline{INC}$ Setup	50			ns
t_{ID}	U/$\overline{D}$ to $\overline{INC}$ Hold	100			ns
t_{IL}	$\overline{INC}$ LOW Period	250			ns
t_{IH}	$\overline{INC}$ HIGH Period	250			ns
t_{IC}	$\overline{INC}$ Inactive to $\overline{CS}$ Inactive	1			μs
t_{CPH}	$\overline{CS}$ Deselect Time (NO STORE)	100			ns
t_{CPH}	$\overline{CS}$ Deselect Time (STORE)	10			ms
t_{IW}	$\overline{INC}$ to VOUT Change		1	5	μs
t_{CYC}	$\overline{INC}$ Cycle Time	1			μs
t_R, t_F (Note 16)	$\overline{INC}$ Input Rise and Fall Time			500	μs
t_{PU} (Note 16)	Power-up to Wiper Stable			1	ms
t_{WR}	Store Cycle		5	10	ms

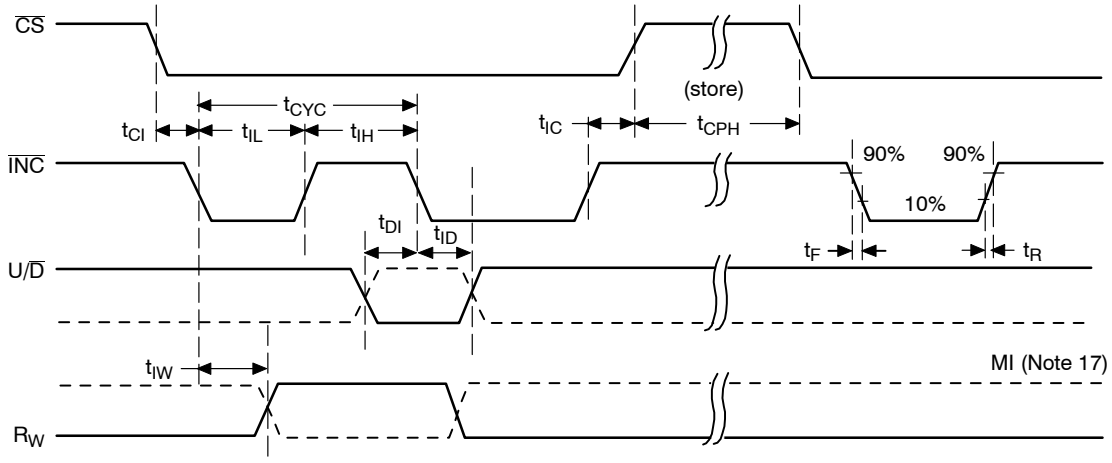

Figure 3. A.C. Timing

15. Typical values are for T_A = 25°C and nominal supply voltage.
16. This parameter is periodically sampled and not 100% tested.
17. MI in the A.C. Timing diagram refers to the minimum incremental change in the W output due to a change in the wiper position.

TYPICAL PERFORMANCE CHARACTERISTICS

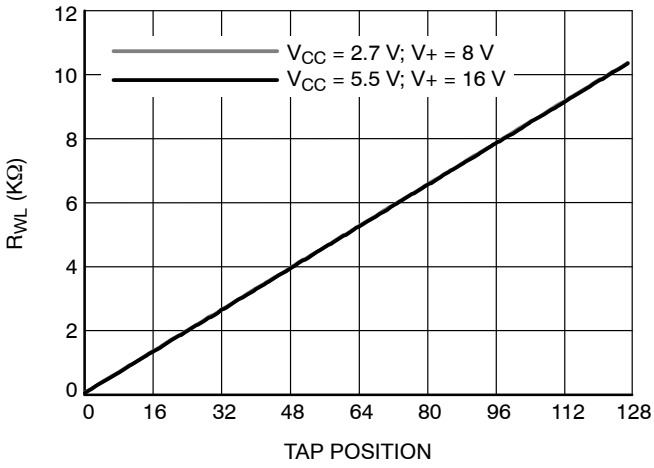

Figure 4. Resistance between R_W and R_L

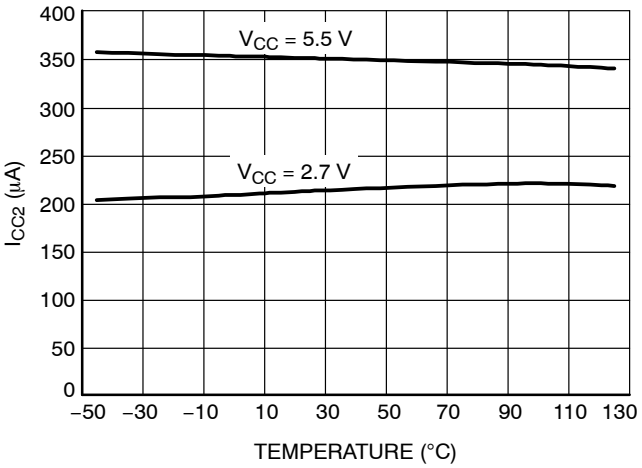

Figure 5. I_{CC2} (NV Write) vs. Temperature

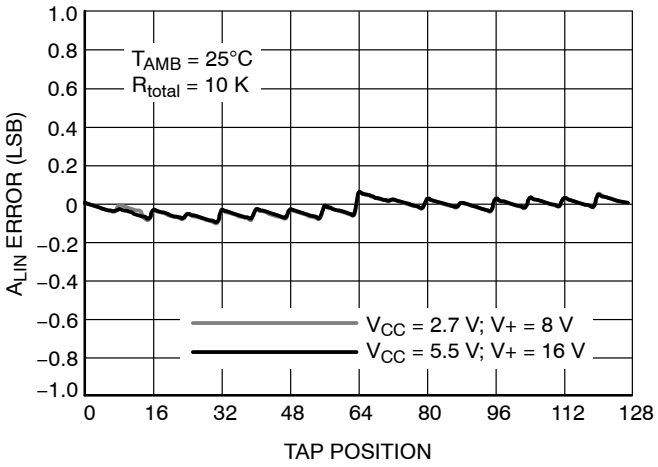

Figure 6. Absolute Linearity Error per Tap Position

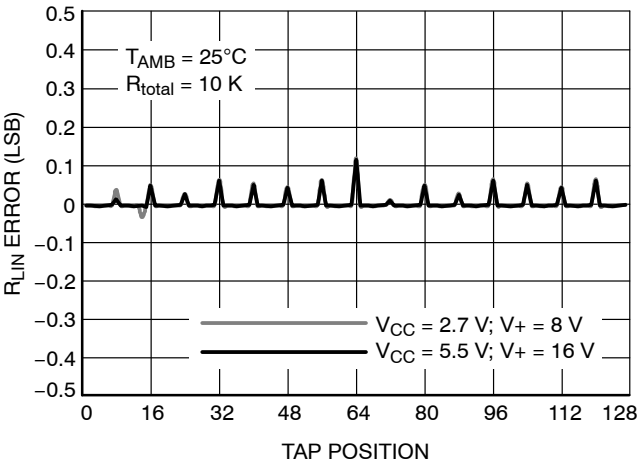

Figure 7. Relative Linearity Error

PACKAGE DIMENSIONS

MSOP 10, 3x3
CASE 846AE
ISSUE O

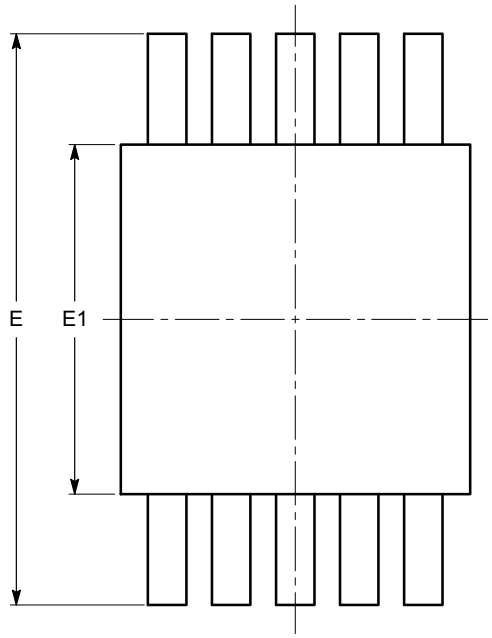

TOP VIEW

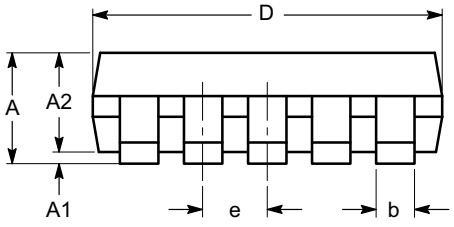

SIDE VIEW

SYMBOL	MIN	NOM	MAX
A			1.10
A1	0.00	0.05	0.15
A2	0.75	0.85	0.95
b	0.17		0.27
c	0.13		0.23
D	2.90	3.00	3.10
E	4.75	4.90	5.05
E1	2.90	3.00	3.10
e		0.50 BSC	
L	0.40	0.60	0.80
L1		0.95 REF	
L2		0.25 BSC	
θ	0°		8°

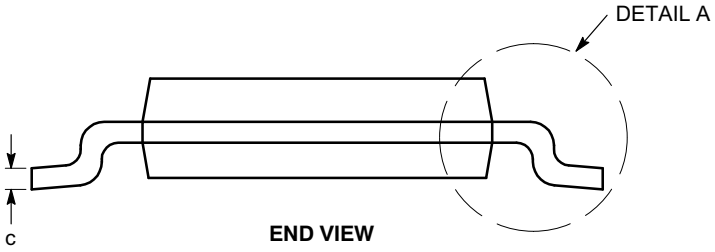

END VIEW

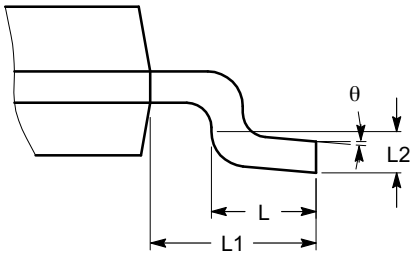

DETAIL A

Notes:
(1) All dimensions are in millimeters. Angles in degrees.
(2) Complies with JEDEC MO-187.

ON Semiconductor and ON are registered trademarks of Semiconductor Components Industries, LLC (SCILLC). SCILLC owns the rights to a number of patents, trademarks, copyrights, trade secrets, and other intellectual property. A listing of SCILLC's product/patent coverage may be accessed at www.onsemi.com/site/pdf/Patent−Marking.pdf. SCILLC reserves the right to make changes without further notice to any products herein. SCILLC makes no warranty, representation or guarantee regarding the suitability of its products for any particular purpose, nor does SCILLC assume any liability arising out of the application or use of any product or circuit, and specifically disclaims any and all liability, including without limitation special, consequential or incidental damages. "Typical" parameters which may be provided in SCILLC data sheets and/or specifications can and do vary in different applications and actual performance may vary over time. All operating parameters, including "Typicals" must be validated for each customer application by customer's technical experts. SCILLC does not convey any license under its patent rights nor the rights of others. SCILLC products are not designed, intended, or authorized for use as components in systems intended for surgical implant into the body, or other applications intended to support or sustain life, or for any other application in which the failure of the SCILLC product could create a situation where personal injury or death may occur. Should Buyer purchase or use SCILLC products for any such unintended or unauthorized application, Buyer shall indemnify and hold SCILLC and its officers, employees, subsidiaries, affiliates, and distributors harmless against all claims, costs, damages, and expenses, and reasonable attorney fees arising out of, directly or indirectly, any claim of personal injury or death associated with such unintended or unauthorized use, even if such claim alleges that SCILLC was negligent regarding the design or manufacture of the part. SCILLC is an Equal Opportunity/Affirmative Action Employer. This literature is subject to all applicable copyright laws and is not for resale in any manner.

PUBLICATION ORDERING INFORMATION

LITERATURE FULFILLMENT:
Literature Distribution Center for ON Semiconductor
P.O. Box 5163, Denver, Colorado 80217 USA
Phone: 303−675−2175 or 800−344−3860 Toll Free USA/Canada
Fax: 303−675−2176 or 800−344−3867 Toll Free USA/Canada
Email: orderlit@onsemi.com

N. American Technical Support: 800−282−9855 Toll Free USA/Canada
Europe, Middle East and Africa Technical Support:
Phone: 421 33 790 2910
Japan Customer Focus Center
Phone: 81−3−5817−1050

ON Semiconductor Website: **www.onsemi.com**

Order Literature: http://www.onsemi.com/orderlit

For additional information, please contact your local Sales Representative