CAT4134

500 mA Dual Channel Movie/Flash LED Driver

Description

The CAT4134 is a high power, dual channel boost converter which provides two matched LED currents. Output current levels are controlled by one of two resistors RSET or RFLASH. When the FLASH input pin is low (movie mode), RSET sets the current. When FLASH is high (flash mode), the resistor RFLASH sets the LED current. Each channel drives two or three white LEDs in series and provides a regulated current to control their brightness. Input supply down to 3 V is supported, making the device ideal for Li−Ion battery applications.

High frequency low noise operation allows the device to be used with small external inductors and ceramic capacitors while still maintaining excellent efficiency. When not in use the device can be placed into a “zero” quiescent mode via the shutdown pin.

In addition to soft-start control and current limiting, the CAT4134 include thermal shutdown protection. A dedicated overvoltage pin (OVP) allows the user to limit the maximum LED supply voltage. The device is packaged in the 12−pad TDFN 3 mm x 3 mm.

Features

- Dual Mode (Movie or Flash) Operation
- Independent Movie/Flash LED Current Control
- Can Drive 2, 3, 4 or 6 LEDs
- High LED Current (250 mA Max per Channel)
- Power Efficiency up to 85%
- Dual Frequency Mode 1.2 MHz and 900 kHz
- Soft−start Inrush Current
- Adjustable Overvoltage Protection
- Thermal Shutdown Protection
- Operating Temperature Range −40°C to +85°C
- 12−pad TDFN 3 mm x 3 mm Package
- These Devices are Pb−Free, Halogen Free/BFR Free and are RoHS Compliant

Applications

- Camera Flash
- Flash Light
- High−power White LEDs
- Digital Still Cameras
- Color LCD Backlighting

ON Semiconductor®

http://onsemi.com



TDFN−12
HV2 SUFFIX
CASE 511AN

PIN CONNECTIONS

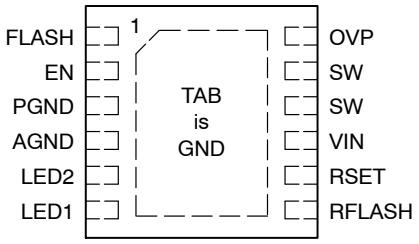

(Top View)

MARKING DIAGRAM

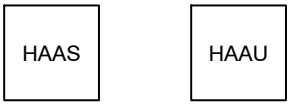

HAAS = CAT4134HV2−T2
HAAU = CAT4134HV2−GT2

ORDERING INFORMATION

Device	Package	Shipping
CAT4134HV2−T2 (Note 1)	TDFN−12 (Pb−Free)	2,000/ Tape & Reel
CAT4134HV2−GT2 (Note 2)	TDFN−12 (Pb−Free)	2,000/ Tape & Reel

1. Matte−Tin Plated Finish (RoHS−compliant).
2. NiPdAu Plated Finish (RoHS−compliant)

© Semiconductor Components Industries, LLC, 2010

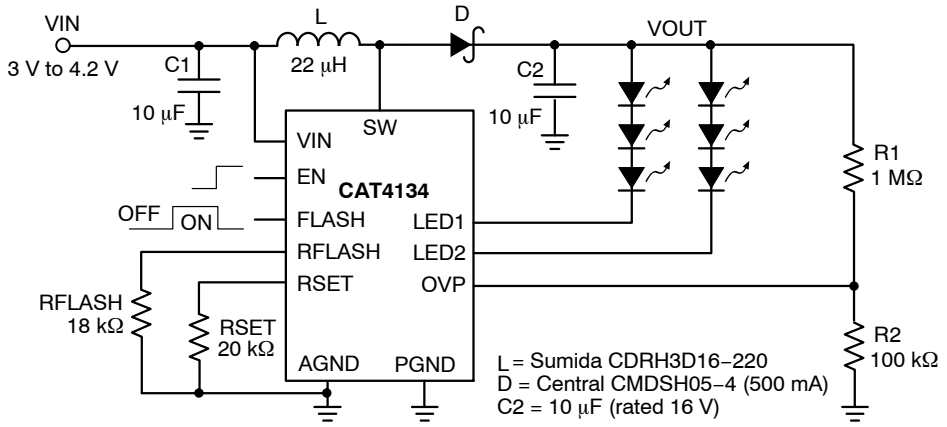

Figure 1. Typical Application Circuit

Table 1. ABSOLUTE MAXIMUM RATINGS

Parameters	Ratings	Units
SW voltage	20	V
VIN voltage	8	V
EN, FLASH, RSET, RFLASH voltage	VIN + 0.6 V	V
LED1, LED2 voltage	8	V
Output Current per Channel	300	mA
Storage Temperature Range	−65 to +160	°C
Junction Temperature Range	−40 to +125	°C
Lead Temperature	300	°C
ESD Rating − Human Body Model (HBM)	2,000	V

Stresses exceeding Maximum Ratings may damage the device. Maximum Ratings are stress ratings only. Functional operation above the Recommended Operating Conditions is not implied. Extended exposure to stresses above the Recommended Operating Conditions may affect device reliability.

Table 2. RECOMMENDED OPERATING CONDITIONS

Parameters	Range	Units
VIN	2.8 to 4.2	V
Ambient Temperature Range	−40 to +85	°C
Flash mode current per channel	25 to 250	mA
Movie mode current per channel	5 to 50	mA

Table 3. ELECTRICAL OPERATING CHARACTERISTICS
(V_{IN} = 3.6 V, EN = V_{IN} and at ambient temperature of 25°C (over recommended operating conditions unless otherwise specified))

Symbol	Parameter	Conditions	Min	Typ	Max	Unit
I_Q	Quiescent Current (not switching)	V_{LED1} > 0.5 V, V_{LED2} > 0.5 V		100	250	μA
I_{SD}	Shutdown Current	EN = 0 V		1		μA
I_{SW}	Switch Current Limit	Movie Mode (FLASH = Low) Flash Mode (FLASH = High)	0.5 1.7	1 2		A
R_{SW}	Switch Resistance	I_{SW} = 1000 mA		0.3	0.5	Ω
I_{LK}	Switch Leakage Current	Switch Off, V_{SW} = 5 V			5	μA
F_{OSC}	Oscillator Frequency	Movie Mode Flash Mode		1.2 0.9		MHz
V_{OVP}	OVP pin threshold		1.10	1.20	1.30	V
η	Efficiency	V_{OUT} = 10 V, Load = 200 mA		85		%
T_{SD}	Thermal Shutdown			150		°C
T_{HYST}	Thermal Hysteresis			20		°C
V_{UVLO}	Undervoltage Lock Out (UVLO) Threshold	Disabled when V_{IN} < V_{UVLO}		1.9	2.2	V
EN LOGIC CONTROL INPUT						
V_{SDHI} V_{SDLO}	Logic High Threshold Logic Low Threshold	EN > V_{SDHI} Enables Device	 0.4	0.7 0.7	1.5	V
I_{SDBIAS}	Input Bias current	EN = 3 V		10	40	μA
V_{RSET}	RSET pin voltage	22 kΩ < R_{SET} < 200 kΩ	1.10	1.20	1.30	V
V_{RFLASH}	RFLASH pin voltage	22 kΩ < R_{FLASH} < 200 kΩ	1.10	1.20	1.30	V
V_{LED}	LED1, LED2 Pin Voltage (whichever is the lower)	Both Flash and Movie Mode (lower voltage pin is regulated)		400		mV
I_{LED}	Programmed LED Current	R_{SET} = 21.6 kΩ R_{FLASH} = 43.2 kΩ R_{FLASH} = 21.6 kΩ		20 50 100		mA
$I_{LED-RAN}$	LED Current Adjust Range per LED output	In Movie mode In Flash mode	5 25		50 200	mA
$I_{LED-ACC}$	LED Current Accuracy			±5		%
$I_{LED-DEV}$	LED Current Matching			±5		%
FLASH CONTROL LOGIC INPUT						
V_{FHI} V_{FLO}	Logic High Threshold Logic Low Threshold	FLASH > V_{FHI} Flash Enabled	 0.4	0.7 0.7	1.5	V
I_{INPUT}	Input Bias current	FLASH = 3 V		10	40	μA

TYPICAL CHARACTERISTICS

(VIN = 3.6 V, FLASH = VIN, C_{IN} = 4.7 μF, C_{OUT} = 10 μF, L = 22 μH with 2 LEDs at 100 mA, T_{AMB} = 25°C, unless otherwise specified.)

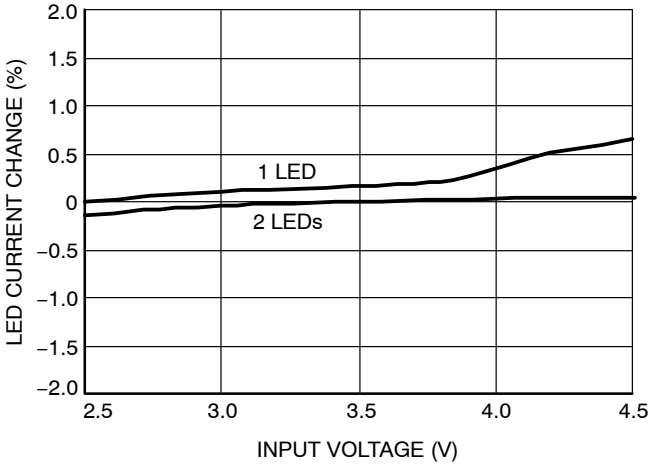

Figure 2. LED Current Regulation (100 mA Load)

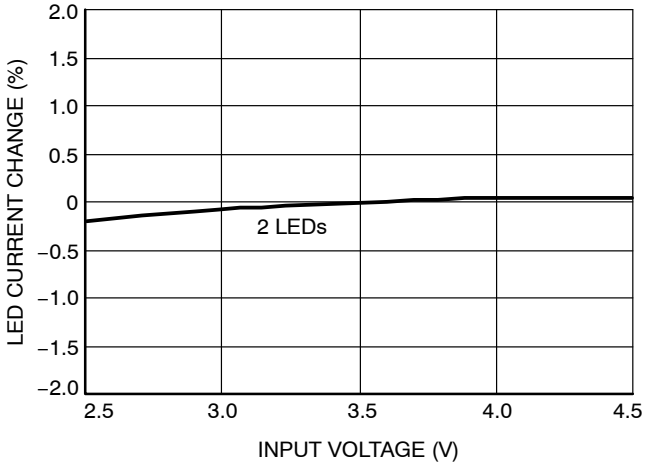

Figure 3. LED Current Regulation (200 mA Load, Flash)

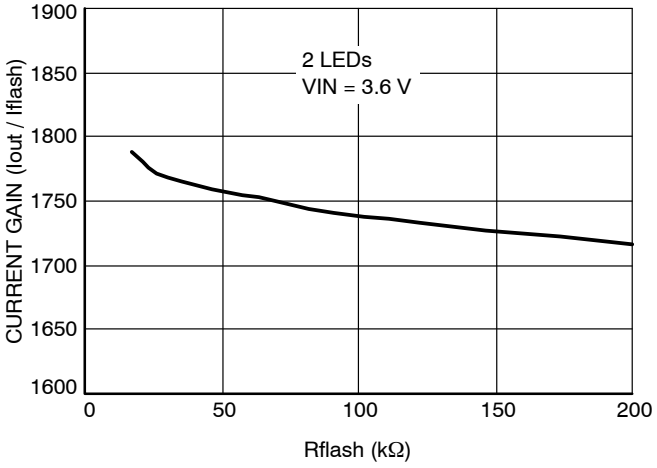

Figure 4. Current Gain vs. RFLASH

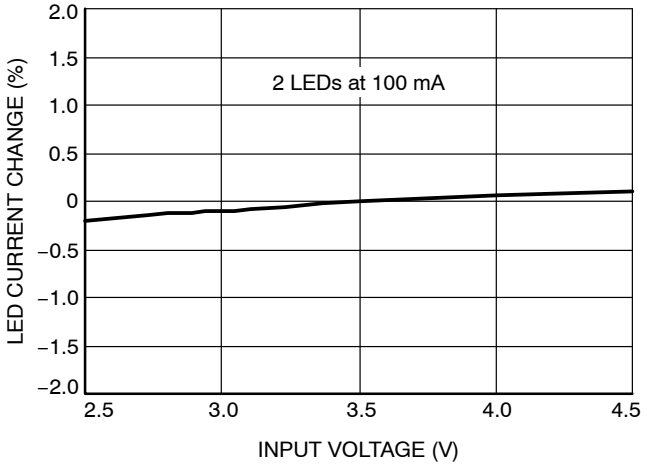

Figure 5. LED Current Regulation (100 mA Load, Flash)

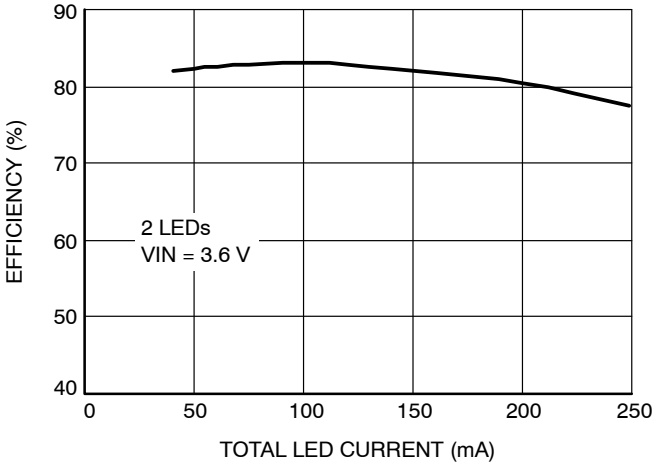

Figure 6. Efficiency vs. Output Current (Flash Mode)

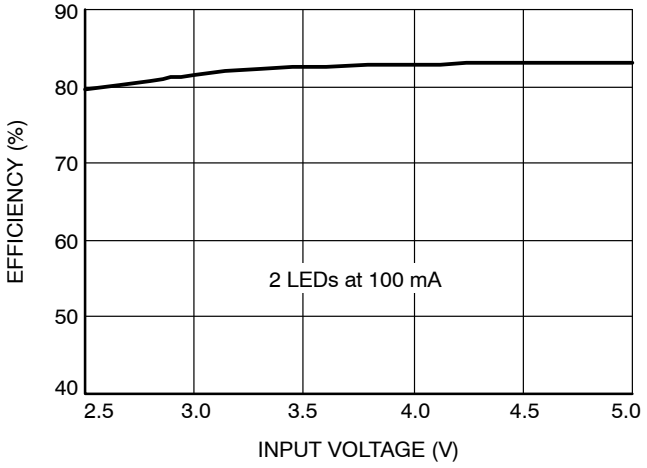

Figure 7. Efficiency vs. Input Voltage (Flash Mode)

TYPICAL CHARACTERISTICS

(VIN = 3.6 V, FLASH = VIN, C_{IN} = 4.7 μF, C_{OUT} = 10 μF, L = 22 μH with 2 LEDs at 100 mA, T_{AMB} = 25°C, unless otherwise specified.)

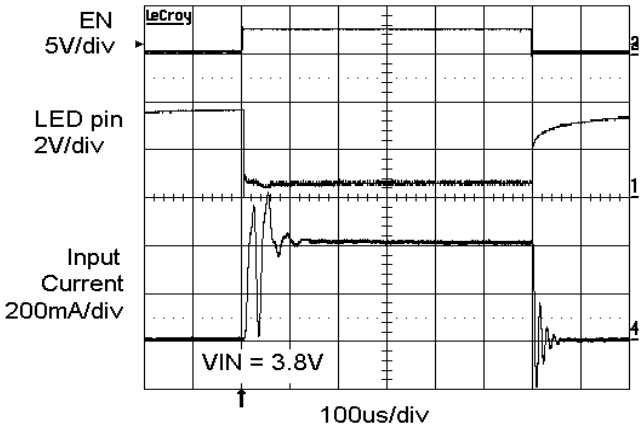

Figure 8. Power−up Transient (2 LEDs at 200 mA)

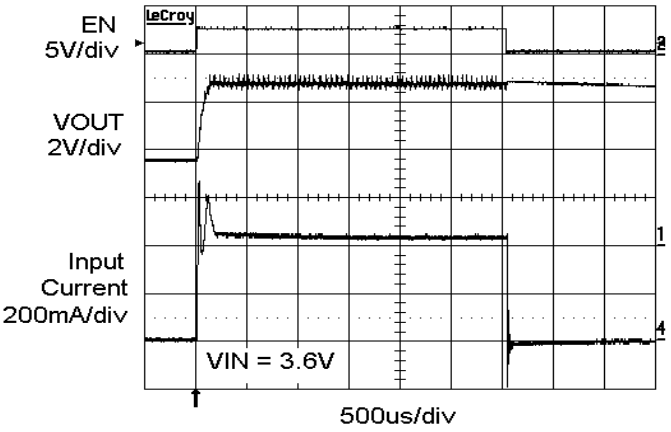

Figure 9. Power−up Transient (2 LEDs at 200 mA)

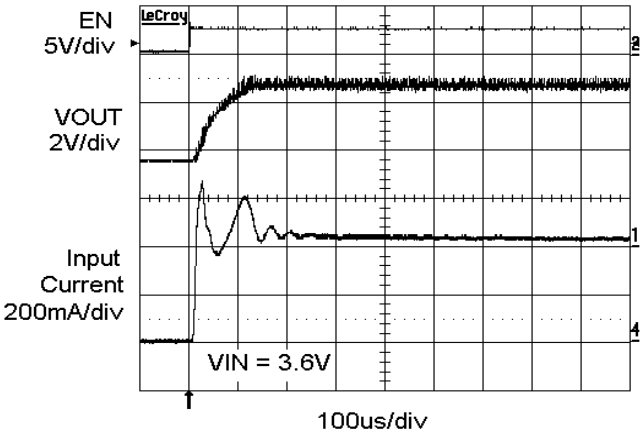

Figure 10. Power−up Transient (2 LEDs at 200 mA)

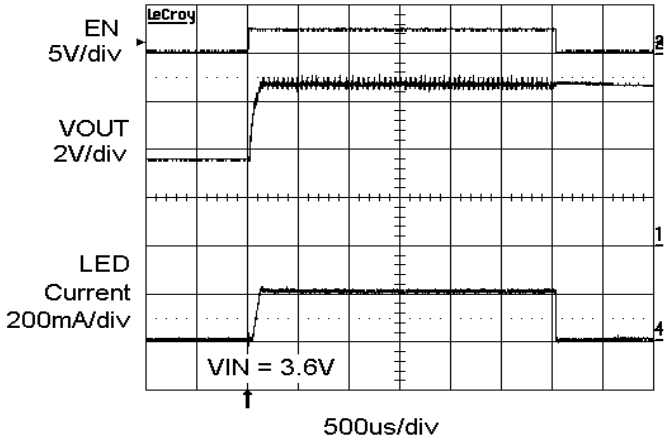

Figure 11. Power−up Transient (2 LEDs at 200 mA)

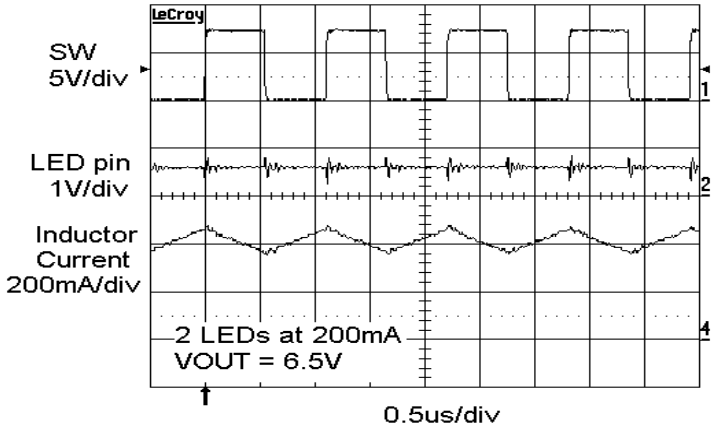

Figure 12. Switching Waveform in Flash Mode (2 LEDs)

TYPICAL CHARACTERISTICS

(VIN = 3.6 V, C_{IN} = 4.7 μF, C_{OUT} = 10 μF, L = 22 μH with 2 LEDs at 100 mA, T_{AMB} = 25°C, unless otherwise specified.)

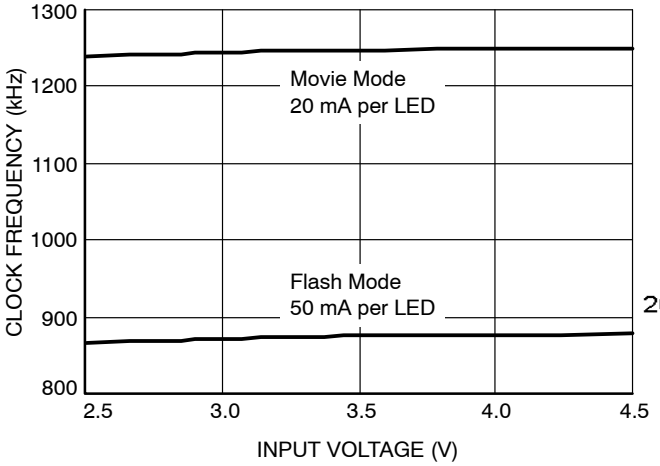

Figure 13. Switching Frequency vs. Supply Voltage

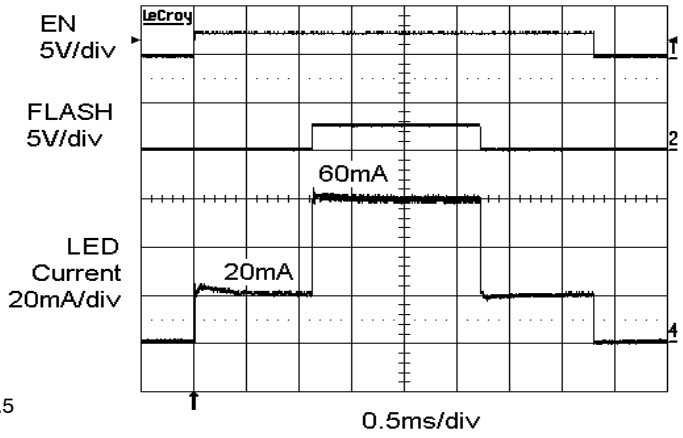

Figure 14. Enable Flash Waveform

Table 4. PIN DESCRIPTION

Pin #	Name	Function
1	FLASH	Logic input, set high to select the flash mode.
2	EN	Enable control logic input (Active High).
3	PGND	Power ground reference.
4	AGND	Analog ground reference.
5	LED2	LED channel 2, connected to the LED cathode.*
6	LED1	LED channel 1, connected to the LED cathode.*
7	RFLASH	Resistor connection to set Flash mode LED current.
8	RSET	Resistor connection to set Movie mode LED current.
9	VIN	Power supply input.
10, 11	SW	Drain connection of low resistance power MOSFET.
12	OVP	Over Voltage Protection comparator input

*LED1 or LED2 pin should not be left floating.

Pin Function

VIN is the supply voltage input. The device is compatible with supply voltages down to 2.8 V and up to 4.2 V. Internal under-voltage lockout (UVLO) circuitry will automatically prevent the device from operating whenever the supply falls below 1.9 V. For operation up to maximum rated loads a bypass ceramic capacitor of 10 μF is recommended between the VIN and GND pins near the device.

EN is the enable logic input (active high). When the pin voltage is taken below 0.4 V, the device enters shutdown mode, drawing nearly zero current. At pin voltages greater than 1.4 V, the device is fully enabled.

FLASH is the logic input (active high) used to control Flash mode operation. When the pin voltage is taken above 1.4 V, the device transitions from Movie mode to Flash mode. When the pin voltage is taken back below 0.4 V, the device returns back to Movie mode operation.

RSET, RFLASH pins allow to set the LED current respectively in Movie and Flash mode. These pins, regulated at 1.2 V, must be connected to a pull-down resistor tied to ground. The LED current is a function of the resistor value.

GND is the ground reference for the driver. The pin must be connected to the ground plane on the PCB.

SW pin is the drain terminal of the internal low resistance power switch. The inductor and the Schottky diode anode should be connected to the SW pin. Traces going to the SW pin should be as short as possible with minimum loop area. This pin contains over-voltage circuitry which becomes active above 18 V. In the event of an “open-LED” fault condition, the device will enter a low power mode and the SW pin will be clamped to approximately 21 V.

LED1, LED2 provide the internal regulated current for each of the LED cathodes. These pins enter a high impedance zero current state whenever the device is placed in shutdown mode. In applications with only one string of LEDs, the two LED pins should be tied together. LED pins should not be left floating.

OVP is the overvoltage protection input pin. When the pin voltage exceeds the 1.2 V overvoltage threshold (V_{OVP}), the driver stops switching. The output VOUT then drops down. As soon as the OVP pin voltage falls under the V_{OVP} threshold, the part starts switching again.

TAB is the exposed pad underneath the package. For best thermal performance, the tab should be soldered to the PCB and connected to the ground plane.

Device Operation

The device is powered from the input pin VIN. A switching frequency of 1.2 MHz is used in Movie mode, when the FLASH input is low. Continuous LED current up to 50 mA is controlled by the RSET resistor. For higher load current, the Flash mode is selected by setting the FLASH input pin high. RFLASH now controls the LED current. In flash mode, the driver efficiency is kept high even under high load current by using a lower switching frequency of 900 kHz. In movie mode, the higher frequency of 1.2 MHz provides a lower noise operation.

Overvoltage Protection (OVP)

To prevent the SW pin voltage from exceeding the internal switch maximum voltage rating, an overvoltage protection (OVP) function is supported. The OVP pin allows to set the maximum operating voltage on the output VOUT using external resistors R1 and R2. The resistor ratio sets the maximum output voltage as shown in the equation below:

$$\frac{R1}{R2} = \left(\frac{VOUT_{MAX}}{1.2}\right) - 1.2$$

$VOUT_{MAX}$ should always be higher than the total LED forward voltage (ΣVf) plus 1.2 V. Also VOUT must be less than ΣVf + 8 V.

$$\Sigma Vf + 1.2\ V < VOUT_{MAX} < \Sigma Vf + 8\ V < 16\ V$$

If the overvoltage protection is not needed, then the OVP pin should be connected to Ground. In that case, the maximum voltage on the SW pin is set to 17 V.

Block Diagram

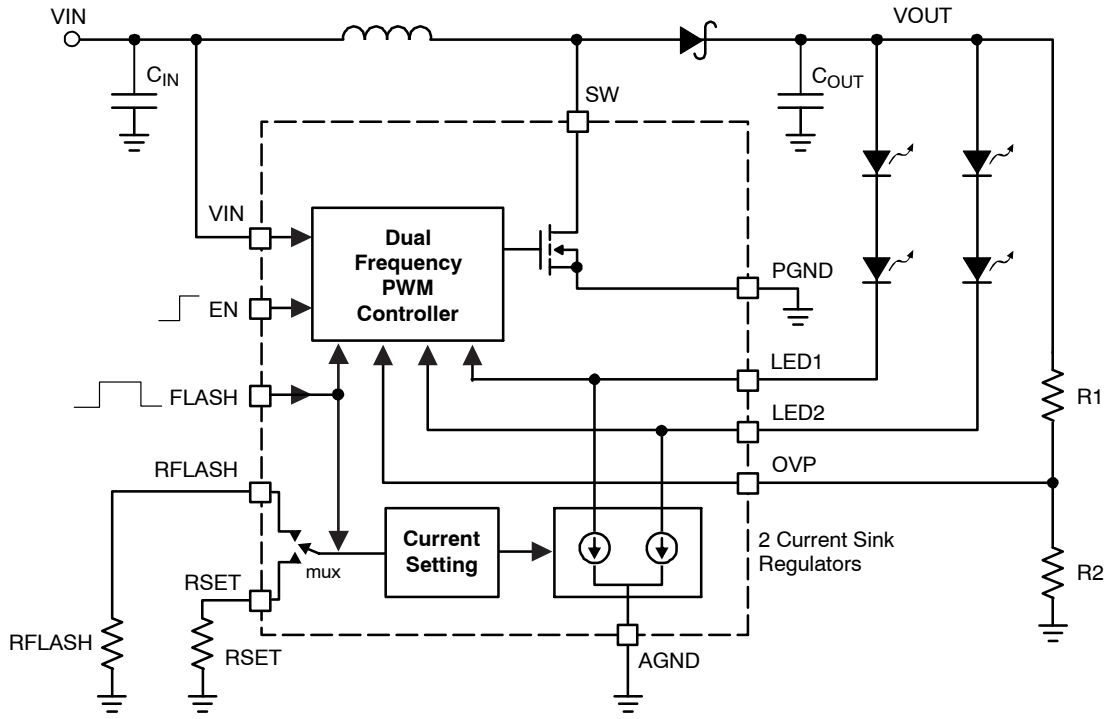

Figure 15. Block Diagram

Application Information

The typical application for the CAT4134 is in a camera−equipped cellular phone where the LEDs are used for illumination in flash mode with short duration high−current pulse and in movie mode with continuous lighter load. In movie mode, the FLASH pin is set low.

NOTE: Hot-plugging the LEDs while the output is fully charged is not recommended. If the LEDs are disconnected, the device should first be powered-down and the output discharged before reconnecting the LEDs to the output and the LED pins.

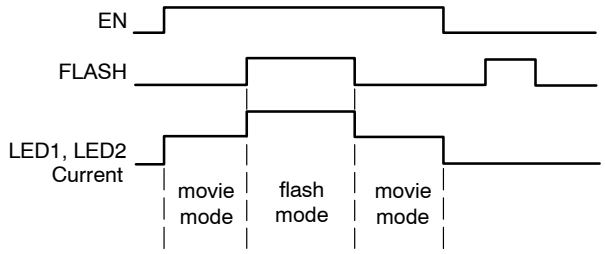

Figure 16. Timing Diagram

LED Current Setting

Flash Mode

The enable EN and FLASH logic input signals control the LED current. When both the EN and FLASH inputs are high, the driver is in flash or strobe mode. In this mode, the LED1 and LED2 pin currents are set by the resistor RFLASH and are regulated to 1800 times the current in the RFLASH resistor and follows the equation:

$$\text{LED current} = 1800 \times \frac{1.2\ \text{V}}{\text{RFLASH}}$$

Movie Mode

When the EN input is high and FLASH is low, the driver is in movie mode. In this mode, the LED1 and LED2 pin currents are set by the resistor RSET and are regulated to 360 times the current in the RSET resistor and follows the equation:

$$\text{LED current} = 360 \times \frac{1.2\ \text{V}}{\text{RSET}}$$

Table 5 lists the various LED currents and the associated resistor values in movie and flash modes.

Table 5.
RESISTOR SELECTION IN MOVIE AND FLASH MODE

Movie Mode			Flash Mode	
LED Current (mA)	RSET (kΩ)		LED Current (mA)	RFLASH (kΩ)
5	86.4		50	43.2
10	43.2		75	28.8
20	21.6		100	21.6
30	14.4		150	14.4

Shutdown Mode

When the EN input is low, the driver is in shutdown mode and there is no current flowing in either LED1 or LED2 pins.

Typical Applications

The CAT4134 can drive one or two strings of 2 to 3 LEDs in series resulting in combinations of 2, 3, 4, 6 LEDs.

The resistor ratio R1/R2 sets the maximum VOUT during an open-LED fault condition and provides the overvoltage protection.

For applications with 2 LEDs in series and $VOUT_{MAX}$ at 10 V, the ratio R1/R2 is 7.

For applications with 3 LEDs in series and $VOUT_{MAX}$ at 13.5 V, the ratio R1/R2 is 10.

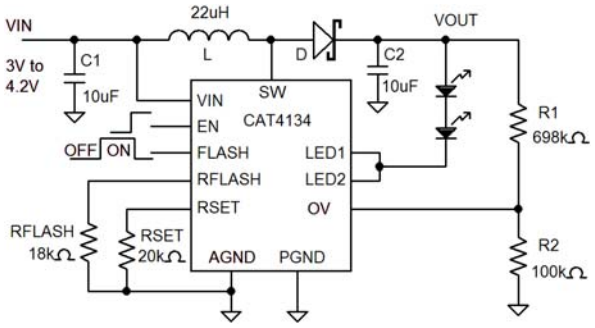

Figure 17. 2 LED Application

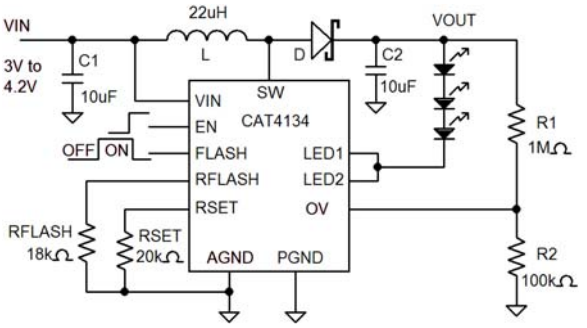

Figure 18. 3 LED Application

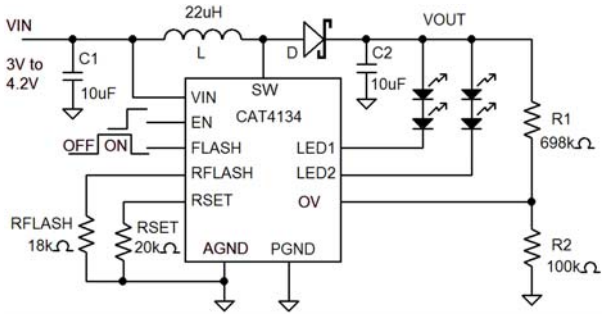

Figure 19. 4 LED Application

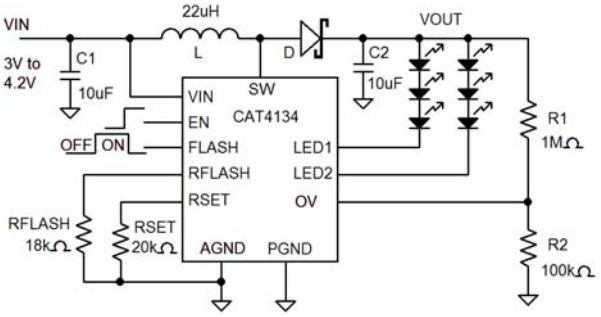

Figure 20. 6 LED Application

PACKAGE DIMENSIONS

TDFN12, 3x3
CASE 511AN−01
ISSUE A

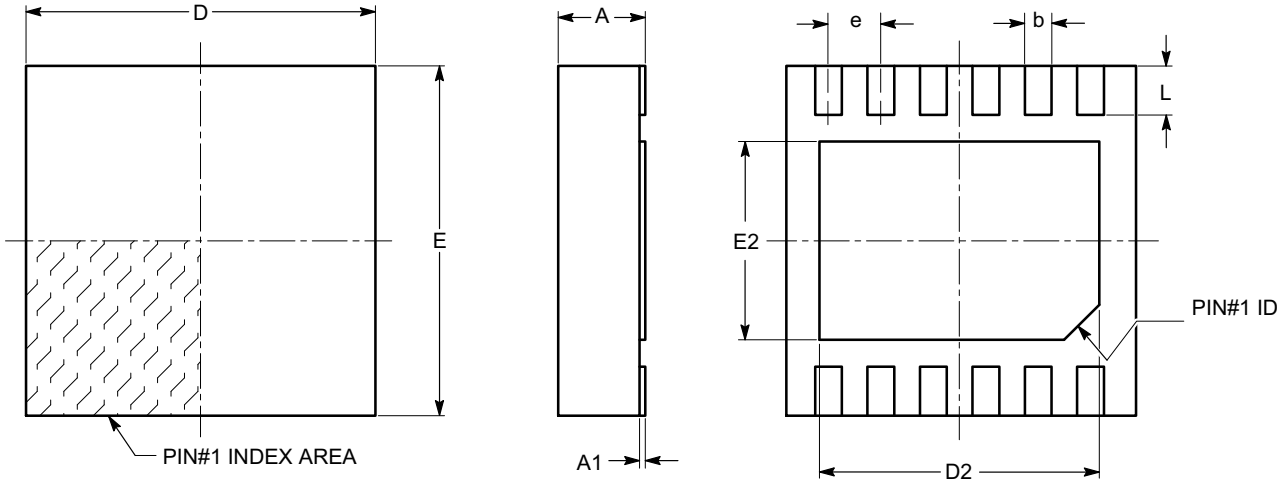

TOP VIEW **SIDE VIEW** **BOTTOM VIEW**

SYMBOL	MIN	NOM	MAX
A	0.70	0.75	0.80
A1	0.00	0.02	0.05
A3	0.178	0.203	0.228
b	0.18	0.23	0.30
D	2.90	3.00	3.10
D2	2.30	2.40	2.50
E	2.90	3.00	3.10
E2	1.55	1.70	1.75
e	0.45 BSC		
L	0.30	0.40	0.50
M	0.25	0.30	0.35
N	0.60	0.70	0.80
P	2.70	3.00	3.10
R	2.25 TYP		

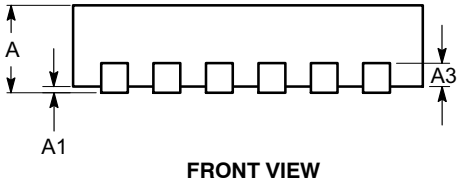

FRONT VIEW

RECOMMENDED LAND PATTERN

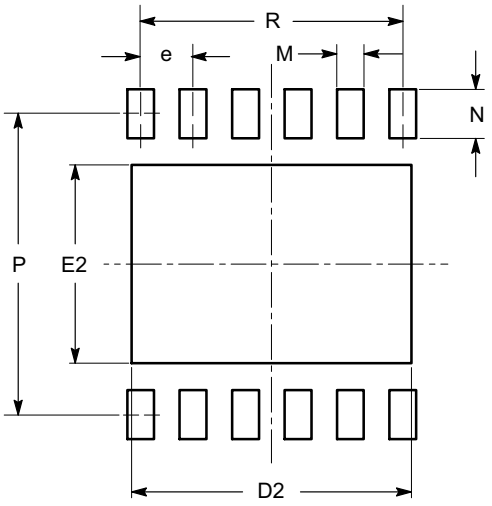

Notes:
(1) All dimensions are in millimeters.
(2) Complies with JEDEC MO-229.

Example of Ordering Information (Note 5)

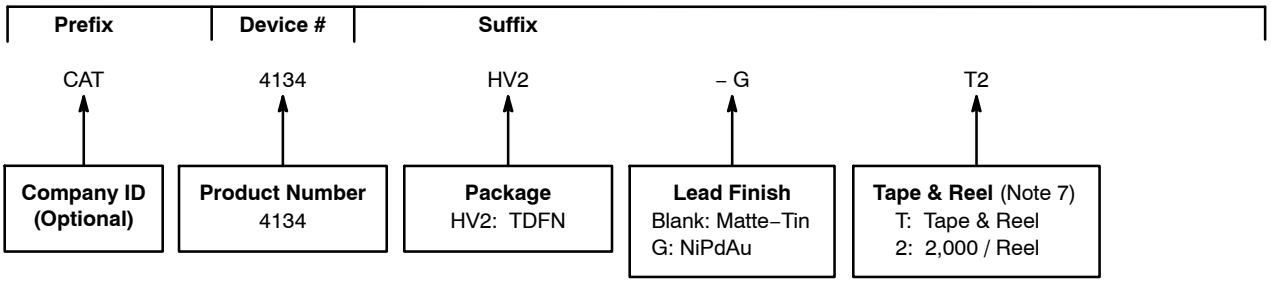

3. All packages are RoHS−compliant (Lead−free, Halogen−free).
4. The standard lead finish is NiPdAu.
5. The device used in the above example is a CAT4134HV2−GT2 (TDFN, NiPdAu, Tape & Reel, 2,000/Reel).
6. For additional package and temperature options, please contact your nearest ON Semiconductor Sales office.
7. For information on tape and reel specifications, including part orientation and tape sizes, please refer to our Tape and Reel Packaging Specifications Brochure, BRD8011/D.

ON Semiconductor and ON are registered trademarks of Semiconductor Components Industries, LLC (SCILLC). SCILLC reserves the right to make changes without further notice to any products herein. SCILLC makes no warranty, representation or guarantee regarding the suitability of its products for any particular purpose, nor does SCILLC assume any liability arising out of the application or use of any product or circuit, and specifically disclaims any and all liability, including without limitation special, consequential or incidental damages. "Typical" parameters which may be provided in SCILLC data sheets and/or specifications can and do vary in different applications and actual performance may vary over time. All operating parameters, including "Typicals" must be validated for each customer application by customer's technical experts. SCILLC does not convey any license under its patent rights nor the rights of others. SCILLC products are not designed, intended, or authorized for use as components in systems intended for surgical implant into the body, or other applications intended to support or sustain life, or for any other application in which the failure of the SCILLC product could create a situation where personal injury or death may occur. Should Buyer purchase or use SCILLC products for any such unintended or unauthorized application, Buyer shall indemnify and hold SCILLC and its officers, employees, subsidiaries, affiliates, and distributors harmless against all claims, costs, damages, and expenses, and reasonable attorney fees arising out of, directly or indirectly, any claim of personal injury or death associated with such unintended or unauthorized use, even if such claim alleges that SCILLC was negligent regarding the design or manufacture of the part. SCILLC is an Equal Opportunity/Affirmative Action Employer. This literature is subject to all applicable copyright laws and is not for resale in any manner.

PUBLICATION ORDERING INFORMATION

LITERATURE FULFILLMENT:
Literature Distribution Center for ON Semiconductor
P.O. Box 5163, Denver, Colorado 80217 USA
Phone: 303−675−2175 or 800−344−3860 Toll Free USA/Canada
Fax: 303−675−2176 or 800−344−3867 Toll Free USA/Canada
Email: orderlit@onsemi.com

N. American Technical Support: 800−282−9855 Toll Free USA/Canada
Europe, Middle East and Africa Technical Support:
Phone: 421 33 790 2910
Japan Customer Focus Center
Phone: 81−3−5773−3850

ON Semiconductor Website: **www.onsemi.com**

Order Literature: http://www.onsemi.com/orderlit

For additional information, please contact your local Sales Representative