CAT3616

6-Channel Charge Pump LED Driver with EZDim™

Description

The CAT3616 is a high efficiency 1x/1.5x fractional charge pump with programmable dimming current in six LED channels. To ensure uniform brightness in LCD backlight applications, each LED channel delivers an accurate regulated current.

Low noise and input ripple is achieved by operating at a constant switching frequency of 1 MHz which allows the use of small external ceramic capacitors. The 1x/1.5x fractional charge pump supports a wide range of input voltages from 3 V to 5.5 V with efficiency up to 91%, and is ideal for Li−Ion battery powered devices.

Two groups of LEDs, main (MAIN1 to MAIN4) and sub (SUB1 and SUB2) are programmable through the $\overline{\text{ENM}}$ (active low) and $\overline{\text{ENS}}$ inputs. Independent current from 1 mA to 31 mA with a 1 mA step are set by toggling the $\overline{\text{ENM}}$ and $\overline{\text{ENS}}$ inputs. The enable EN input pin allows to shutdown the device with zero quiescent current.

The device is available in a 16−pad TQFN package with a max height of 0.8 mm.

Features

- 6 LED Channels with Tight Matching
- Independent Main and Sub Channels
- 1−wire EZDim™ Programmable LED Current
- Accurate 1 mA Dimming Level
- Power Efficiency up to 91%
- Fractional Pump 1x/1.5x
- Low Noise Input Ripple
- Fixed High Frequency Operation 1 MHz
- “Zero” Current Shutdown Mode
- Soft Start and Current Limiting
- Short Circuit Protection
- Thermal Shutdown Protection
- 16−pad TQFN 4 mm x 4 mm Package
- These Devices are Pb−Free, Halogen Free/BFR Free and are RoHS Compliant

Applications

- Main and Sub−display Backlight
- Color LCD and Keypad Backlighting
- Cellular Phones
- Handheld Devices
- Digital Cameras

ON Semiconductor®

http://onsemi.com

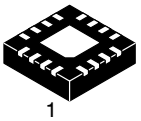

TQFN−16
HV4 SUFFIX
CASE 510AE

PIN CONNECTIONS

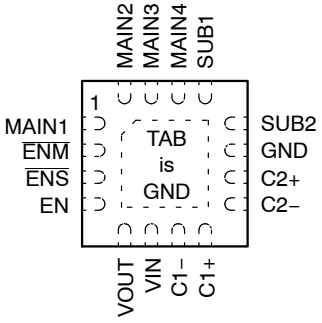

(Top View)

MARKING DIAGRAMS





G616 = CAT3616HV4−T2
CDAH = CAT3616HV4−GT2
A = Assembly Location
XXX = Last Three Digits of Assembly Lot Number
Y = Production Year (Last Digit)
M = Production Month (1-9, A, B, C)
CC = Country of Origin (Two Digit)

Note: Two digit code for country of origin:
Thailand = TH
Malaysia = MY

ORDERING INFORMATION

Device	Package	Shipping
CAT3616HV4−T2 (Note 1)	TQFN−16 (Pb−Free)	2,000/ Tape & Reel
CAT3616HV4−GT2 (Note 2)	TQFN−16 (Pb−Free)	2,000/ Tape & Reel

1. Matte−Tin Plated Finish (RoHS−compliant).
2. NiPdAu Plated Finish (RoHS−compliant).

© Semiconductor Components Industries, LLC, 2010

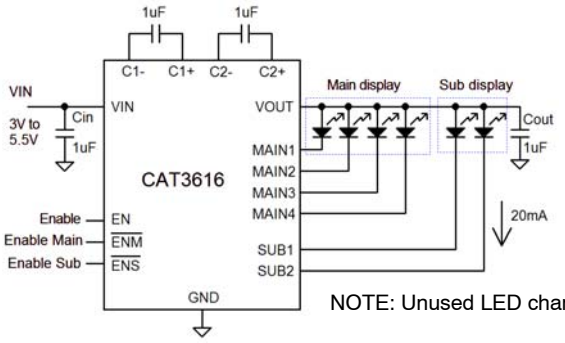

NOTE: Unused LED channels must be connected to VOUT.

Figure 1. Typical Application Circuit

Table 1. ABSOLUTE MAXIMUM RATINGS

Parameter	Rating	Unit
VIN, LEDxx voltage	6	V
VOUT, C1±, C2± voltage	7	V
EN, $\overline{\text{ENM}}$, $\overline{\text{ENS}}$ voltage	VIN + 0.7 V	V
Storage Temperature Range	−65 to +160	°C
Junction Temperature Range	−40 to +150	°C
Lead Temperature	300	°C

Stresses exceeding Maximum Ratings may damage the device. Maximum Ratings are stress ratings only. Functional operation above the Recommended Operating Conditions is not implied. Extended exposure to stresses above the Recommended Operating Conditions may affect device reliability.

Table 2. RECOMMENDED OPERATING CONDITIONS

Parameter	Range	Unit
VIN	3 to 5.5	V
Ambient Temperature Range	−40 to +85	°C
I_{LED} per LED pin	0 to 31	mA
IOUT Total Output Current	0 to 150	mA

NOTE: Typical application circuit with external components is shown above.

Table 3. ELECTRICAL OPERATING CHARACTERISTICS
VIN = 3.6 V, EN = High, ambient temperature of 25°C (over recommended operating conditions unless specified otherwise)

Symbol	Parameter	Conditions	Min	Typ	Max	Unit
I_Q	Quiescent Current	1x mode, all LEDs Off 1x mode, all LEDs On 1.5x mode, all LEDs Off		0.5 2.2 3.5		mA
I_{QSHDN}	Shutdown Current	V_{EN} = 0 V		0	1	μA
I_{LED}	LED Current Range with 6 LEDs		0		31	mA
$I_{LED-ACC}$	LED Current Accuracy	1 mA ≤ I_{LED} ≤ 31 mA		±3		%
$I_{LED-DEV}$	LED Channel Matching	(I_{LED} − I_{LEDAVG}) / I_{LEDAVG}		±3		%
R_{OUT}	Output Resistance (open loop)	1x mode, I_{OUT} = 120 mA 1.5x mode, I_{OUT} = 120 mA		0.5 2.2		Ω
F_{OSC}	Charge Pump Frequency		0.8	1	1.3	MHz
I_{SC_MAX}	Output short circuit Current Limit	V_{OUT} < 0.5 V		60		mA
I_{IN_MAX}	Input Current Limit	1x mode, V_{OUT} > 1 V		300		mA
 $I_{EN/DIM}$ V_{HI} V_{LO}	EN/DIM Pin – Input Leakage – Logic High Level – Logic Low Level		 −1 1.3		 1 0.4	 μA V V
T_{SD}	Thermal Shutdown			165		°C
T_{HYS}	Thermal Hysteresis			20		°C
V_{UVLO}	Undervoltage lock out (UVLO) threshold			2		V

Table 4. RECOMMENDED EN, $\overline{ENM}$ AND $\overline{ENS}$ TIMING
(For 3 V ≤ VIN ≤ 5.5 V, over full ambient temperature range −40 to +125°C.)

Symbol	Parameter	Conditions	Min	Typ	Max	Unit
T_{SETP}	EN setup from shutdown		10			μs
T_{LO}	$\overline{ENM}$, $\overline{ENS}$ program low time		0.3		200	μs
T_{HI}	$\overline{ENM}$, $\overline{ENS}$ program high time		0.3			μs
T_{OFF}	EN low time to shutdown		1.5			ms
T_D	LED current enable			40		μs
T_{DEC}	LED current decrement			0.1		μs

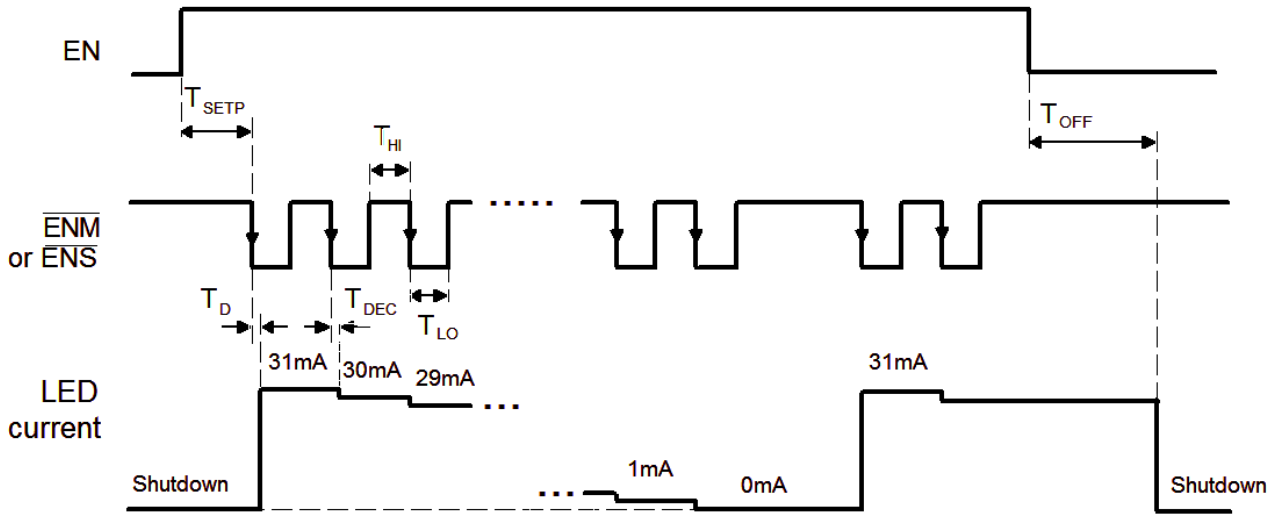

Figure 2. Enable LED Timing Diagram

TYPICAL CHARACTERISTICS

(VIN = 3.6 V, IOUT = 90 mA (6 LEDs at 15 mA), EN = VIN, $\overline{ENM}$ = $\overline{ENS}$ = GND,
C_{IN} = C1 = C2 = C_{OUT} = 1 μF, T_{AMB} = 25°C, unless otherwise specified.)

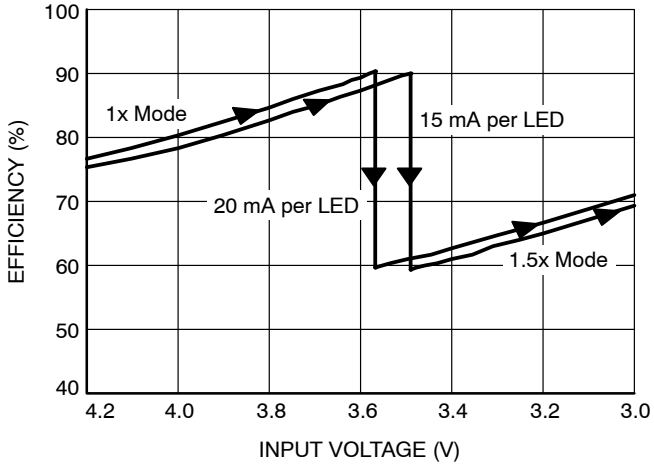

Figure 3. Efficiency vs. Input Voltage (6 LEDs On)

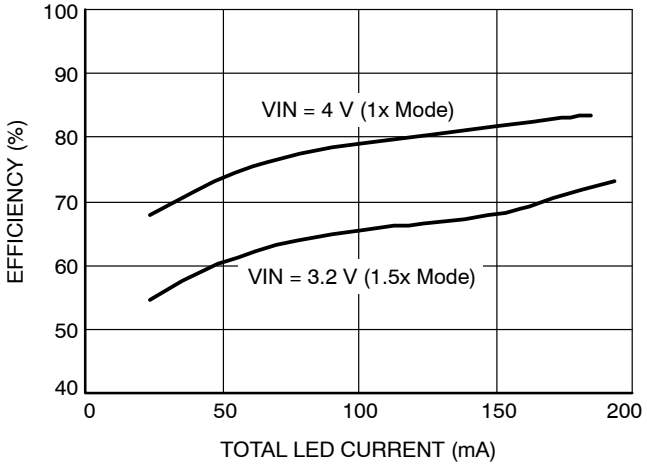

Figure 4. Efficiency vs. Total LED Current (6 LEDs)

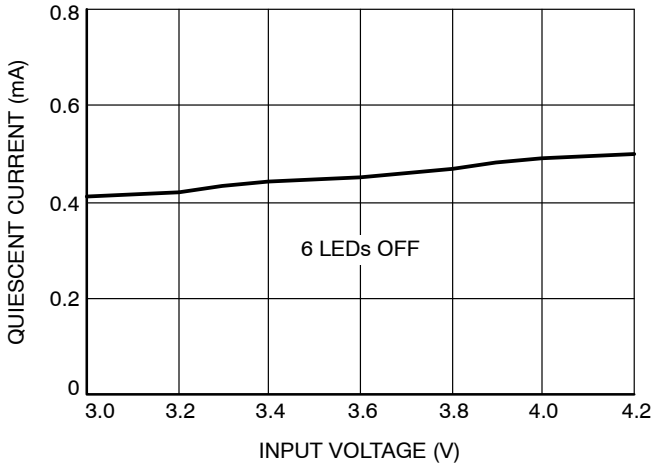

Figure 5. Quiescent Current vs. Input Voltage (1x Mode)

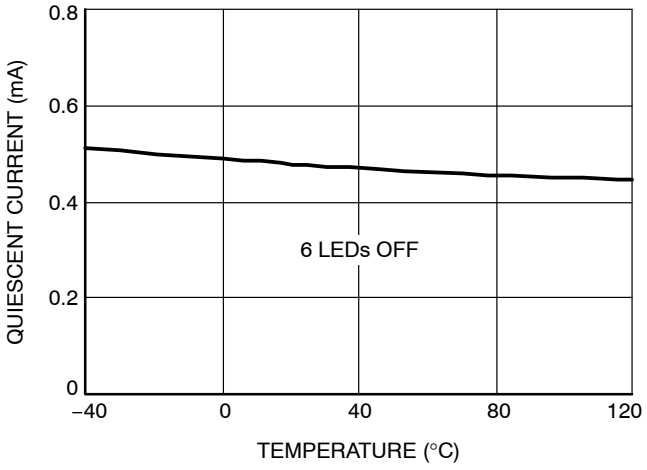

Figure 6. Quiescent Current vs. Temperature (1x Mode)

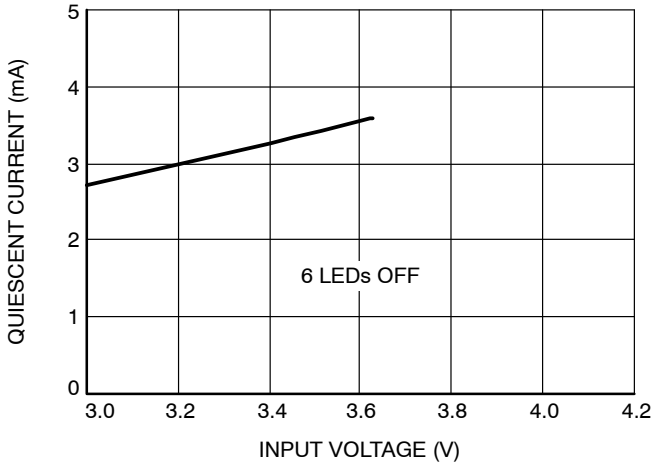

Figure 7. Quiescent Current vs. Input Voltage (1.5x Mode)

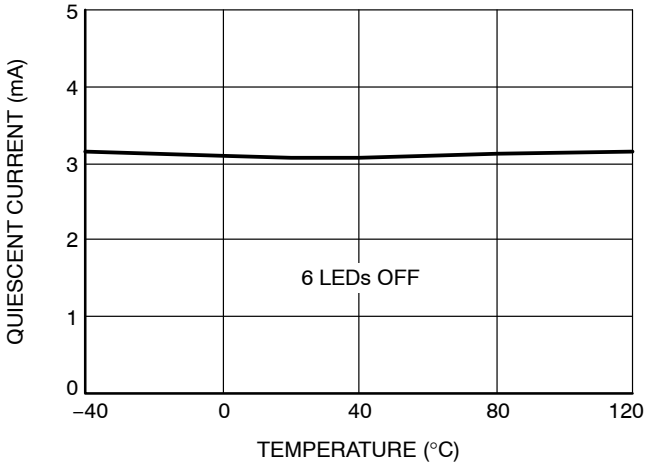

Figure 8. Quiescent Current vs. Temperature (1.5x Mode)

TYPICAL CHARACTERISTICS

(VIN = 3.6 V, IOUT = 90 mA (6 LEDs at 15 mA), EN = VIN, $\overline{ENM}$ = $\overline{ENS}$ = GND, C_{IN} = C1 = C2 = C_{OUT} = 1 μF, T_{AMB} = 25°C, unless otherwise specified.)

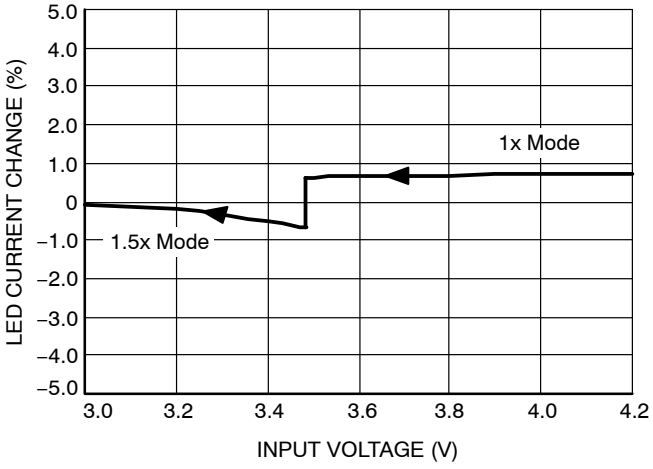

Figure 9. LED Current Change vs. Input Voltage

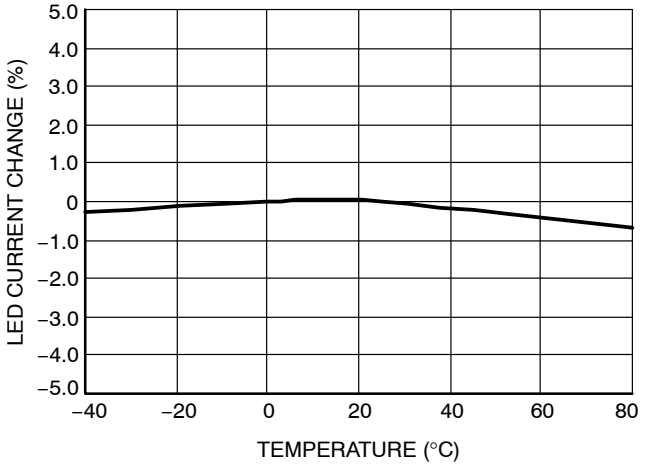

Figure 10. LED Current Change vs. Temperature

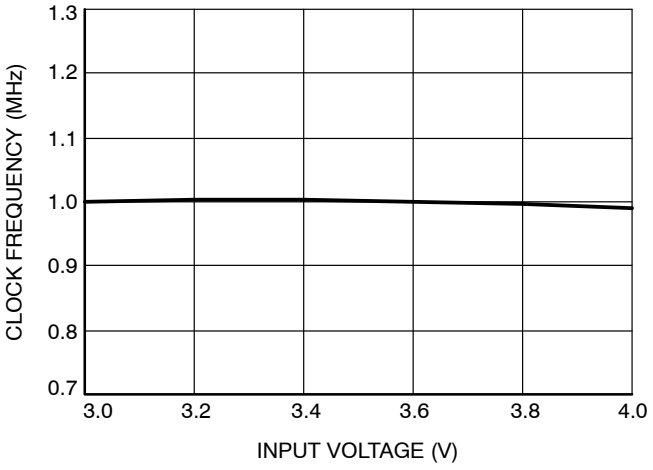

Figure 11. Oscillator Frequency vs. Input Voltage

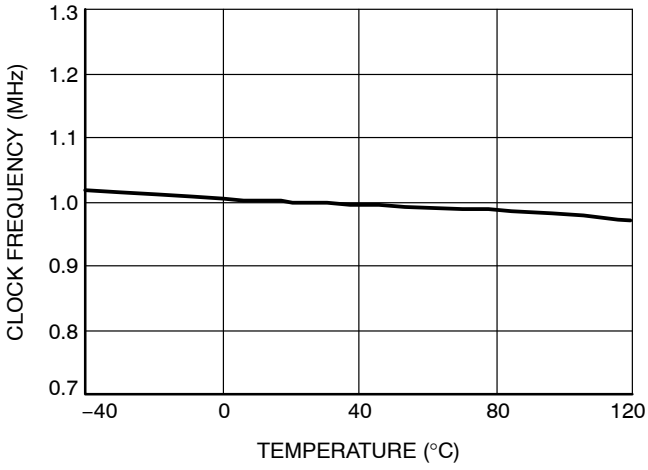

Figure 12. Oscillator Frequency vs. Temperature

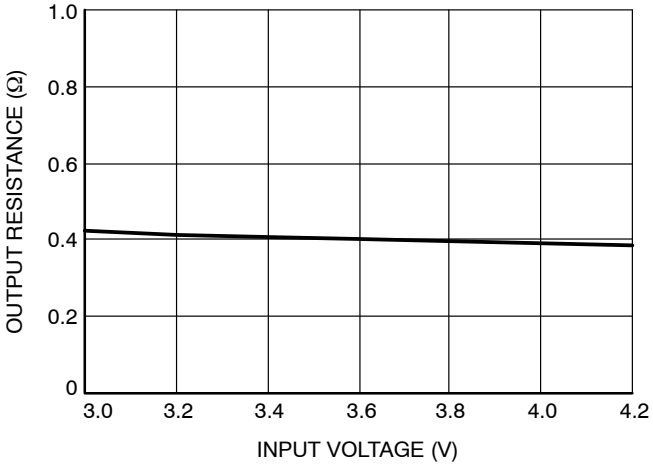

Figure 13. Output Resistance vs. Input Voltage (1x Mode)

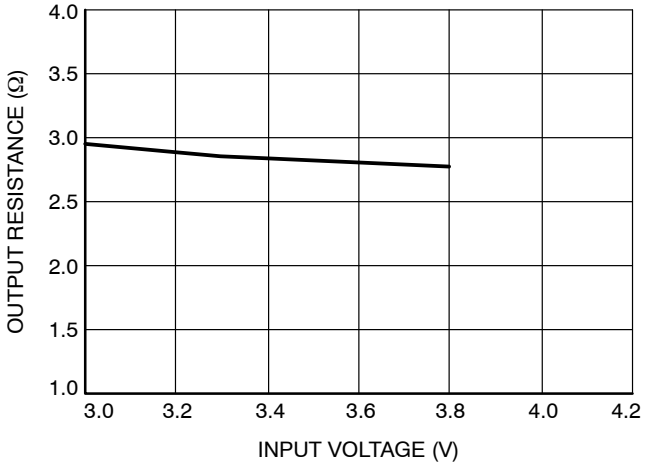

Figure 14. Output Resistance vs. Input Voltage (1.5x Mode)

TYPICAL CHARACTERISTICS

(VIN = 3.6 V, IOUT = 90 mA (6 LEDs at 15 mA), EN = VIN, $\overline{ENM}$ = $\overline{ENS}$ = GND,
C_{IN} = C1 = C2 = C_{OUT} = 1 μF, T_{AMB} = 25°C, unless otherwise specified.)

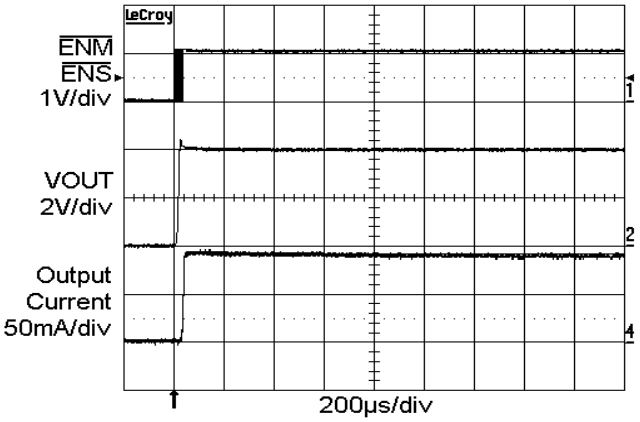

Figure 15. Power Up with 6 LEDs at 15 mA (1x Mode)

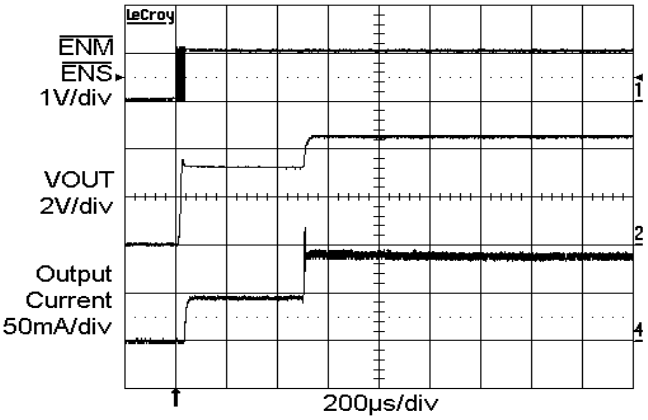

Figure 16. Power Up with 6 LEDs at 15 mA (1.5x Mode)

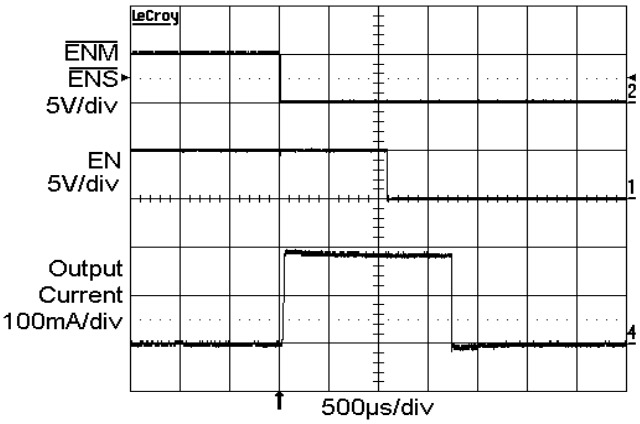

Figure 17. Enable Power Down Delay (1x Mode)

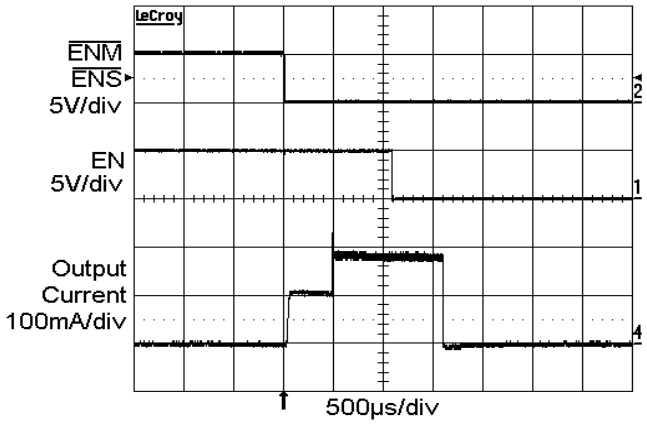

Figure 18. Enable Power Down Delay (1.5x Mode)

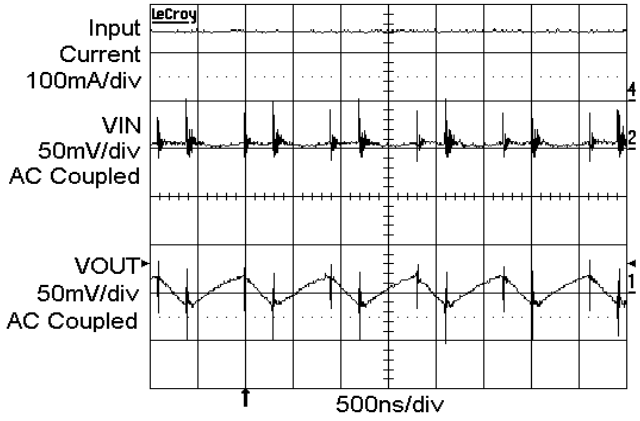

Figure 19. Switching Waveforms in 1.5x Mode

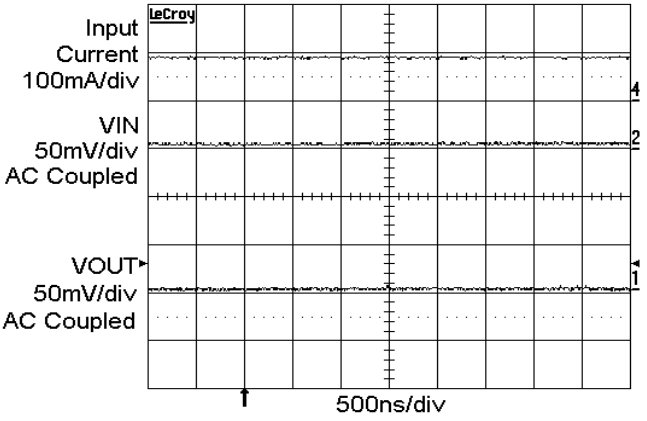

Figure 20. Operating Waveforms in 1x Mode

TYPICAL CHARACTERISTICS

(VIN = 3.6 V, IOUT = 90 mA (6 LEDs at 15 mA), EN = VIN, $\overline{ENM}$ = $\overline{ENS}$ = GND,
C_{IN} = C1 = C2 = C_{OUT} = 1 μF, T_{AMB} = 25°C, unless otherwise specified.)

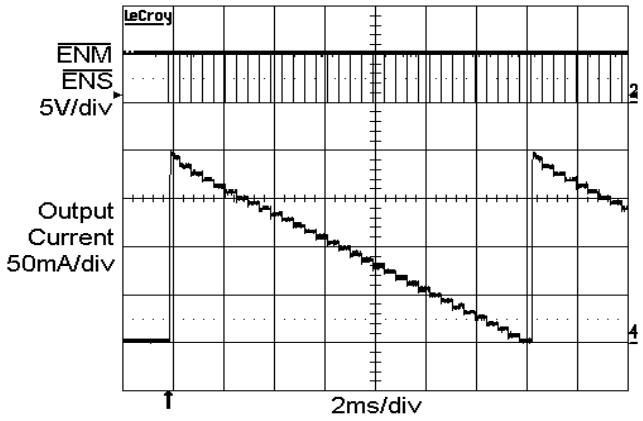

Figure 21. $\overline{ENM}$, $\overline{ENS}$ and Output Current Dimming

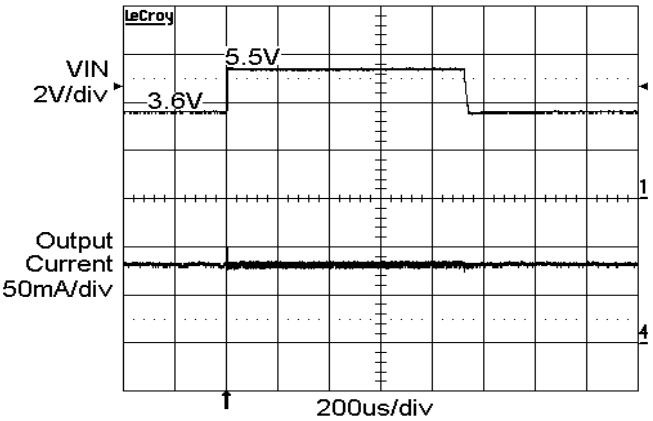

Figure 22. Line Transient Response (3.6 V to 5.5 V) 1x Mode

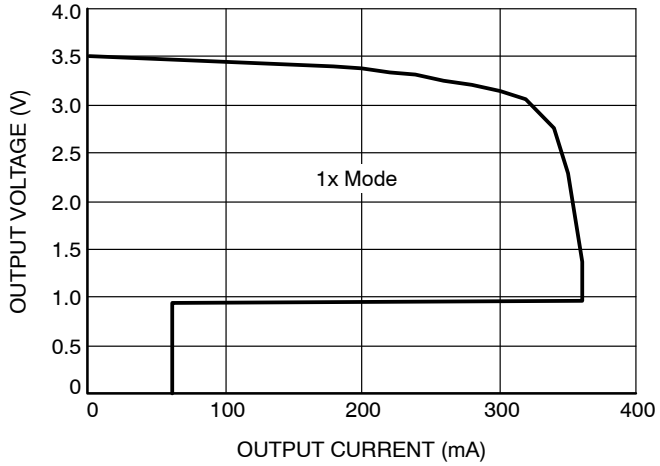

Figure 23. Foldback Current Limit

Table 5. PIN DESCRIPTIONS

Pin #	Name	Function
1	MAIN1	MAIN1 LED cathode terminal (if not used, connect to VOUT) (Note 3)
2	ENM	Enable main LED (MAIN1 to MAIN4) input. Active low
3	ENS	Enable sub LED (SUB1, SUB2) input. Active low
4	EN	Device enable input. Active high.
5	VOUT	Charge pump output connected to the LED anodes
6	VIN	Supply voltage.
7, 8	C1−, C1+	Bucket capacitor 1 terminal
9, 10	C2−, C2+	Bucket capacitor 2 terminal
11	GND	Ground reference
12	SUB2	SUB2 LED cathode terminal (if not used, connect to VOUT) (Note 3)
13	SUB1	SUB1 LED cathode terminal (if not used, connect to VOUT) (Note 3)
14	MAIN4	MAIN4 LED cathode terminal (if not used, connect to VOUT) (Note 3)
15	MAIN3	MAIN3 LED cathode terminal (if not used, connect to VOUT) (Note 3)
16	MAIN2	MAIN2 LED cathode terminal (if not used, connect to VOUT) (Note 3)
TAB	TAB	Connect to Ground on PCB

3. MAIN1 to MAIN4, SUB1, SUB2 pins should not be left floating. They should be connected to the LED cathode, or tied to VOUT pin if not used.

Pin Function

VIN is the supply pin for the charge pump. A small 1 μF ceramic bypass capacitor is required between the VIN pin and ground near the device. The operating input voltage range is up to 5.5 V. When the input supply falls below the undervoltage threshold (2 V), all LED channels are disabled.

EN is the enable logic input. Logic level for high and low are set at 1.3 V and 0.4 V respectively. When EN is initially taken high, the device becomes enabled and all LED currents remain at 0 mA. To place the device into zero current shutdown mode, the EN pin must be held low for 1.5 ms or more.

$\overline{\text{ENM}}$, $\overline{\text{ENS}}$ are the active low enable/ dimming control logic inputs for respectively main and sub LED channels. The falling edge of the first pulse applied to $\overline{\text{ENM}}$ and $\overline{\text{ENS}}$ sets the current for respectively the main and sub LED channels to their full scale of 31 mA. On each consecutive falling edge of the pulse applied to $\overline{\text{ENM}}$ and $\overline{\text{ENS}}$, the LED current is decreased by 1 mA step. On the 32nd pulse, the LED current is set to zero. The next pulse resets the current back to the full scale of 31 mA.

VOUT is the charge pump output that is connected to the LED anodes. A small 1 μF ceramic bypass capacitor is required between the VOUT pin and ground near the device.

GND is the ground reference for the charge pump. The pin must be connected to the ground plane on the PCB.

C1+, C1− are connected to each side of the 1 μF ceramic bucket capacitor C1.

C2+, C2− are connected to each side of the 1 μF ceramic bucket capacitor C2.

MAIN1−4, SUB1−2 provide the internal regulated current for each of the LED cathodes. These pins enter a high impedance zero current state whenever the device is placed in shutdown mode. In applications using less than six LEDs, the unused channels should be wired directly to VOUT. This ensures the channel is automatically disabled dissipating less than 200 μA.

TAB is the exposed pad underneath the package. For best thermal performance, the tab should be soldered to the PCB and connected to the ground plane.

Block Diagram

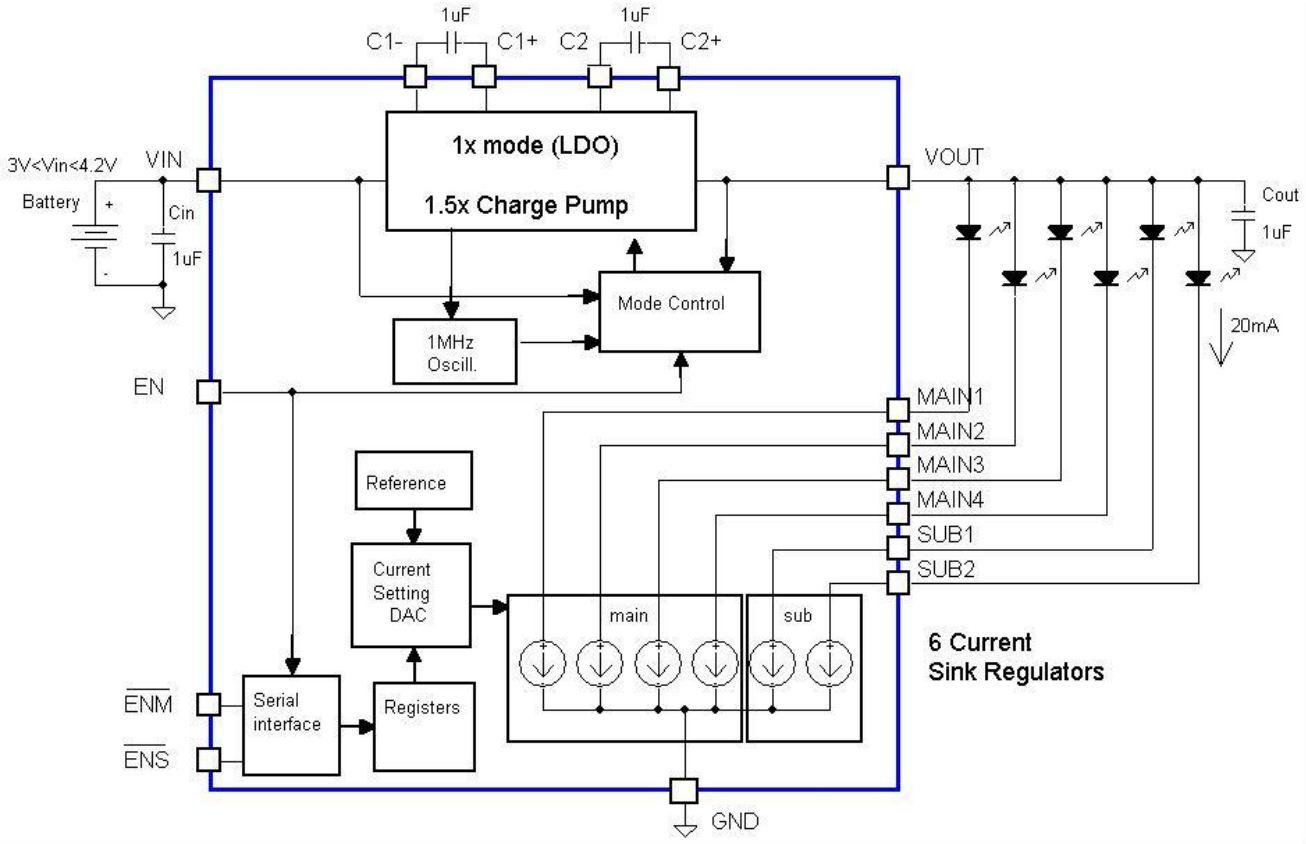

Figure 24. CAT3616 Functional Block Diagram

Basic Operation

At power−up, the CAT3616 starts operating in 1x mode where the output will be approximately equal to the input supply voltage (less any internal voltage losses). If the output voltage is sufficient to regulate all LED currents the device remains in 1x operating mode.

If the input voltage is insufficient or falls to a level where the regulated currents cannot be maintained, the device automatically switches (after 400 μs) into 1.5x mode.

In 1.5x mode, the output is approximately equal to 1.5 times the input supply voltage (less any internal voltage losses).

The above sequence is repeated each and every time the chip is powered−up or is taken out of shutdown mode (via EN pin).

LED Current Setting

The LED current is controlled by toggling the input signals $\overline{\text{ENM}}$ and $\overline{\text{ENS}}$. $\overline{\text{ENM}}$ controls the four LED channels MAIN1 to MAIN4. $\overline{\text{ENS}}$ controls the two LED lines SUB1 and SUB2. $\overline{\text{ENM}}$ and $\overline{\text{ENS}}$ work the same way. The chip must first be enabled by setting the enable input EN high. On the first $\overline{\text{ENM}}$ or $\overline{\text{ENS}}$ transition from high to low, the LED current in the associated LEDs is set to the full scale 31 mA. On each consecutive falling edge of $\overline{\text{ENM}}$ or $\overline{\text{ENS}}$, the LED current is decreased by 1 mA. On the 32nd pulse, the LED channel is turned off and the current drops to 0 mA. One additional $\overline{\text{ENM}}$ or $\overline{\text{ENS}}$ pulse resets the full current to 31 mA, as shown on Figure 2.

Consecutive pulses should be separated by 300 ns or more. Pulsing frequencies from 5 kHz up to 1 MHz are supported during dimming operations. When the EN is held low for 1.5 ms or more, the CAT3616 enters the shutdown mode and draws “zero” current. When the enable EN input is low, toggling $\overline{\text{ENM}}$ or $\overline{\text{ENS}}$ has no effect.

Unused LED channels can be disabled independently by connecting the corresponding main or sub LED pin to VOUT.

Protection Mode

If an LED becomes open−circuit, the output voltage VOUT is internally limited to about 5.5 V. This is to prevent the output pin from exceeding its absolute maximum rating.

The driver enters a thermal shutdown mode as soon as the die temperature exceeds about +165°C. When the device temperature drops down by about 20°C, the device resumes normal operation.

External Components

The driver requires a total of four external 1 μF ceramic capacitors: two for decoupling input and output, and two for the charge pump. Both capacitor types X5R and X7R are recommended for the LED driver application. In the 1.5x charge pump mode, the input current ripple is kept very low by design, and an input bypass capacitor of 1 μF is sufficient. In 1x mode, the device operating in linear mode does not introduce switching noise back onto the supply.

Recommended Layout

In 1.5x charge pump mode, the driver switches internally at a high frequency of 1 MHz. It is recommended to minimize trace length to all four capacitors. A ground plane should cover the area under the driver IC as well as the bypass capacitors. Short connection to ground on capacitors Cin and Cout can be implemented with the use of multiple via. A copper area matching the TDFN exposed pad (GND) must be connected to the ground plane underneath. The use of multiple via improves the package heat dissipation.

Application Information

Single Wire Dimming Application

The dimming control can be achieved through a single wire interface by connecting together all three logic input signals EN, $\overline{ENM}$ and $\overline{ENS}$ as shown on Figure 25.

The common enable signal is set high to enable the driver. On the first negative going pulse, the LEDs turn full on. The pulse low state duration (between the falling and rising edges) must be shorter than 0.5 msec. Any consecutives pulses reduce the LED current by 1 mA. The enable signal is kept low for more than 1.5 msec to turn off all the LED channels and set the driver in shutdown mode, as shown on Figure 26.

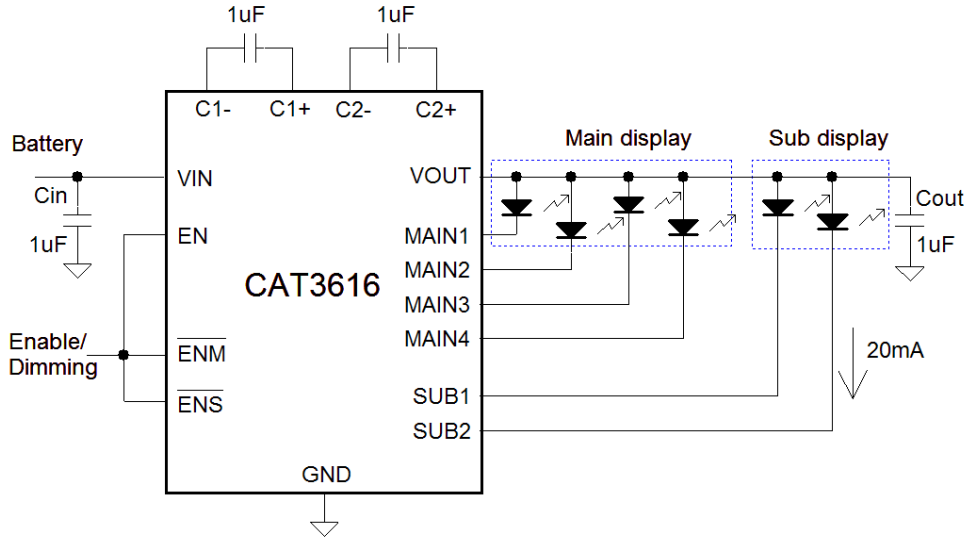

Figure 25. Single Wire Dimming Control

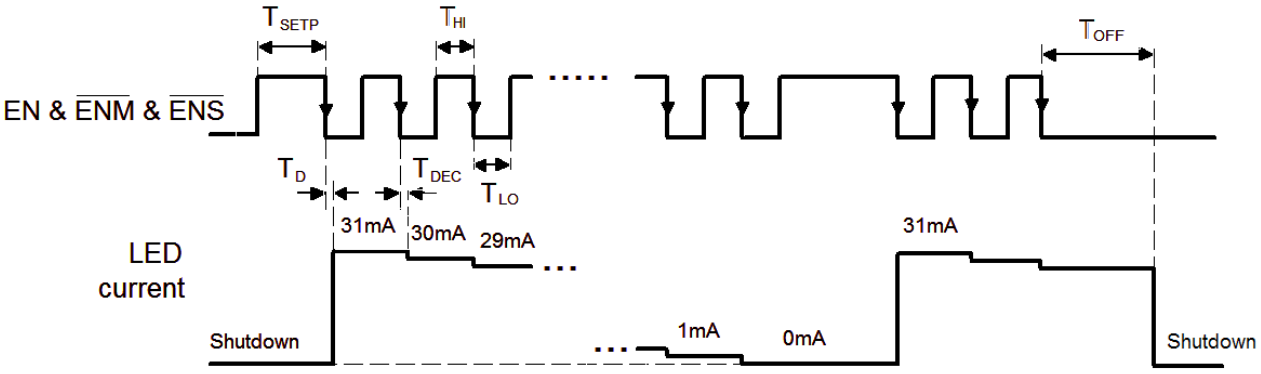

Figure 26. Single Enable Timing Diagram

PACKAGE DIMENSIONS

TQFN16, 4x4
CASE 510AE−01
ISSUE A

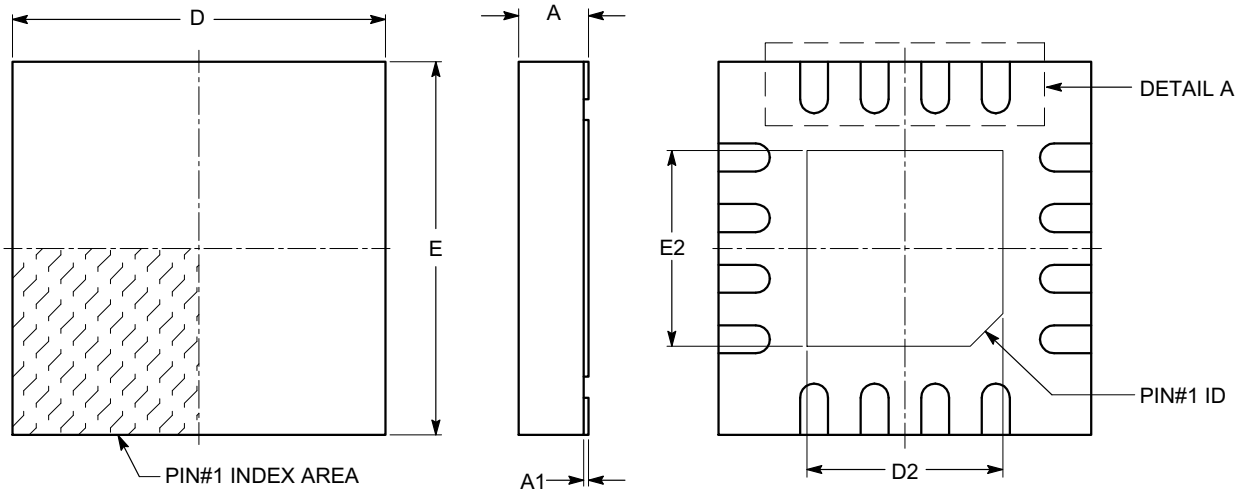

TOP VIEW **SIDE VIEW** **BOTTOM VIEW**

SYMBOL	MIN	NOM	MAX
A	0.70	0.75	0.80
A1	0.00	0.02	0.05
A3		0.20 REF	
b	0.25	0.30	0.35
D	3.90	4.00	4.10
D2	2.00	−−−	2.25
E	3.90	4.00	4.10
E2	2.00	−−−	2.25
e		0.65 BSC	
L	0.45	−−−	0.65

Notes:
(1) All dimensions are in millimeters.
(2) Complies with JEDEC MO-220.

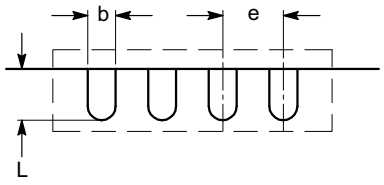

DETAIL A

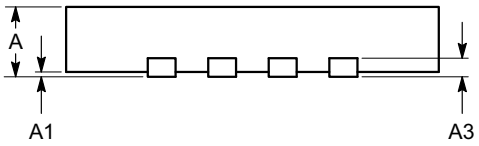

FRONT VIEW

Example of Ordering Information (Note 6)

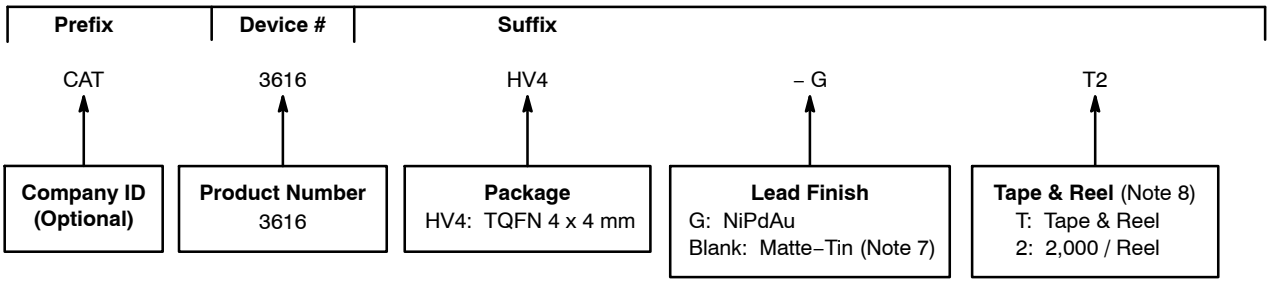

4. All packages are RoHS−compliant (Lead−free, Halogen−free).
5. The standard lead finish is NiPdAu.
6. The device used in the above example is a CAT3616HV4−GT2 (TQFN, NiPdAu Plated Finish, Tape & Reel, 2,000/Reel).
7. For Matte−Tin package option, please contact your nearest ON Semiconductor Sales office.
8. For information on tape and reel specifications, including part orientation and tape sizes, please refer to our Tape and Reel Packaging Specifications Brochure, BRD8011/D.

EZDim is a trademark of Semiconductor Components Industries, LLC.

ON Semiconductor and ON are registered trademarks of Semiconductor Components Industries, LLC (SCILLC). SCILLC reserves the right to make changes without further notice to any products herein. SCILLC makes no warranty, representation or guarantee regarding the suitability of its products for any particular purpose, nor does SCILLC assume any liability arising out of the application or use of any product or circuit, and specifically disclaims any and all liability, including without limitation special, consequential or incidental damages. “Typical” parameters which may be provided in SCILLC data sheets and/or specifications can and do vary in different applications and actual performance may vary over time. All operating parameters, including “Typicals” must be validated for each customer application by customer’s technical experts. SCILLC does not convey any license under its patent rights nor the rights of others. SCILLC products are not designed, intended, or authorized for use as components in systems intended for surgical implant into the body, or other applications intended to support or sustain life, or for any other application in which the failure of the SCILLC product could create a situation where personal injury or death may occur. Should Buyer purchase or use SCILLC products for any such unintended or unauthorized application, Buyer shall indemnify and hold SCILLC and its officers, employees, subsidiaries, affiliates, and distributors harmless against all claims, costs, damages, and expenses, and reasonable attorney fees arising out of, directly or indirectly, any claim of personal injury or death associated with such unintended or unauthorized use, even if such claim alleges that SCILLC was negligent regarding the design or manufacture of the part. SCILLC is an Equal Opportunity/Affirmative Action Employer. This literature is subject to all applicable copyright laws and is not for resale in any manner.

PUBLICATION ORDERING INFORMATION

LITERATURE FULFILLMENT:
Literature Distribution Center for ON Semiconductor
P.O. Box 5163, Denver, Colorado 80217 USA
Phone: 303−675−2175 or 800−344−3860 Toll Free USA/Canada
Fax: 303−675−2176 or 800−344−3867 Toll Free USA/Canada
Email: orderlit@onsemi.com

N. American Technical Support: 800−282−9855 Toll Free USA/Canada
Europe, Middle East and Africa Technical Support:
Phone: 421 33 790 2910
Japan Customer Focus Center
Phone: 81−3−5773−3850

ON Semiconductor Website: **www.onsemi.com**

Order Literature: http://www.onsemi.com/orderlit

For additional information, please contact your local Sales Representative