CAT25080, CAT25160

EEPROM Serial 8/16-Kb SPI

Description

The CAT25080/25160 are a EEPROM Serial 8/16−Kb SPI devices internally organized as 1024x8/2048x8 bits. They feature a 32−byte page write buffer and support the Serial Peripheral Interface (SPI) protocol. The device is enabled through a Chip Select ($\overline{CS}$) input. In addition, the required bus signals are a clock input (SCK), data input (SI) and data output (SO) lines. The $\overline{HOLD}$ input may be used to pause any serial communication with the CAT25080/25160 device. These devices feature software and hardware write protection, including partial as well as full array protection.

Features

- 20 MHz SPI (5 V) Compatible
- 1.8 V to 5.5 V Supply Voltage Range
- SPI Modes (0,0) & (1,1)
- 32−byte Page Write Buffer
- Self−timed Write Cycle
- Hardware and Software Protection
- Block Write Protection
  – Protect 1/4, 1/2 or Entire EEPROM Array
- Low Power CMOS Technology
- 1,000,000 Program/Erase Cycles
- 100 Year Data Retention
- Industrial and Extended Temperature Range
- 8−lead SOIC, TSSOP and 8−pad, UDFN Packages
- These Devices are Pb−Free, Halogen Free/BFR Free, and RoHS Compliant

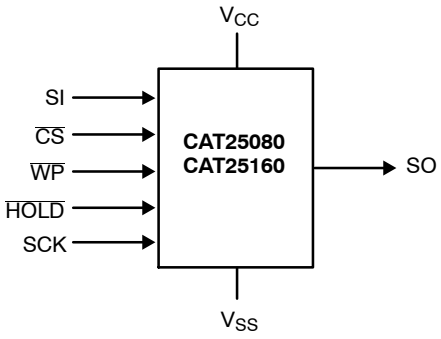

Figure 1. Functional Symbol

ON Semiconductor®

www.onsemi.com

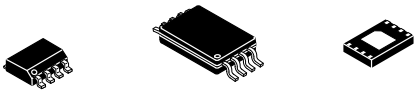

SOIC−8	TSSOP−8	UDFN−8
V SUFFIX	Y SUFFIX	HU4 SUFFIX
CASE 751BD	CASE 948AL	CASE 517AZ

PIN CONFIGURATION

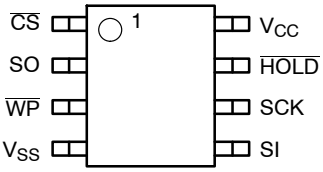

SOIC (V), TSSOP (Y), UDFN (HU2, HU4)

PIN FUNCTION

Pin Name†	Function
$\overline{CS}$	Chip Select
SO	Serial Data Output
$\overline{WP}$	Write Protect
V_{SS}	Ground
SI	Serial Data Input
SCK	Serial Clock
$\overline{HOLD}$	Hold Transmission Input
V_{CC}	Power Supply

†The exposed pad for the UDFN packages can be left floating or connected to Ground.

ORDERING INFORMATION

See detailed ordering and shipping information in the package dimensions section on page 11 of this data sheet.

© Semiconductor Components Industries, LLC, 2012

Table 1. ABSOLUTE MAXIMUM RATINGS

Parameters	Ratings	Units
Operating Temperature	−45 to +130	°C
Storage Temperature	−65 to +150	°C
Voltage on any Pin with Respect to Ground (Note 1)	−0.5 to V_{CC} + 0.5	V

Stresses exceeding those listed in the Maximum Ratings table may damage the device. If any of these limits are exceeded, device functionality should not be assumed, damage may occur and reliability may be affected.

1. The DC input voltage on any pin should not be lower than −0.5 V or higher than V_{CC} + 0.5 V. During transitions, the voltage on any pin may undershoot to no less than −1.5 V or overshoot to no more than V_{CC} + 1.5 V, for periods of less than 20 ns.

Table 2. RELIABILITY CHARACTERISTICS (Note 2)

Symbol	Parameter	Min	Units
N_{END} (Note 3)	Endurance	1,000,000	Program / Erase Cycles
T_{DR}	Data Retention	100	Years

2. These parameters are tested initially and after a design or process change that affects the parameter according to appropriate AEC−Q100 and JEDEC test methods.
3. Page Mode, V_{CC} = 5 V, 25°C.

Table 3. D.C. OPERATING CHARACTERISTICS

(V_{CC} = 1.8 V to 5.5 V, T_A = −40°C to +85°C and V_{CC} = 2.5 V to 5.5 V, T_A = −40°C to +125°C unless otherwise specified.)

Symbol	Parameter	Test Conditions		Min	Max	Units
I_{CC}	Supply Current	Read, Write, V_{CC} = 5.0 V, SO open	10 MHz / −40°C to +85°C		2	mA
			5 MHz / −40°C to +125°C		2	mA
I_{SB1}	Standby Current	V_{IN} = GND or V_{CC}, $\overline{CS}$ = V_{CC}, $\overline{WP}$ = V_{CC}, V_{CC} = 5.0 V			2	μA
I_{SB2}	Standby Current	V_{IN} = GND or V_{CC}, $\overline{CS}$ = V_{CC}, $\overline{WP}$ = GND, V_{CC} = 5.0 V	T_A = −40°C to +85°C		4	μA
			T_A = −40°C to +125°C		5	μA
I_L	Input Leakage Current	V_{IN} = GND or V_{CC}		−2	2	μA
I_{LO}	Output Leakage Current	$\overline{CS}$ = V_{CC}, V_{OUT} = GND or V_{CC}	T_A = −40°C to +85°C	−1	1	μA
			T_A = −40°C to +125°C	−1	2	μA
V_{IL}	Input Low Voltage			−0.5	0.3 V_{CC}	V
V_{IH}	Input High Voltage			0.7 V_{CC}	V_{CC} + 0.5	V
V_{OL1}	Output Low Voltage	V_{CC} > 2.5 V, I_{OL} = 3.0 mA			0.4	V
V_{OH1}	Output High Voltage	V_{CC} > 2.5 V, I_{OH} = −1.6 mA		V_{CC} − 0.8 V		V
V_{OL2}	Output Low Voltage	V_{CC} > 1.8 V, I_{OL} = 150 μA			0.2	V
V_{OH2}	Output High Voltage	V_{CC} > 1.8 V, I_{OH} = −100 μA		V_{CC} − 0.2 V		V

Table 4. PIN CAPACITANCE (Note 2) (T_A = 25°C, f = 1.0 MHz, V_{CC} = +5.0 V)

Symbol	Test	Conditions	Min	Typ	Max	Units
C_{OUT}	Output Capacitance (SO)	V_{OUT} = 0 V			8	pF
C_{IN}	Input Capacitance ($\overline{CS}$, SCK, SI, $\overline{WP}$, $\overline{HOLD}$)	V_{IN} = 0 V			8	pF

Table 5. A.C. CHARACTERISTICS – Mature Product
(T_A = −40°C to +85°C (Industrial) and T_A = −40°C to +125°C (Extended)) (Notes 4, 7)

Symbol	Parameter	V_{CC} = 1.8 V – 5.5 V		V_{CC} = 2.5 V – 5.5 V, T_A = −40°C to +85°C		Units
		Min	Max	Min	Max	
f_{SCK}	Clock Frequency	DC	5	DC	10	MHz
t_{SU}	Data Setup Time	40		20		ns
t_H	Data Hold Time	40		20		ns
t_{WH}	SCK High Time	75		40		ns
t_{WL}	SCK Low Time	75		40		ns
t_{LZ}	$\overline{HOLD}$ to Output Low Z		50		25	ns
t_{RI} (Note 5)	Input Rise Time		2		2	μs
t_{FI} (Note 5)	Input Fall Time		2		2	μs
t_{HD}	$\overline{HOLD}$ Setup Time	0		0		ns
t_{CD}	$\overline{HOLD}$ Hold Time	10		10		ns
t_V	Output Valid from Clock Low		75		40	ns
t_{HO}	Output Hold Time	0		0		ns
t_{DIS}	Output Disable Time		50		20	ns
t_{HZ}	$\overline{HOLD}$ to Output High Z		100		25	ns
t_{CS}	$\overline{CS}$ High Time	50		20		ns
t_{CSS}	$\overline{CS}$ Setup Time	20		15		ns
t_{CSH}	$\overline{CS}$ Hold Time	30		20		ns
t_{CNS}	$\overline{CS}$ Inactive Setup Time	20		15		ns
t_{CNH}	$\overline{CS}$ Inactive Hold Time	20		15		ns
t_{WPS}	$\overline{WP}$ Setup Time	10		10		ns
t_{WPH}	$\overline{WP}$ Hold Time	100		60		ns
t_{WC} (Note 6)	Write Cycle Time		5		5	ms

4. AC Test Conditions:
   Input Pulse Voltages: 0.3 V_{CC} to 0.7 V_{CC}
   Input rise and fall times: ≤ 10 ns
   Input and output reference voltages: 0.5 V_{CC}
   Output load: current source $I_{OL\ max}/I_{OH\ max}$; C_L = 50 pF
5. This parameter is tested initially and after a design or process change that affects the parameter.
6. t_{WC} is the time from the rising edge of $\overline{CS}$ after a valid write sequence to the end of the internal write cycle.
7. **All Chip Select (CS) timing parameters are defined relative to the positive clock edge (Figure 2). t_{CSH} timing specification is valid for die revision C and higher. The die revision C is identified by letter "C" or a dedicated marking code on top of the package. For previous product revision (Rev. B) the t_{CSH} is defined relative to the negative clock edge.**

Table 6. POWER−UP TIMING (Notes 5, 8)

Symbol	Parameter	Max	Units
t_{PUR}	Power−up to Read Operation	1	ms
t_{PUW}	Power−up to Write Operation	1	ms

8. t_{PUR} and t_{PUW} are the delays required from the time V_{CC} is stable until the specified operation can be initiated.

Table 7. A.C. CHARACTERISTICS – New Product (Rev D)
(T_A = −40°C to +85°C (Industrial) and T_A = −40°C to +125°C (Extended), unless otherwise specified.) (Note 9)

Symbol	Parameter	V_{CC} = 1.8 V – 5.5 V −40°C to +85°C		V_{CC} = 2.5 V – 5.5 V −40°C to +125°C		V_{CC} = 4.5 V – 5.5 V −40°C to +85°C		Units
		Min	Max	Min	Max	Min	Max	
f_{SCK}	Clock Frequency	DC	5	DC	10	DC	20	MHz
t_{SU}	Data Setup Time	20		10		5		ns
t_H	Data Hold Time	20		10		5		ns
t_{WH}	SCK High Time	75		40		20		ns
t_{WL}	SCK Low Time	75		40		20		ns
t_{LZ}	$\overline{HOLD}$ to Output Low Z		50		25		25	ns
t_{RI} (Note 10)	Input Rise Time		2		2		2	μs
t_{FI} (Note 10)	Input Fall Time		2		2		2	μs
t_{HD}	$\overline{HOLD}$ Setup Time	0		0		0		ns
t_{CD}	$\overline{HOLD}$ Hold Time	10		10		5		ns
t_V	Output Valid from Clock Low		70		35		20	ns
t_{HO}	Output Hold Time	0		0		0		ns
t_{DIS}	Output Disable Time		50		20		20	ns
t_{HZ}	$\overline{HOLD}$ to Output High Z		100		25		25	ns
t_{CS}	$\overline{CS}$ High Time	80		40		20		ns
t_{CSS}	$\overline{CS}$ Setup Time	30		30		15		ns
t_{CSH}	$\overline{CS}$ Hold Time	30		30		20		ns
t_{CNS}	$\overline{CS}$ Inactive Setup Time	20		20		15		ns
t_{CNH}	$\overline{CS}$ Inactive Hold Time	20		20		15		ns
t_{WPS}	$\overline{WP}$ Setup Time	10		10		10		ns
t_{WPH}	$\overline{WP}$ Hold Time	10		10		10		ns
t_{WC} (Note 12)	Write Cycle Time		5		5		5	ms

Table 8. POWER−UP TIMING (Notes 10, 11)

Symbol	Parameter	Min	Max	Units
t_{PUR}	Power−up to Read Operation	0.1	1	ms
t_{PUW}	Power−up to Write Operation	0.1	1	ms

9. AC Test Conditions:
   Input Pulse Voltages: 0.3 V_{CC} to 0.7 V_{CC}
   Input rise and fall times: ≤ 10 ns
   Input and output reference voltages: 0.5 V_{CC}
   Output load: current source $I_{OL\ max}/I_{OH\ max}$; C_L = 30 pF

10. This parameter is tested initially and after a design or process change that affects the parameter.

11. t_{PUR} and t_{PUW} are the delays required from the time V_{CC} is stable at the operating voltage until the specified operation can be initiated.

12. t_{WC} is the time from the rising edge of $\overline{CS}$ after a valid write sequence to the end of the internal write cycle.

Pin Description

SI: The serial data input pin accepts op−codes, addresses and data. In SPI modes (0,0) and (1,1) input data is latched on the rising edge of the SCK clock input.

SO: The serial data output pin is used to transfer data out of the device. In SPI modes (0,0) and (1,1) data is shifted out on the falling edge of the SCK clock.

SCK: The serial clock input pin accepts the clock provided by the host and used for synchronizing communication between host and CAT25080/160.

$\overline{CS}$: The chip select input pin is used to enable/disable the CAT25080/160. When $\overline{CS}$ is high, the SO output is tri−stated (high impedance) and the device is in Standby Mode (unless an internal write operation is in progress). *Every communication session between host and CAT25080/160 must be preceded by a high to low transition and concluded with a low to high transition of the $\overline{CS}$ input.*

$\overline{WP}$: The write protect input pin will allow all write operations to the device when held high. When $\overline{WP}$ pin is tied low and the WPEN bit in the Status Register (refer to Status Register description, later in this Data Sheet) is set to "1", writing to the Status Register is disabled.

$\overline{HOLD}$: The $\overline{HOLD}$ input pin is used to pause transmission between host and CAT25080/160, without having to retransmit the entire sequence at a later time. To pause, $\overline{HOLD}$ must be taken low and to resume it must be taken back high, with the SCK input low during both transitions. When not used for pausing, the $\overline{HOLD}$ input should be tied to V_{CC}, either directly or through a resistor.

Functional Description

The CAT25080/160 devices support the Serial Peripheral Interface (SPI) bus protocol, modes (0,0) and (1,1). The device contains an 8−bit instruction register. The instruction set and associated op−codes are listed in Table 9.

Reading data stored in the CAT25080/160 is accomplished by simply providing the READ command and an address. Writing to the CAT25080/160, in addition to a WRITE command, address and data, also requires enabling the device for writing by first setting certain bits in a Status Register, as will be explained later.

After a high to low transition on the $\overline{CS}$ input pin, the CAT25080/160 will accept any one of the six instruction op−codes listed in Table 9 and will ignore all other possible 8−bit combinations. The communication protocol follows the timing from Figure 2.

Table 9. INSTRUCTION SET

Instruction	Opcode	Operation
WREN	0000 0110	Enable Write Operations
WRDI	0000 0100	Disable Write Operations
RDSR	0000 0101	Read Status Register
WRSR	0000 0001	Write Status Register
READ	0000 0011	Read Data from Memory
WRITE	0000 0010	Write Data to Memory

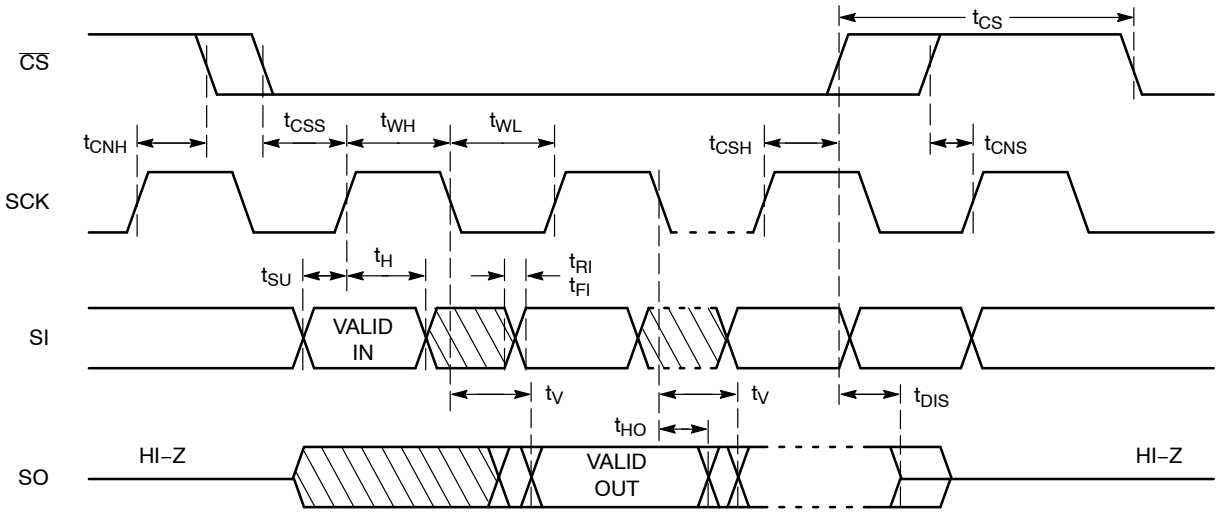

Figure 2. Synchronous Data Timing

Status Register

The Status Register, as shown in Table 10, contains a number of status and control bits.

The $\overline{RDY}$ (Ready) bit indicates whether the device is busy with a write operation. This bit is automatically set to 1 during an internal write cycle, and reset to 0 when the device is ready to accept commands. For the host, this bit is read only.

The WEL (Write Enable Latch) bit is set/reset by the WREN/WRDI commands. When set to 1, the device is in a Write Enable state and when set to 0, the device is in a Write Disable state.

The BP0 and BP1 (Block Protect) bits determine which blocks are currently write protected. They are set by the user with the WRSR command and are non−volatile. The user is allowed to protect a quarter, one half or the entire memory, by setting these bits according to Table 11. The protected blocks then become read−only.

Table 10. STATUS REGISTER

7	6	5	4	3	2	1	0
WPEN	0	0	0	BP1	BP0	WEL	$\overline{\text{RDY}}$

Table 11. BLOCK PROTECTION BITS

Status Register Bits		Array Address Protected	Protection
BP1	BP0		
0	0	None	No Protection
0	1	25080: 0300−03FF 25160: 0600−07FF	Quarter Array Protection
1	0	25080: 0200−03FF 25160: 0400−07FF	Half Array Protection
1	1	25080: 0000−03FF 25160: 0000−07FF	Full Array Protection

Table 12. WRITE PROTECT CONDITIONS

WPEN	$\overline{\text{WP}}$	WEL	Protected Blocks	Unprotected Blocks	Status Register
0	X	0	Protected	Protected	Protected
0	X	1	Protected	Writable	Writable
1	Low	0	Protected	Protected	Protected
1	Low	1	Protected	Writable	Protected
X	High	0	Protected	Protected	Protected
X	High	1	Protected	Writable	Writable

WRITE OPERATIONS

The CAT25080/160 device powers up into a write disable state. The device contains a Write Enable Latch (WEL) which must be set before attempting to write to the memory array or to the status register. In addition, the address of the memory location(s) to be written must be outside the protected area, as defined by BP0 and BP1 bits from the status register.

Write Enable and Write Disable

The internal Write Enable Latch and the corresponding Status Register WEL bit are set by sending the WREN instruction to the CAT25080/160. Care must be taken to take the $\overline{CS}$ input high after the WREN instruction, as otherwise the Write Enable Latch will not be properly set. WREN timing is illustrated in Figure 3. The WREN instruction must be sent prior to any WRITE or WRSR instruction.

The internal write enable latch is reset by sending the WRDI instruction as shown in Figure 4. Disabling write operations by resetting the WEL bit, will protect the device against inadvertent writes.

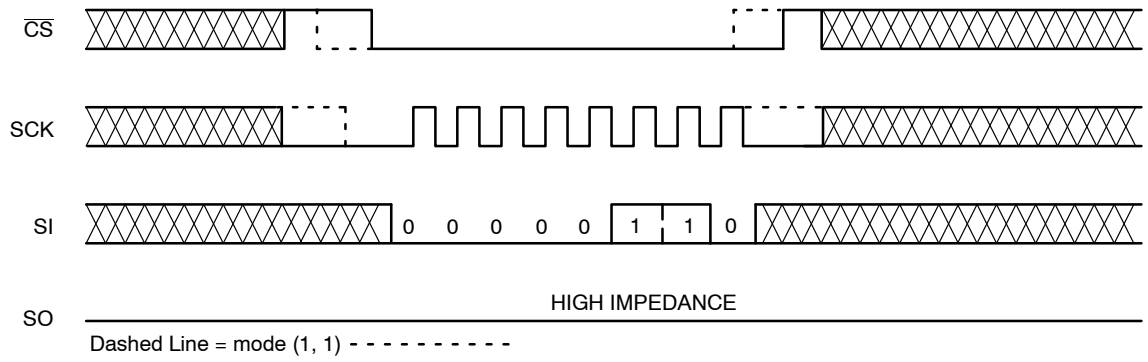

Figure 3. WREN Timing

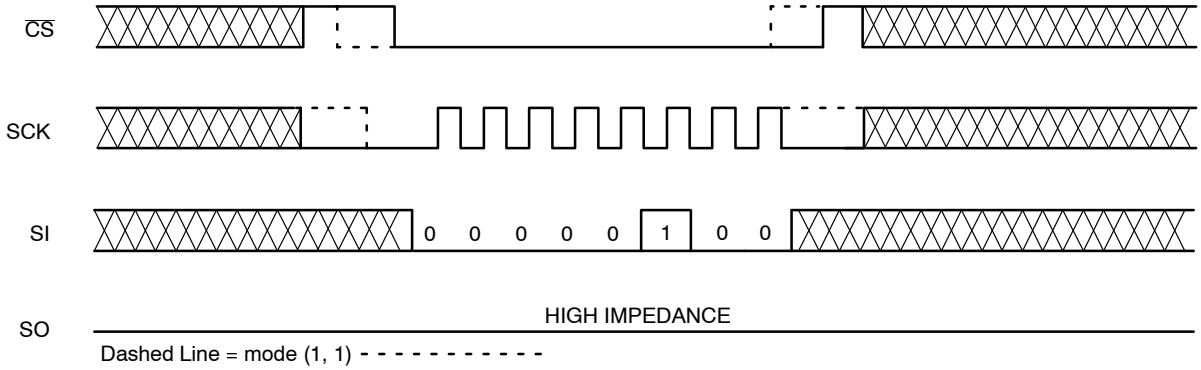

Figure 4. WRDI Timing

Byte Write

Once the WEL bit is set, the user may execute a write sequence, by sending a WRITE instruction, a 16−bit address and data as shown in Figure 5. Only 10 significant address bits are used by the CAT25080 and 11 by the CAT25160. The rest are don't care bits, as shown in Table 13. Internal programming will start after the low to high $\overline{CS}$ transition. During an internal write cycle, all commands, except for RDSR (Read Status Register) will be ignored. The $\overline{RDY}$ bit will indicate if the internal write cycle is in progress ($\overline{RDY}$ high), or the device is ready to accept commands ($\overline{RDY}$ low).

Page Write

After sending the first data byte to the CAT25080/160, the host may continue sending data, up to a total of 32 bytes, according to timing shown in Figure 6. After each data byte, the lower order address bits are automatically incremented, while the higher order address bits (page address) remain unchanged. If during this process the end of page is exceeded, then loading will "roll over" to the first byte in the page, thus possibly overwriting previously loaded data. Following completion of the write cycle, the CAT25080/160 is automatically returned to the write disable state.

Table 13. BYTE ADDRESS

Device	Address Significant Bits	Address Don't Care Bits	# Address Clock Pulse
CAT25080	A9 – A0	A15 – A10	16
CAT25160	A10 – A0	A15 – A11	16

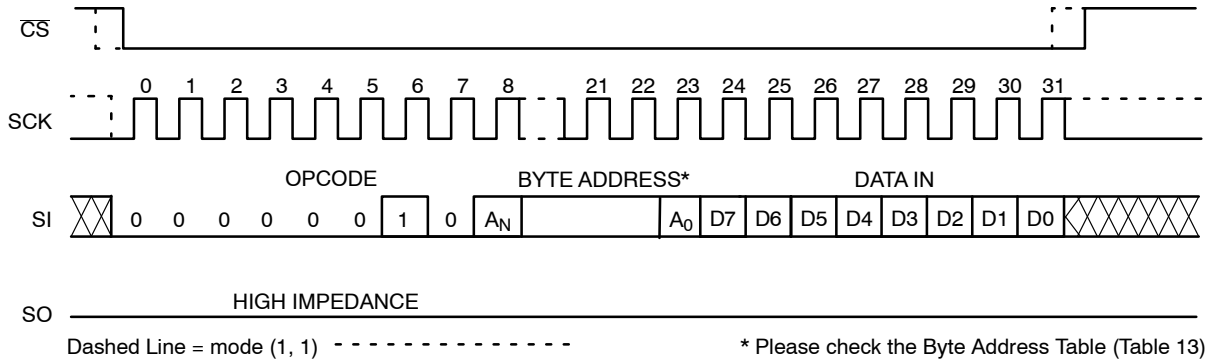

Figure 5. Byte WRITE Timing

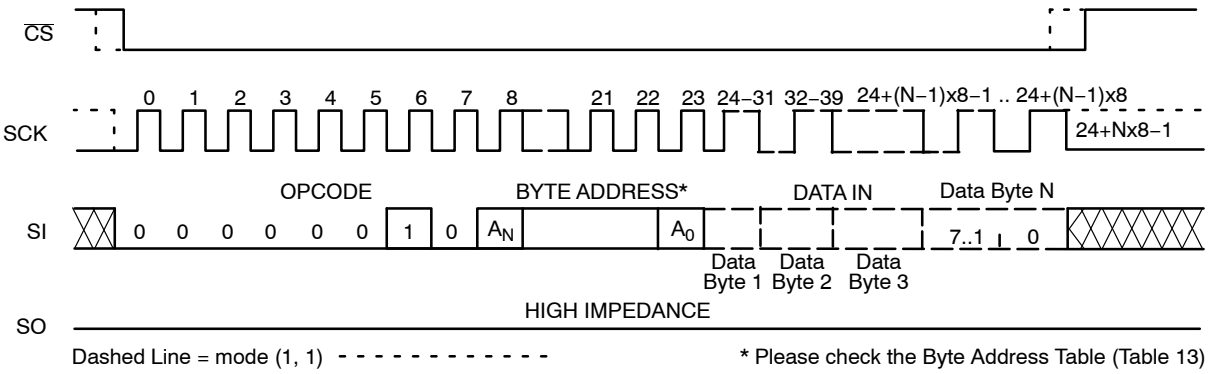

Figure 6. Page WRITE Timing

Write Status Register

The Status Register is written by sending a WRSR instruction according to timing shown in Figure 7. Only bits 2, 3 and 7 can be written using the WRSR command.

Write Protection

The Write Protect ($\overline{WP}$) pin can be used to protect the Block Protect bits BP0 and BP1 against being inadvertently altered. When $\overline{WP}$ is low and the WPEN bit is set to “1”, write operations to the Status Register are inhibited. $\overline{WP}$ going low while $\overline{CS}$ is still low will interrupt a write to the status register. If the internal write cycle has already been initiated, $\overline{WP}$ going low will have no effect on any write operation to the Status Register. The $\overline{WP}$ pin function is blocked when the WPEN bit is set to “0”. The $\overline{WP}$ input timing is shown in Figure 8.

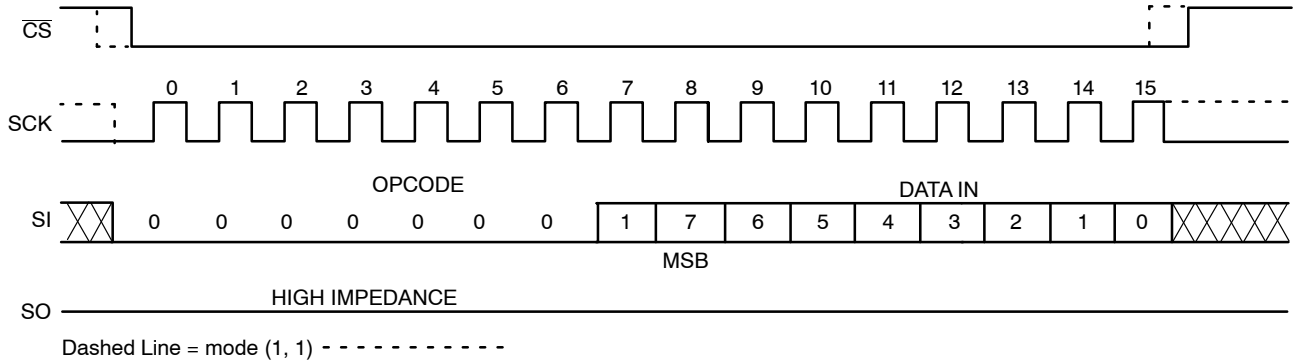

Figure 7. WRSR Timing

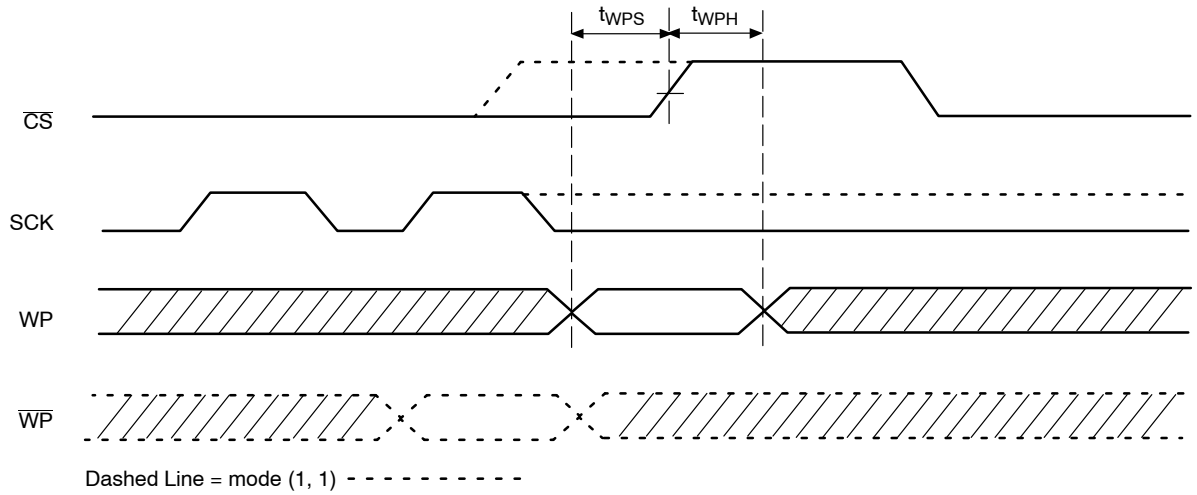

Figure 8. $\overline{WP}$ Timing

READ OPERATIONS

Read from Memory Array

To read from memory, the host sends a READ instruction followed by a 16−bit address (see Table 13 for the number of significant address bits).

After receiving the last address bit, the CAT25080/160 will respond by shifting out data on the SO pin (as shown in Figure 9). Sequentially stored data can be read out by simply continuing to run the clock. The internal address pointer is automatically incremented to the next higher address as data is shifted out. After reaching the highest memory address, the address counter "rolls over" to the lowest memory address, and the read cycle can be continued indefinitely. The read operation is terminated by taking $\overline{CS}$ high.

Read Status Register

To read the status register, the host simply sends a RDSR command. After receiving the last bit of the command, the CAT25080/160 will shift out the contents of the status register on the SO pin (Figure 10). The status register may be read at any time, including during an internal write cycle.

While the internal write cycle is in progress, the RDSR command will output the full content of the status register (New product, Rev. D) or the RDY (Ready) bit only (i.e., data out = FFh) for previous product revision C (Mature product). For easy detection of the internal write cycle completion, both during writing to the memory array and to the status register, we recommend sampling the RDY bit only through the polling routine. After detecting the RDY bit "0", the next RDSR instruction will always output the expected content of the status register.

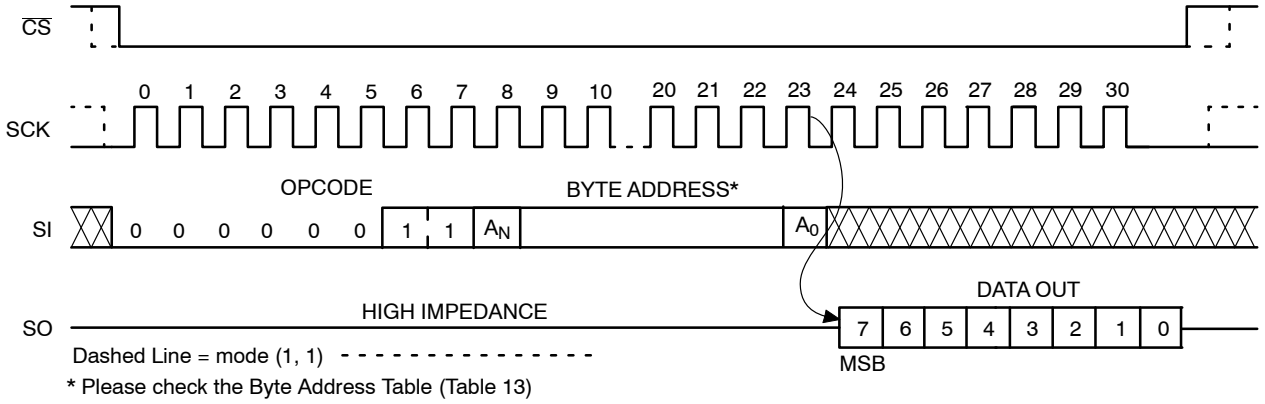

Figure 9. READ Timing

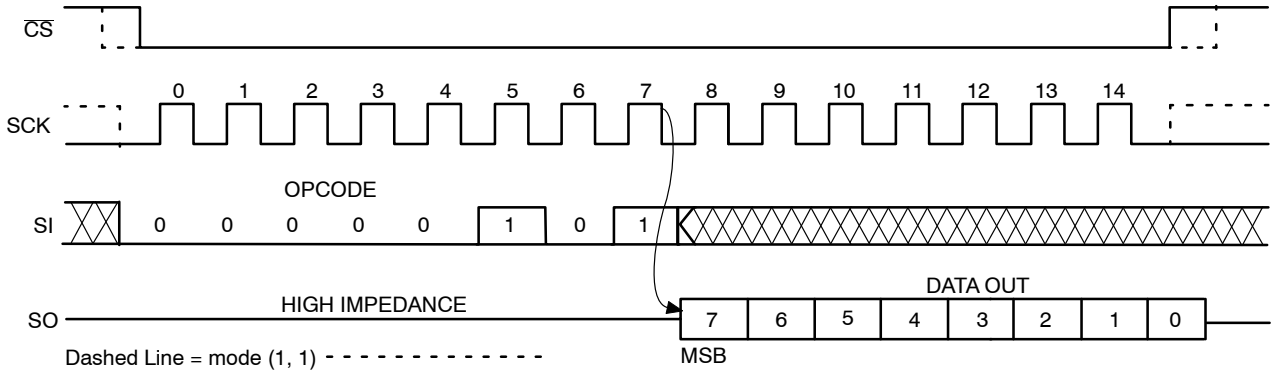

Figure 10. RDSR Timing

Hold Operation

The $\overline{HOLD}$ input can be used to pause communication between host and CAT25080/160. To pause, $\overline{HOLD}$ must be taken low while SCK is low (Figure 11). During the hold condition the device must remain selected ($\overline{CS}$ low). During the pause, the data output pin (SO) is tri−stated (high impedance) and SI transitions are ignored. To resume communication, $\overline{HOLD}$ must be taken high while SCK is low.

Design Considerations

The CAT25080/160 devices incorporate Power−On Reset (POR) circuitry which protects the internal logic against powering up in the wrong state. The device will power up into Standby mode after V_{CC} exceeds the POR trigger level and will power down into Reset mode when V_{CC} drops below the POR trigger level. This bi−directional POR behavior protects the device against 'brown−out' failure following a temporary loss of power.

The CAT25080/160 device powers up in a write disable state and in a low power standby mode. A WREN instruction must be issued prior to any writes to the device.

After power up, the $\overline{CS}$ pin must be brought low to enter a ready state and receive an instruction. After a successful byte/page write or status register write, the device goes into a write disable mode. The $\overline{CS}$ input must be set high after the proper number of clock cycles to start the internal write cycle. Access to the memory array during an internal write cycle is ignored and programming is continued. Any invalid op−code will be ignored and the serial output pin (SO) will remain in the high impedance state.

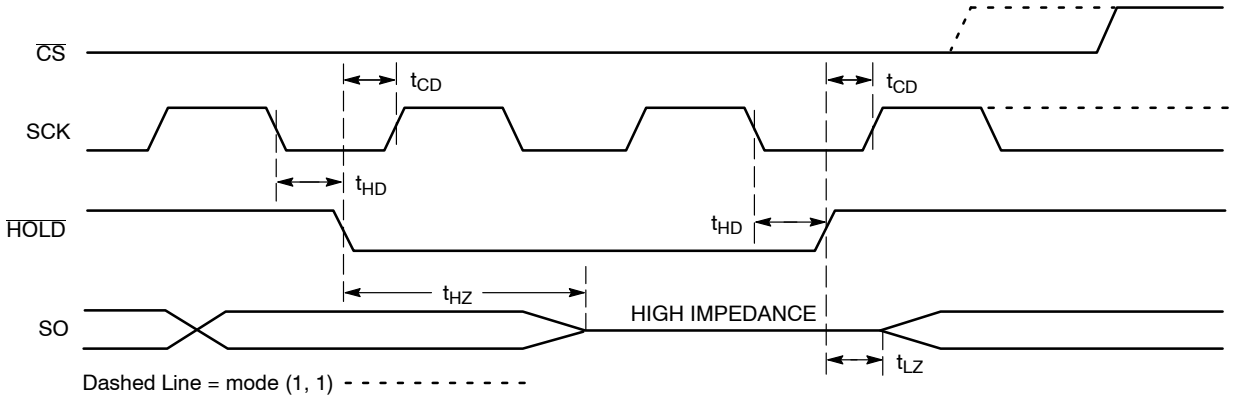

Figure 11. $\overline{HOLD}$ Timing

ORDERING INFORMATION (Notes 13 – 16)

Device Order Number	Specific Device Marking*	Package Type	Temperature Range	Lead Finish	Shipping†
CAT25080HU4I-GT3	S3U	UDFN8−EP	I = Industrial (−40°C to +85°C)	NiPdAu	
CAT25080VI-GT3	25080D	SOIC−8, JEDEC	I = Industrial (−40°C to +85°C)	NiPdAu	Tape & Reel, 3,000 Units / Reel
CAT25080VE-GT3	25080D	SOIC−8, JEDEC	E = Extended (−40°C to +125°C)	NiPdAu	
CAT25080YI-GT3	S08D	TSSOP−8	I = Industrial (−40°C to +85°C)	NiPdAu	
CAT25080YE-GT3	S08D	TSSOP−8	E = Extended (−40°C to +125°C)	NiPdAu	
CAT25160HU4I-GT3	S4U	UDFN8−EP	I = Industrial (−40°C to +85°C)	NiPdAu	
CAT25160VI-GT3	25160D	SOIC−8, JEDEC	I = Industrial (−40°C to +85°C)	NiPdAu	Tape & Reel, 3,000 Units / Reel
CAT25160VE-GT3	25160D	SOIC−8, JEDEC	E = Extended (−40°C to +125°C)	NiPdAu	
CAT25160YI-GT3	S16D	TSSOP−8	I = Industrial (−40°C to +85°C)	NiPdAu	

†For information on tape and reel specifications, including part orientation and tape sizes, please refer to our Tape and Reel Packaging Specifications Brochure, BRD8011/D.

13. All packages are RoHS−compliant (Lead−free, Halogen−free).
14. The standard lead finish is NiPdAu.
15. For detailed information and a breakdown of device nomenclature and numbering systems, please see the ON Semiconductor Device Nomenclature document, TND310/D, available at www.onsemi.com
16. For additional package and temperature options, please contact your nearest ON Semiconductor Sales office.
17. Not recommended for new design

MECHANICAL CASE OUTLINE
PACKAGE DIMENSIONS

ON Semiconductor®



SCALE 2:1

UDFN8, 2x3 EXTENDED PAD
CASE 517AZ
ISSUE A

DATE 23 MAR 2015

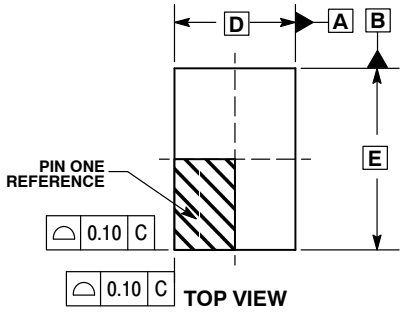

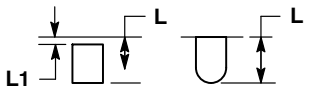

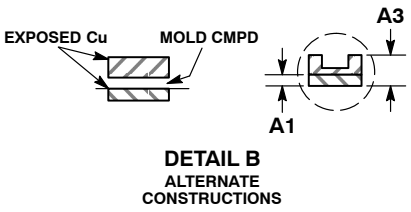

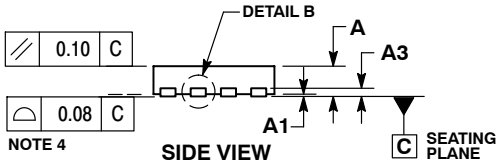

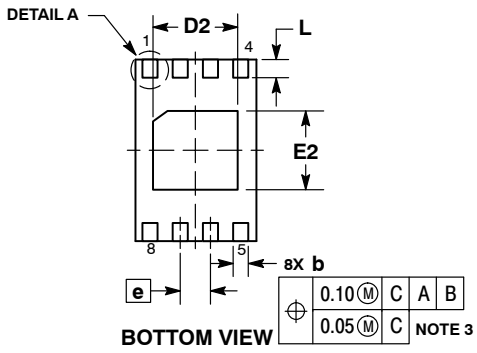

NOTES:
1. DIMENSIONING AND TOLERANCING PER ASME Y14.5M, 1994.
2. CONTROLLING DIMENSION: MILLIMETERS.
3. DIMENSION b APPLIES TO PLATED TERMINAL AND IS MEASURED BETWEEN 0.15 AND 0.25MM FROM THE TERMINAL TIP.
4. COPLANARITY APPLIES TO THE EXPOSED PAD AS WELL AS THE TERMINALS.

	MILLIMETERS	
DIM	MIN	MAX
A	0.45	0.55
A1	0.00	0.05
A3	0.13 REF	
b	0.20	0.30
D	2.00 BSC	
D2	1.35	1.45
E	3.00 BSC	
E2	1.25	1.35
e	0.50 BSC	
L	0.25	0.35
L1	---	0.15

GENERIC MARKING DIAGRAM*

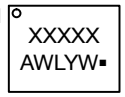

XXXXX = Specific Device Code
A = Assembly Location
WL = Wafer Lot
Y = Year
W = Work Week
▪ = Pb−Free Package

*This information is generic. Please refer to device data sheet for actual part marking. Pb−Free indicator, “G” or microdot “ ▪”, may or may not be present.

RECOMMENDED SOLDERING FOOTPRINT*

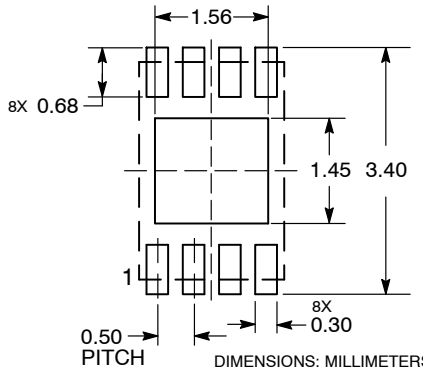

DIMENSIONS: MILLIMETERS

*For additional information on our Pb−Free strategy and soldering details, please download the ON Semiconductor Soldering and Mounting Techniques Reference Manual, SOLDERRM/D.

DOCUMENT NUMBER:	**98AON42552E**	Electronic versions are uncontrolled except when accessed directly from the Document Repository. Printed versions are uncontrolled except when stamped “CONTROLLED COPY” in red.
DESCRIPTION:	**UDFN8, 2X3 EXTENDED PAD**	**PAGE 1 OF 1**

ON Semiconductor and ON are trademarks of Semiconductor Components Industries, LLC dba ON Semiconductor or its subsidiaries in the United States and/or other countries. ON Semiconductor reserves the right to make changes without further notice to any products herein. ON Semiconductor makes no warranty, representation or guarantee regarding the suitability of its products for any particular purpose, nor does ON Semiconductor assume any liability arising out of the application or use of any product or circuit, and specifically disclaims any and all liability, including without limitation special, consequential or incidental damages. ON Semiconductor does not convey any license under its patent rights nor the rights of others.

© Semiconductor Components Industries, LLC, 2019

MECHANICAL CASE OUTLINE
PACKAGE DIMENSIONS

ON Semiconductor®

SOIC 8, 150 mils
CASE 751BD–01
ISSUE O

DATE 19 DEC 2008

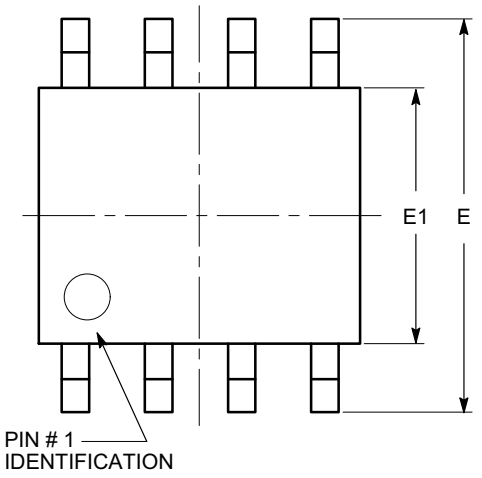

TOP VIEW

SYMBOL	MIN	NOM	MAX
A	1.35		1.75
A1	0.10		0.25
b	0.33		0.51
c	0.19		0.25
D	4.80		5.00
E	5.80		6.20
E1	3.80		4.00
e	1.27 BSC		
h	0.25		0.50
L	0.40		1.27
θ	0º		8º

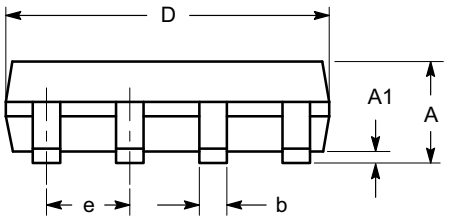

SIDE VIEW

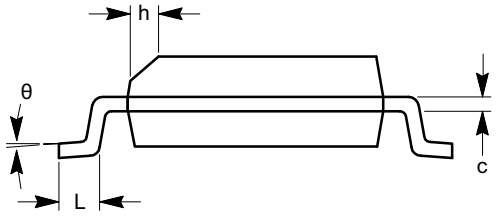

END VIEW

Notes:
(1) All dimensions are in millimeters. Angles in degrees.
(2) Complies with JEDEC MS-012.

DOCUMENT NUMBER:	98AON34272E	Electronic versions are uncontrolled except when accessed directly from the Document Repository. Printed versions are uncontrolled except when stamped "CONTROLLED COPY" in red.
DESCRIPTION:	SOIC 8, 150 MILS	PAGE 1 OF 1

ON Semiconductor and ON are trademarks of Semiconductor Components Industries, LLC dba ON Semiconductor or its subsidiaries in the United States and/or other countries. ON Semiconductor reserves the right to make changes without further notice to any products herein. ON Semiconductor makes no warranty, representation or guarantee regarding the suitability of its products for any particular purpose, nor does ON Semiconductor assume any liability arising out of the application or use of any product or circuit, and specifically disclaims any and all liability, including without limitation special, consequential or incidental damages. ON Semiconductor does not convey any license under its patent rights nor the rights of others.

© Semiconductor Components Industries, LLC, 2019

TSSOP8, 4.4x3
CASE 948AL−01
ISSUE O

DATE 19 DEC 2008

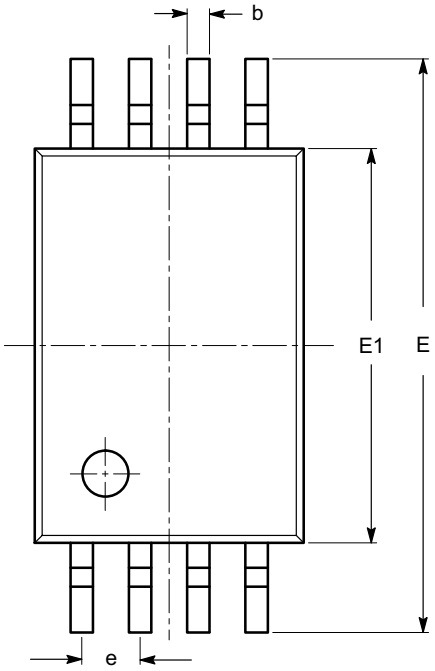

TOP VIEW

SYMBOL	MIN	NOM	MAX
A			1.20
A1	0.05		0.15
A2	0.80	0.90	1.05
b	0.19		0.30
c	0.09		0.20
D	2.90	3.00	3.10
E	6.30	6.40	6.50
E1	4.30	4.40	4.50
e	0.65 BSC		
L	1.00 REF		
L1	0.50	0.60	0.75
θ	0º		8º

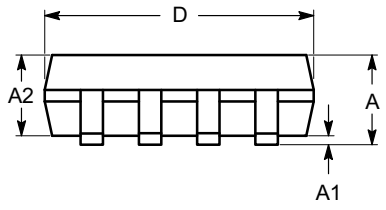

SIDE VIEW

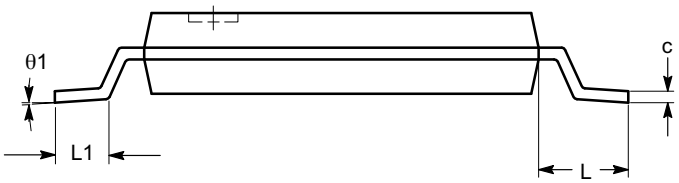

END VIEW

Notes:
(1) All dimensions are in millimeters. Angles in degrees.
(2) Complies with JEDEC MO-153.

DOCUMENT NUMBER:	**98AON34428E**	Electronic versions are uncontrolled except when accessed directly from the Document Repository. Printed versions are uncontrolled except when stamped "CONTROLLED COPY" in red.
DESCRIPTION:	**TSSOP8, 4.4X3**	**PAGE 1 OF 1**

ON Semiconductor and ON are trademarks of Semiconductor Components Industries, LLC dba ON Semiconductor or its subsidiaries in the United States and/or other countries. ON Semiconductor reserves the right to make changes without further notice to any products herein. ON Semiconductor makes no warranty, representation or guarantee regarding the suitability of its products for any particular purpose, nor does ON Semiconductor assume any liability arising out of the application or use of any product or circuit, and specifically disclaims any and all liability, including without limitation special, consequential or incidental damages. ON Semiconductor does not convey any license under its patent rights nor the rights of others.

© Semiconductor Components Industries, LLC, 2019

onsemi, ONSEMI , and other names, marks, and brands are registered and/or common law trademarks of Semiconductor Components Industries, LLC dba "**onsemi**" or its affiliates and/or subsidiaries in the United States and/or other countries. **onsemi** owns the rights to a number of patents, trademarks, copyrights, trade secrets, and other intellectual property. A listing of **onsemi**'s product/patent coverage may be accessed at www.onsemi.com/site/pdf/Patent−Marking.pdf. **onsemi** reserves the right to make changes at any time to any products or information herein, without notice. The information herein is provided "as−is" and **onsemi** makes no warranty, representation or guarantee regarding the accuracy of the information, product features, availability, functionality, or suitability of its products for any particular purpose, nor does **onsemi** assume any liability arising out of the application or use of any product or circuit, and specifically disclaims any and all liability, including without limitation special, consequential or incidental damages. Buyer is responsible for its products and applications using **onsemi** products, including compliance with all laws, regulations and safety requirements or standards, regardless of any support or applications information provided by **onsemi**. "Typical" parameters which may be provided in **onsemi** data sheets and/or specifications can and do vary in different applications and actual performance may vary over time. All operating parameters, including "Typicals" must be validated for each customer application by customer's technical experts. **onsemi** does not convey any license under any of its intellectual property rights nor the rights of others. **onsemi** products are not designed, intended, or authorized for use as a critical component in life support systems or any FDA Class 3 medical devices or medical devices with a same or similar classification in a foreign jurisdiction or any devices intended for implantation in the human body. Should Buyer purchase or use **onsemi** products for any such unintended or unauthorized application, Buyer shall indemnify and hold **onsemi** and its officers, employees, subsidiaries, affiliates, and distributors harmless against all claims, costs, damages, and expenses, and reasonable attorney fees arising out of, directly or indirectly, any claim of personal injury or death associated with such unintended or unauthorized use, even if such claim alleges that **onsemi** was negligent regarding the design or manufacture of the part. **onsemi** is an Equal Opportunity/Affirmative Action Employer. This literature is subject to all applicable copyright laws and is not for resale in any manner.

PUBLICATION ORDERING INFORMATION

LITERATURE FULFILLMENT:
Email Requests to: orderlit@onsemi.com

onsemi Website: www.onsemi.com

TECHNICAL SUPPORT
North American Technical Support:
Voice Mail: 1 800−282−9855 Toll Free USA/Canada
Phone: 011 421 33 790 2910

Europe, Middle East and Africa Technical Support:
Phone: 00421 33 790 2910
For additional information, please contact your local Sales Representative

◊