SURFACE MOUNT TYPE SLIDE SWITCHES CAS



FEATURES

- Compatible with most automatic pick & place machinery
- Compact and space saving SMD type
- Excellent contact stability by twin Au-plated contact
- Low profile design of 2.5 mm

INTERNAL STRUCTURE

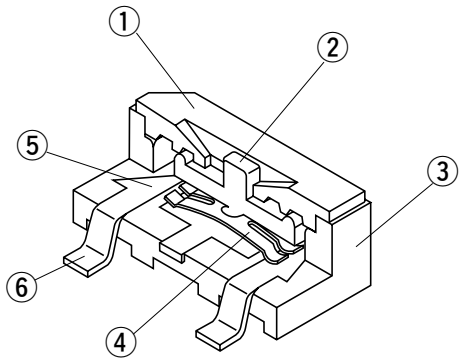

Part name		Material	Flammability
①	Cover	PPS (Polyphenylenesulphide)	UL-94V-0
②	Slider	Nylon	
③	Housing	PPS (Polyphenylenesulphide)	
④	Slider contact	Copper alloy, Gold-plated	—
⑤	Fixed contact		
⑥	Terminal pin		

CFCs, Halon, Carbon tetrachloride and designated bromic flame retardant PBBOs and PBBs are not used in our products.

PART NUMBER DESIGNATION

C A S - 1 2 0 T B 1

Series name

No. of poles
1 : 1 pole
2 : 2 poles
D : Dual (2 separate sliders)

No. of contacts
2 : 2 contacts

Setting position
0 : Top setting

Structure
1 : Non-washing type (Seal tape is nothing)
2 : Non-washing type (Seal tape is provided)
Blank : Washable type (Seal tape is provided)

Shape of terminal
A : J-hook
B : Gull wing

Form of packaging
T : Taping (Reel)
Blank : Bulk in vinyl bags

❊ Please refer to the LIST OF PART NUMBERS when placing orders.

■ Specifications are subject to change without notice. Specifications in this catalog are for reference. The formal specification sheets will be submitted upon request.

CAS
SLIDE SWITCHES (SMD)

■ LIST OF PART NUMBERS

No. of pole	No. of contact	Setting position	Form of packaging	Non-washing type (Seal tape is nothing)		Non-washing type (Seal tape is provided)		Pieces in package
				A (J-hook)	B (Gull wing)	A (J-hook)	B (Gull wing)	
1	2	Top setting	Taping	CAS-120TA1	CAS-120TB1	CAS-120TA2	CAS-120TB2	1000pcs./reel
			Bulk packaging	CAS-120A1	CAS-120B1			100pcs./pack
2			Taping	CAS-220TA1	CAS-220TB1			1000pcs./reel
			Bulk packaging	CAS-220A1	CAS-220B1			100pcs./pack
Dual			Taping	CAS-D20TA1	CAS-D20TB1			1000pcs./reel
			Bulk packaging	CAS-D20A1	CAS-D20B1			100pcs./pack

No. of pole	No. of contact	Setting position	Form of packaging	Washable type (Seal tape is provided)		Pieces in package
				A (J-hook)	B (Gull wing)	
1	2	Top setting	Taping	CAS-120TA	CAS-120TB	1000pcs./reel
			Bulk packaging	CAS-120A	CAS-120B	100pcs./pack
2			Taping	CAS-220TA	CAS-220TB	1000pcs./reel
			Bulk packaging	CAS-220A	CAS-220B	100pcs./pack
Dual			Taping	CAS-D20TA	CAS-D20TB	1000pcs./reel
			Bulk packaging	CAS-D20A	CAS-D20B	100pcs./pack

⍁ : Not manufactured

❉ Verify the above part numbers when placing orders.
Taping specification is not sold separately and must be purchased in reel unit.

■ STANDARD SPECIFICATIONS

Operating temp. range	– 40 ~ +85 °C
Sealing	Washable by seal tape
Net weight	Approx. 0.05g (CAS-120) Approx. 0.08g (CAS-220/D20)

■ MECHANICAL CHARACTERISTICS

Operating force	0.5 ~ 5 N {0.05 ~ 0.51 kgf}
Stop strength	10 N {1.02 kgf}, 60 s
Solderability	235 ± 5 °C, 2 ± 0.5 s
Soldering heat	240 °C (VPS method), 30 s
Shear (Adhesion)	5 N {0.51 kgf} 10 s
Substrate bending	Width 90 mm, bend 3 mm, 5 s, 1 time
Pull-off strength	5 N {0.51 kgf} 10 s

{ } : Reference only

■ ELECTRICAL CHARACTERISTICS

Contact rating Non-switching Switching Minimum	 DC50 V 100 mA DC6 V, 100 mA DC24 V, 25 mA DC20 mV 1 µA
Contact resistance	50 mΩ maximum (1.5 mA, 1 kHz, 20 mV)
Insulation resistance	1000 MΩ (DC100 V) minimum
Dielectric strength	AC500 V, 50 Hz, 60 s

■ ENVIRONMENTAL CHARACTERISTICS

Vibration	Amplitude of 1.5 mm (p-p) or Acceleration of 98 m/s², 10-500 Hz, 3 directions for 10 cycles each
Shock	490 m/s², 11 ms 6 directions for 3 times each
Load life	Continuous load 2000 cycles, DC6 ± 0.5 V, 100 ± 10 mA
Humidity	–10 ~ +65 °C, 0 ~ 96 %RH, 24 h for 10 cycles
High temp. exposure	85 °C, 96 h
Low temp. exposure	–40 °C, 96 h
Thermal shock	–40 (0.5 h) ~ +85 °C (0.5 h), 5 cycles

■ Specifications are subject to change without notice. Specifications in this catalog are for reference. The formal specification sheets will be submitted upon request.

CAS
SLIDE SWITCHES (SMD)

■ OUTLINE DIMENSIONS

Unless otherwise specified, tolerance : ± 0.3 (Unit : mm)

● CAS-120A1

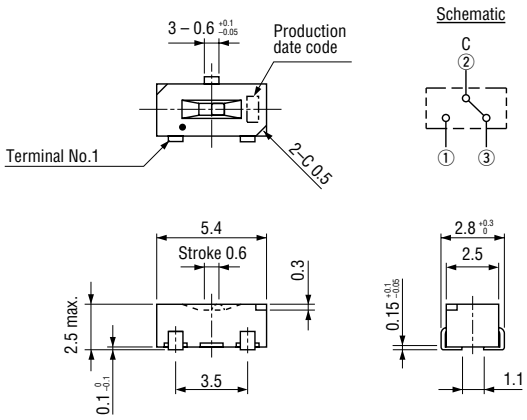

● CAS-120B1

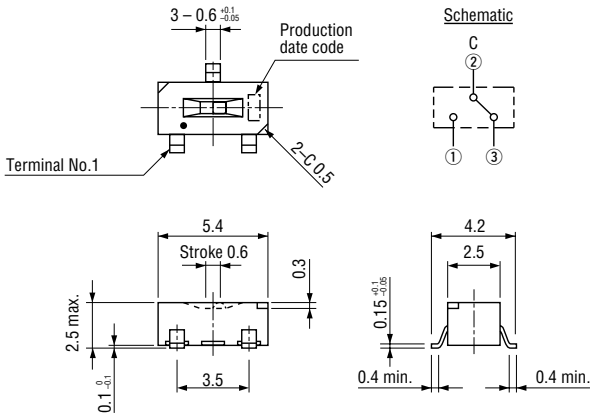

● CAS-220A1

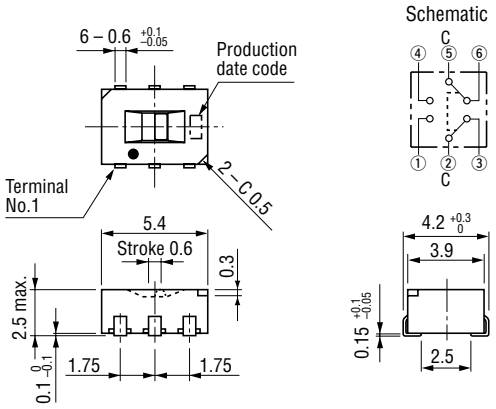

● CAS-220B1

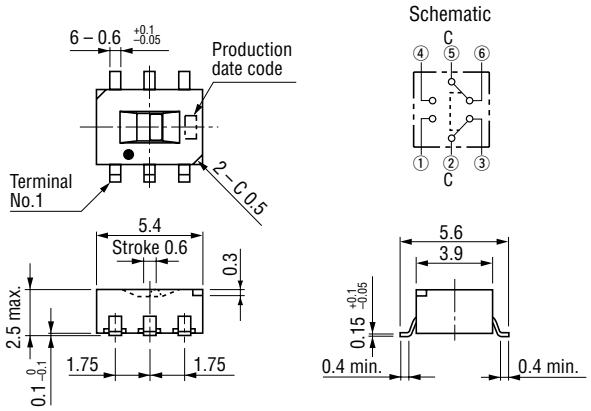

● CAS-D20A1

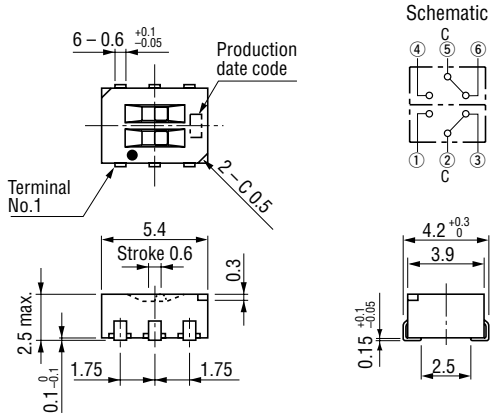

● CAS-D20B1

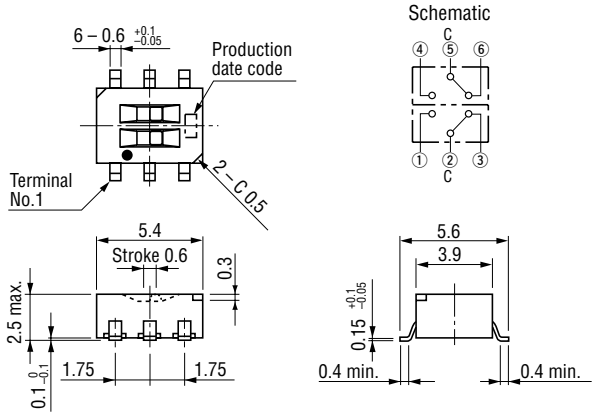

■ Specifications are subject to change without notice. Specifications in this catalog are for reference. The formal specification sheets will be submitted upon request.

■ RECOMMENDED P.C.B. PAD OUTLINE DIMENSIONS

(Unit : mm)

● CAS-120
A type

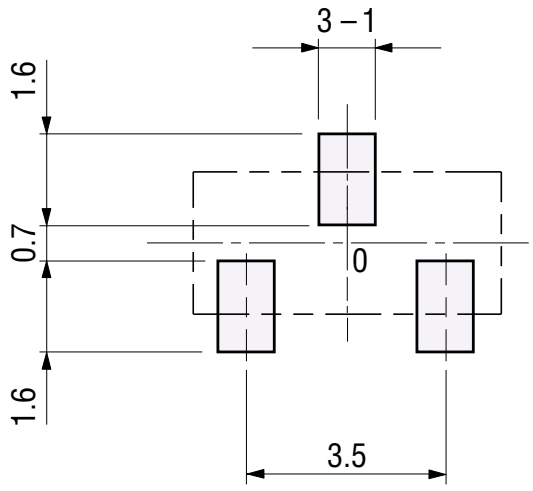

● CAS-120
B type

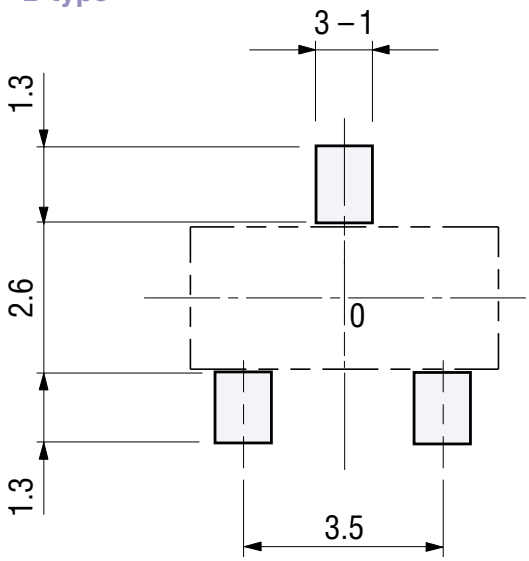

● CAS-220 • D20
A type

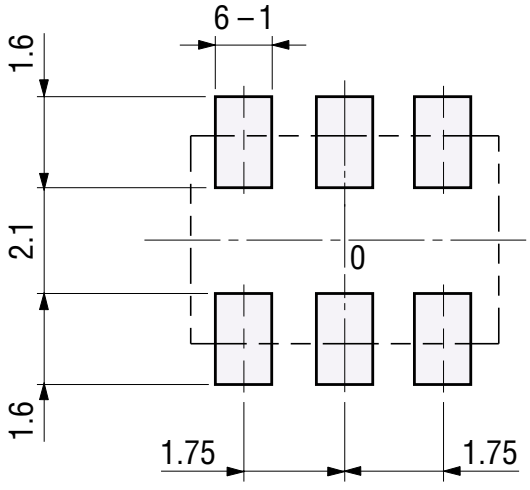

● CAS-220 • D20
B type

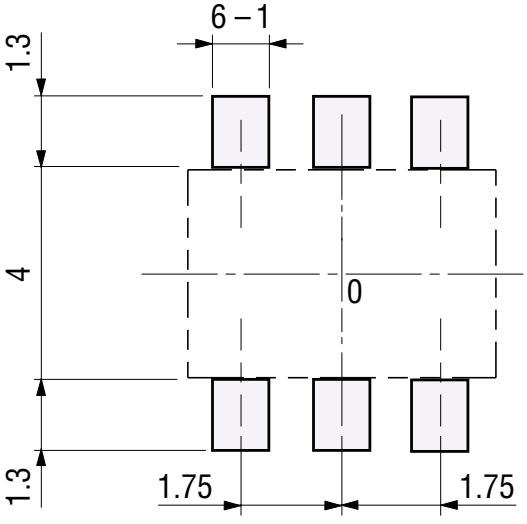

Note) The zero point is the center of mounting.

CAS
SLIDE SWITCHES (SMD)

■ SOLDERING CONDITIONS

● **Soldering iron**
3 s maximum at 300 °C

● **Vapor-phase soldering**
215 °C, less than 35 s

● **Infrared reflow soldering**
The temperature profile shown at right is recommended for reflow soldering. However, process carefully in case of infrared heater, because the absoription rate of the object may vary according to its color, material, etc. and thus heating rate can be different. Please note that the surface temperature of the product should not exceed 240 ˚C. When the product temperature exceeds 250 °C, deformation may occur due to heat.

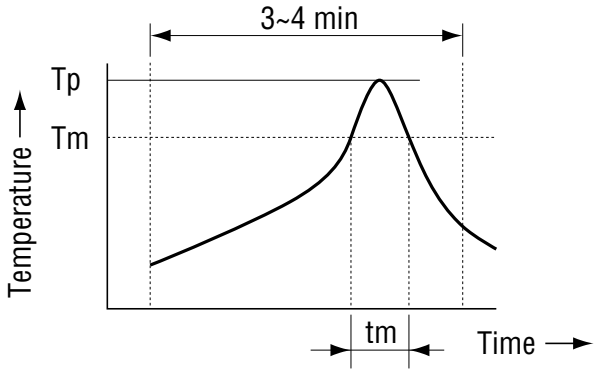

Tp ≦ 240 °C (Peak temperature)
Tm = 180 °C (Melting point temperature)
tm ≦ 10 s (Melting time)

■ PACKAGING SPECIFICATIONS

<Taping packaging specifications>

● Taping version is packaged in 1000 pcs. per reel.
Orders will be accepted for units of 1000 pcs., i.e., 1000, 2000, 3000 pcs., etc.

● Taping version is boxed with two reels (2000 pcs.).

Maximum number of consecutive missing pieces=2
Leader length and reel dimension are shown in the diagrams below:

● Embossed tape dimensions

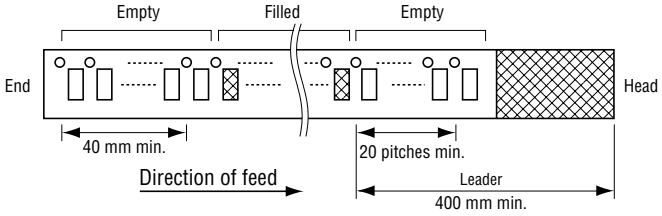

● Reel dimensions

(Unit: mm)

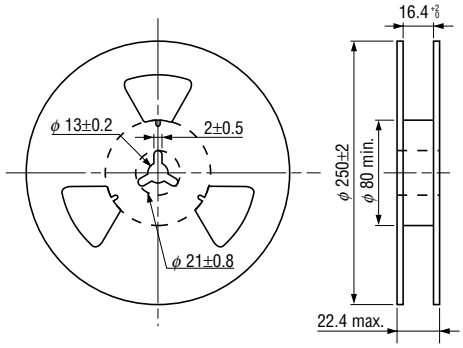

● Reel & embossed tape materials

Embossed tape: Plastic
Reel: Paper

● Embossed tape pull strength

10 N {1.02 kgf} minimum

● Peeling strength of seal tape

0.1~0.7 N {10.2~71.4 gf}

{ } : Reference only

● Test method for peeling strength of seal tape

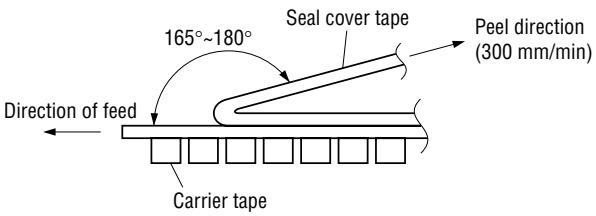

■ Specifications are subject to change without notice. Specifications in this catalog are for reference. The formal specification sheets will be submitted upon request.

● CAS-120TA, TB

(Unit: mm)

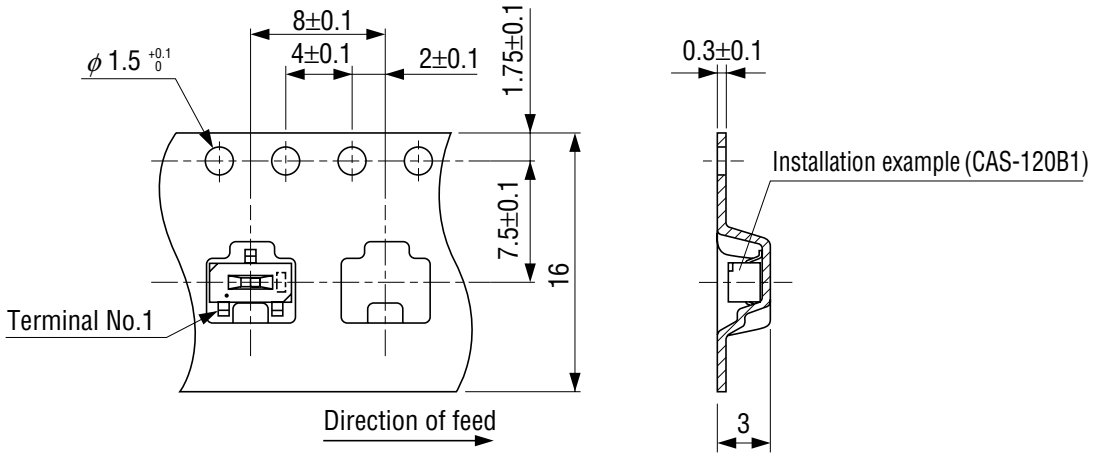

● CAS-220 • D20TA, TB

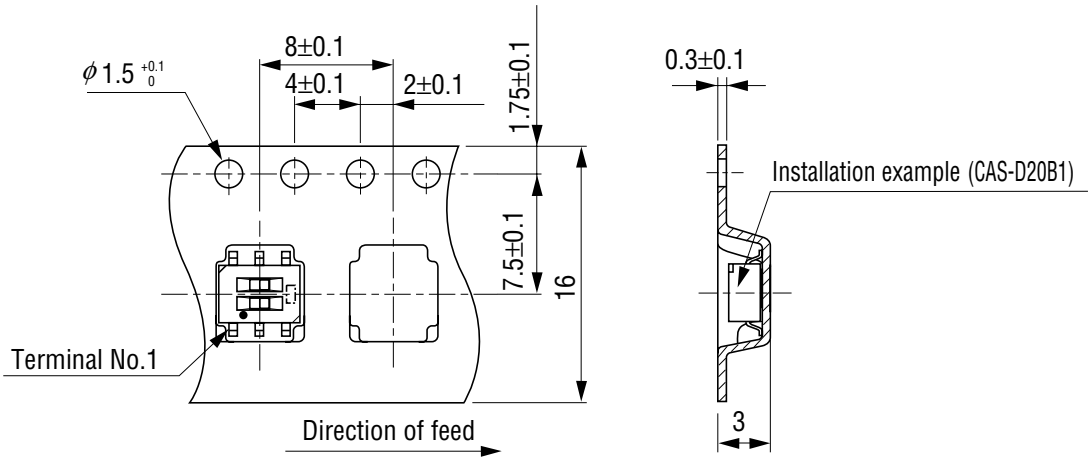

<Bulk packaging specifications>

- Bulk packing is made by a small packing box and vinyl bags.
- One vinyl bag contains 100 pcs. and the small packing box contains 5 vinyl bags or 500 pcs.