HSD Connector (HSD+2, HSD+4, HSD+8)
CAM-K22LN/LR, CAM-K24, CAM-K72LN, CAM-K83, CAM-K56, CAM-L44

FEATURES

1. Capable of high speed data transmission such as USB2.0, LVDS, and Ethernet, etc.
2. Power supply contacts and HSD connector are integrated. Able to meet downsizing requirements.
3. Selectable variations of the number of power supply pins: 2pins, 4pins, and 8pins.
4. Each coding (mating key) is available.
5. Compatible with Pin-in-Paste.
6. Compliant with RoHS Directive.

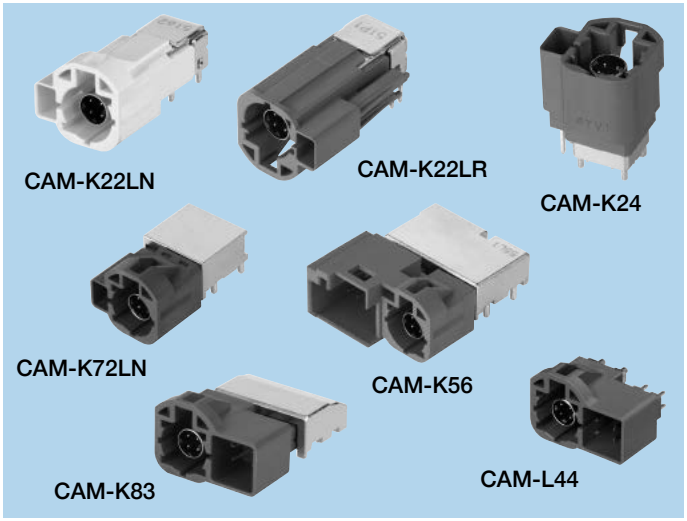

HOW TO ORDER

1. CAM-K22LN/LR

K22 - 006 - 230 - ANBAA - □
1 2 3

1 Series No. (K22LN/LR)
2 No. of contacts (006 : 6pins)
3 Coding (A to F, Z / G to M, P)

2. CAM-K24

K24 - 006 - 230 - ANBAA - □
1 2 3

1 Series No. (K24)
2 No. of contacts (006 : 6pins)
3 Coding (A to F, Z)

3. CAM-K72LN

K72 - 006 - 230 - ANBAA - □
1 2 3

1 Series No. (K72LN)
2 No. of contacts (006 : 6pins)
3 Coding (A to F, Z)

4. CAM-K83

K83 - 012 - 230 - ANBAA - □
1 2 3

1 Series No. (K83)
2 No. of contacts (012 : 12pins)
3 Coding (A to F, Z)

5. CAM-K56

K56 - 012 - 230 - ANBAA - □
1 2 3

1 Series No. (K56)
2 No. of contacts (012 : 12pins)
3 Coding (A to F, Z)

6. CAM-L44

L44 - 008 - 230 - ANBAA - □
1 2 3

1 Series No. (L44)
2 No. of contacts (008 : 8pins)
3 Coding (A to F, Z)

• Any products mentioned in this catalog are subject to any modification in their appearance and others for improvements without prior notification.
• The details listed here are not a guarantee of the individual products at the time of ordering. When using the products, you will be asked to check their specifications.

SPECIFICATIONS

ELECTRICAL CHARACTERISTICS

Rated Voltage	100V DC
Rated Current	1.5A DC
Characteristic Impedance	100Ω
Insertion Loss	≦0.1dB to 1GHz
Return Loss	≦–20dB to 1GHz ≦–17dB to 2GHz

MECHANICAL CHARACTERISTICS

Life (Mating Cycle)	25 times
Total Insertion Force	≦60N
Total Withdrawal Force	5N to 60N

• Any products mentioned in this catalog are subject to any modification in their appearance and others for improvements without prior notification.
• The details listed here are not a guarantee of the individual products at the time of ordering. When using the products, you will be asked to check their specifications.

MATERIAL & FINISH

Component Parts		Material	Finish
CAM-K22 LN/LR HSD+2 Right Angle	Signal Pin	Copper alloy	Gold selective plating
	Power Supply Pin	Copper alloy	Gold selective plating
	Housing	PA resin	Black
	Shell	Copper alloy	Ni plating
	Cover	PA resin	Corresponds to each coding
	Outer Contact	Copper alloy	Ni plating
	Shield Cover	Copper alloy	Ni plating
CAM-K24 HSD+2 Straight	Signal Pin	Copper alloy	Gold selective plating
	Power Supply Pin	Copper alloy	Gold selective plating
	Housing	LCP resin	Black
	Shell	Zinc alloy	Ni plating
	Cover	PA resin	Corresponds to each coding
CAM-K72LN HSD+2 Right Angle	Signal Pin	Copper alloy	Gold selective plating
	Power Supply Pin	Copper alloy	Gold selective plating
	Housing	PA resin	Black
	Shell	Zinc alloy	Ni plating
	Cover	PA resin	Corresponds to each coding
	Outer Contact	Copper alloy	Ni plating
	Lid	Copper alloy	Ni plating
CAM-K83 HSD+4 Right Angle	Signal Pin	Copper alloy	Gold selective plating
	Power Supply Pin	Copper alloy	Gold selective plating
	Housing	PA resin	Black
	Shell	Zinc alloy	Ni plating
	Cover	PA resin	Corresponds to each coding
	Outer Contact	Copper alloy	Ni plating
CAM-K56 HSD+8 Right Angle	Signal Pin	Copper alloy	Gold selective plating
	Power Supply Pin	Copper alloy	Gold selective plating
	Housing	PA resin	Black
	Shell	Zinc alloy	Ni plating
	Cover	PA resin	Corresponds to each coding
	Outer Contact	Copper alloy	Ni plating
CAM-L44 HSD+4 Straight	Signal Pin	Copper alloy	Gold selective plating
	Power Supply Pin	Copper alloy	Gold selective plating
	Housing	LCP resin	Black
	Shell	Zinc alloy	Ni plating
	Cover	PA resin	Corresponds to each coding

- Any products mentioned in this catalog are subject to any modification in their appearance and others for improvements without prior notification.
- The details listed here are not a guarantee of the individual products at the time of ordering. When using the products, you will be asked to check their specifications.

DIMENSIONS

CAM-K22LN

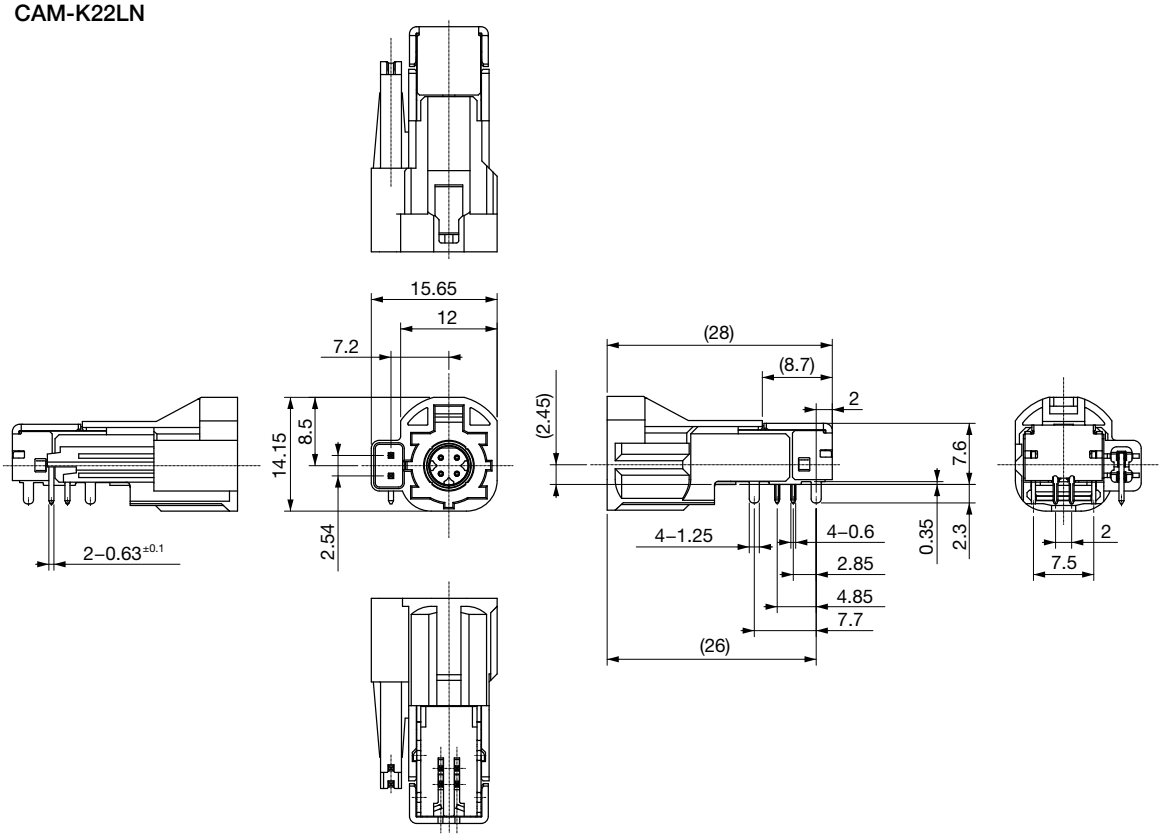

CAM-K22LR

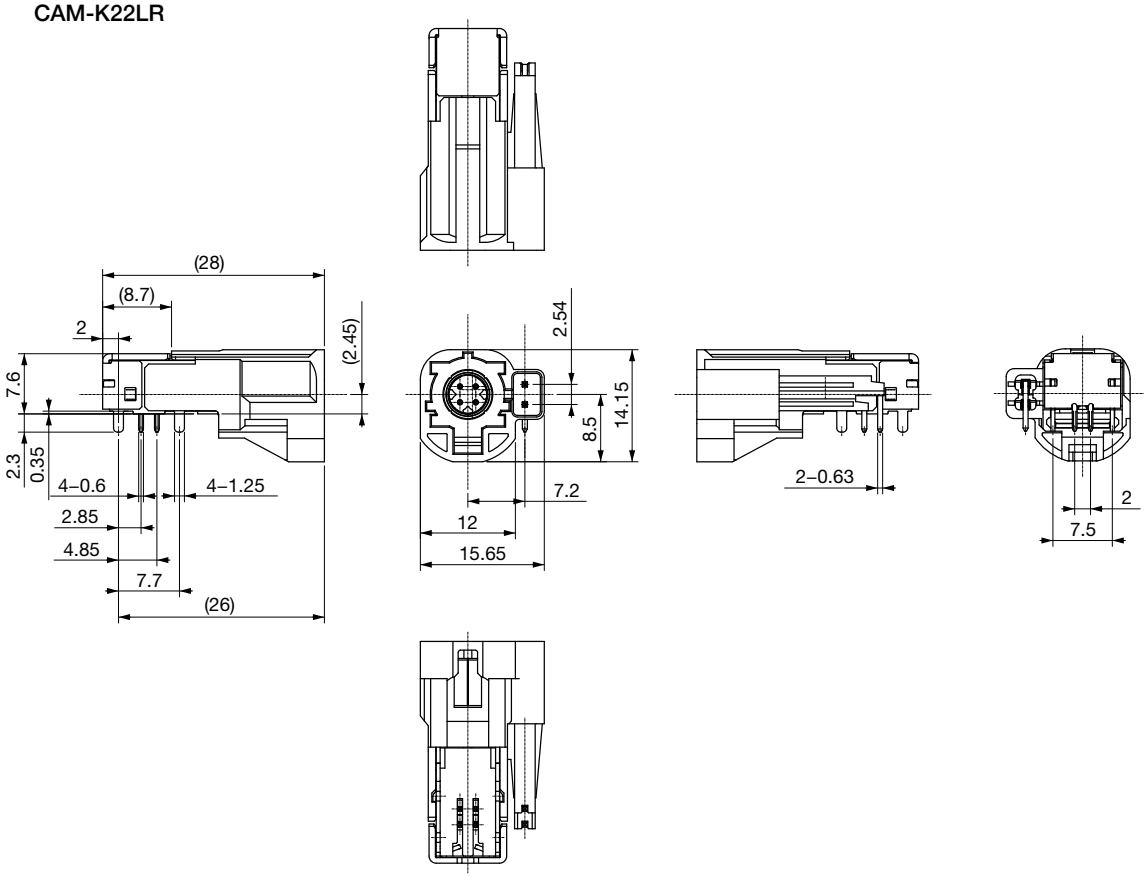

Unit : mm

• Any products mentioned in this catalog are subject to any modification in their appearance and others for improvements without prior notification.
• The details listed here are not a guarantee of the individual products at the time of ordering. When using the products, you will be asked to check their specifications.

CAM-K24

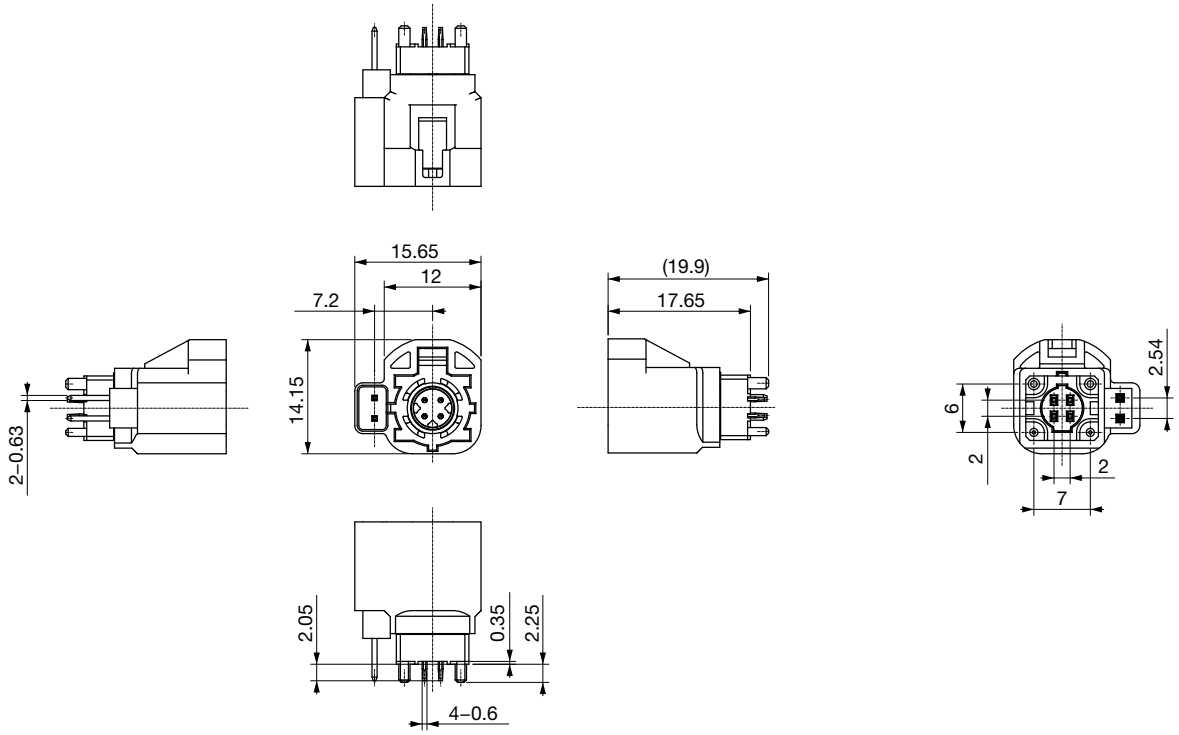

CAM-K72LN

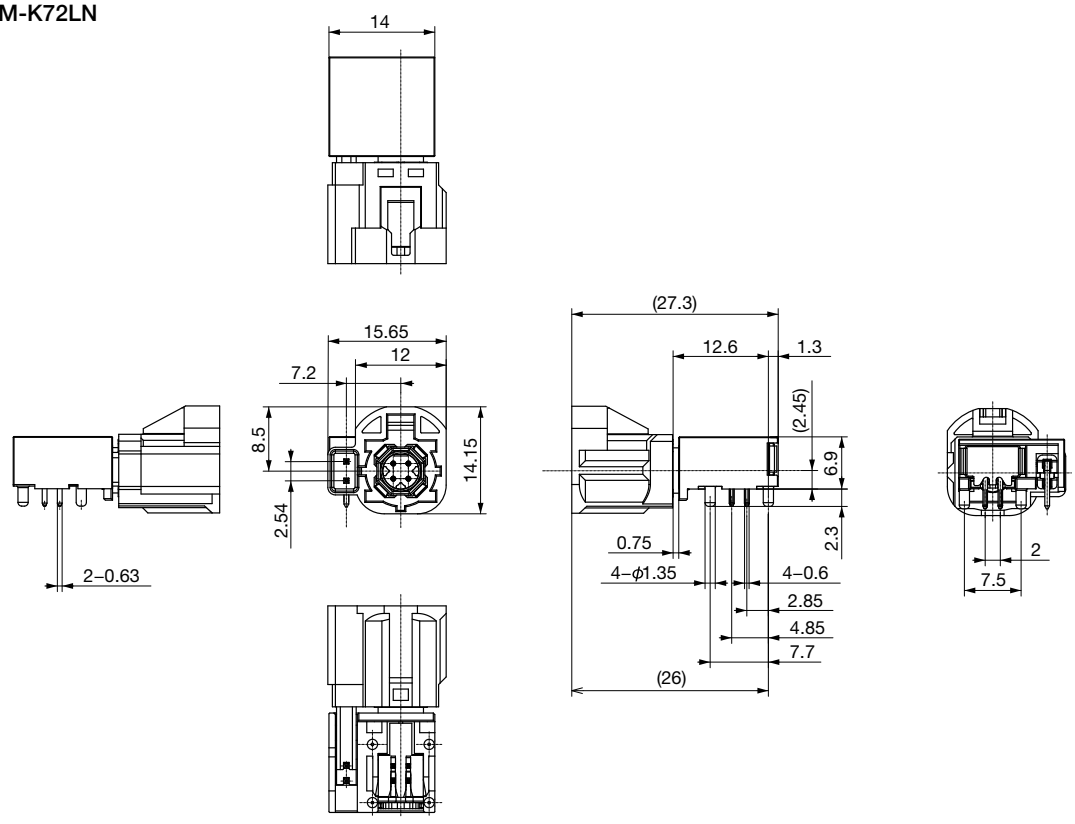

Unit : mm

• Any products mentioned in this catalog are subject to any modification in their appearance and others for improvements without prior notification.
• The details listed here are not a guarantee of the individual products at the time of ordering. When using the products, you will be asked to check their specifications.

CAM-K83

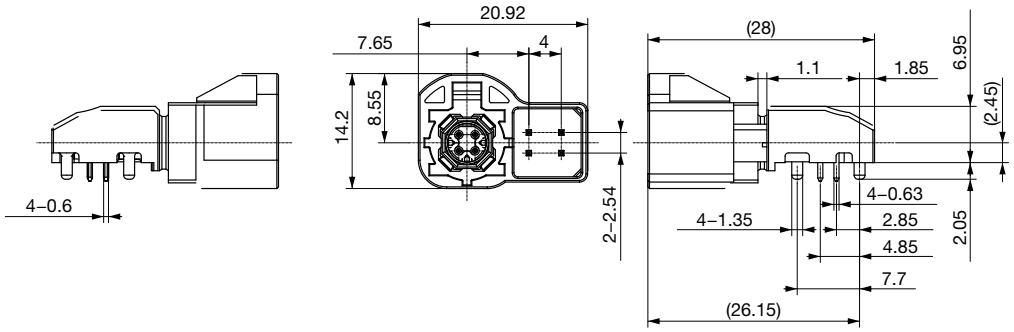

CAM-K56

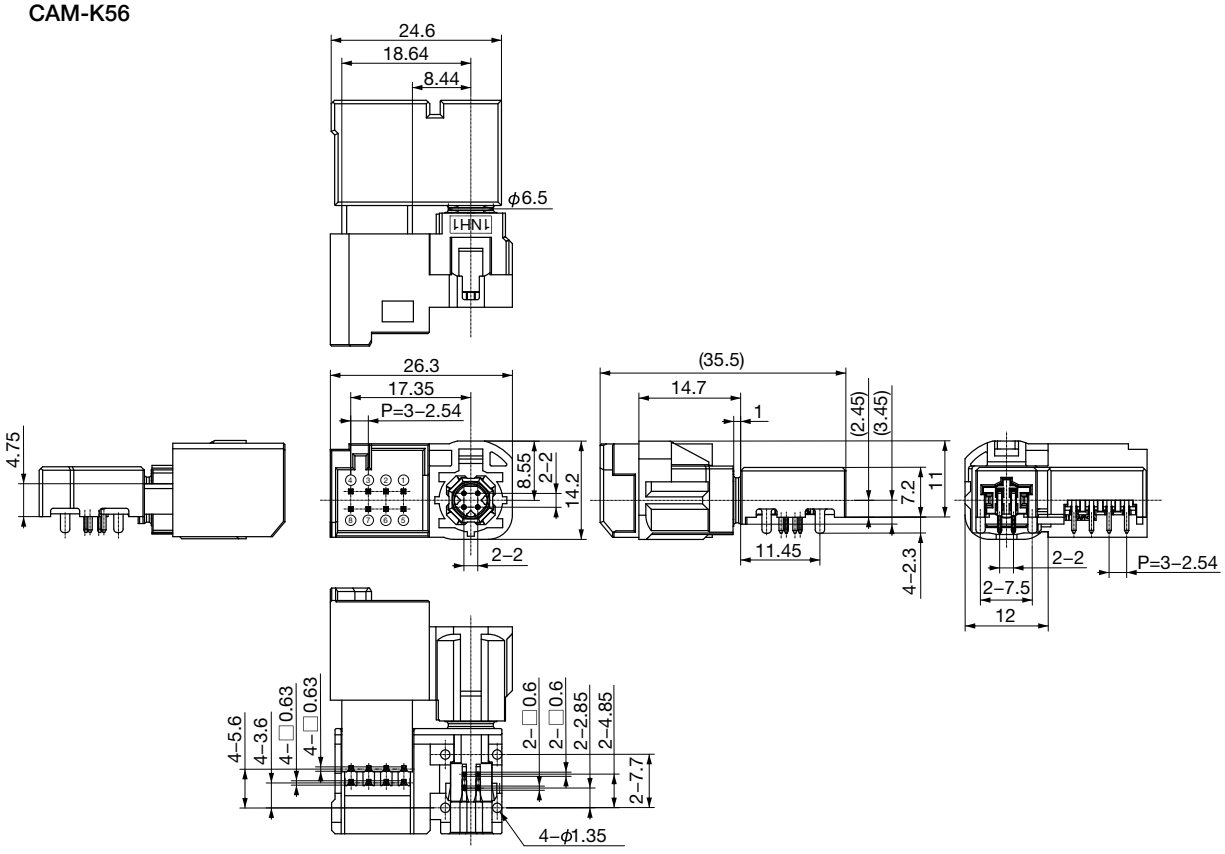

Unit : mm

• Any products mentioned in this catalog are subject to any modification in their appearance and others for improvements without prior notification.
• The details listed here are not a guarantee of the individual products at the time of ordering. When using the products, you will be asked to check their specifications.

CAM-L44

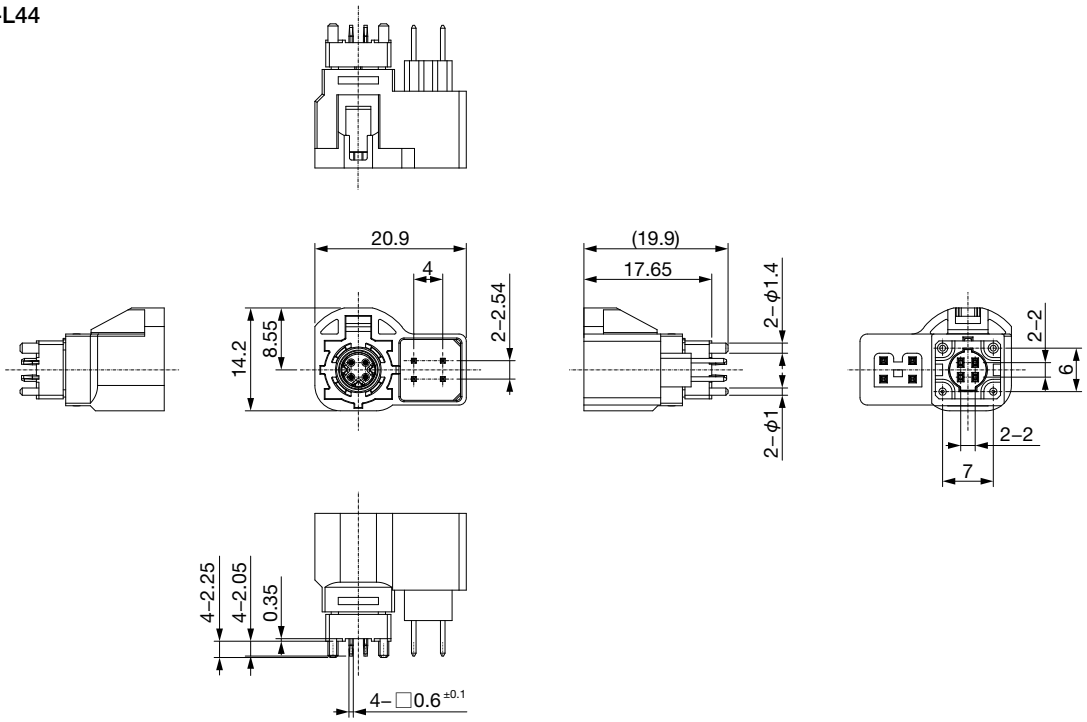

Unit : mm

• Any products mentioned in this catalog are subject to any modification in their appearance and others for improvements without prior notification.
• The details listed here are not a guarantee of the individual products at the time of ordering. When using the products, you will be asked to check their specifications.