SPECIFICATION

Part No. : **CAB.011**

Product Name : Taoglas Cable Assembly
IPEX MHFI to SMA(F)Bulkhead Straight Connector
with 95mm ∅1.13 cable

Photo :



1. Cable Insertion Loss

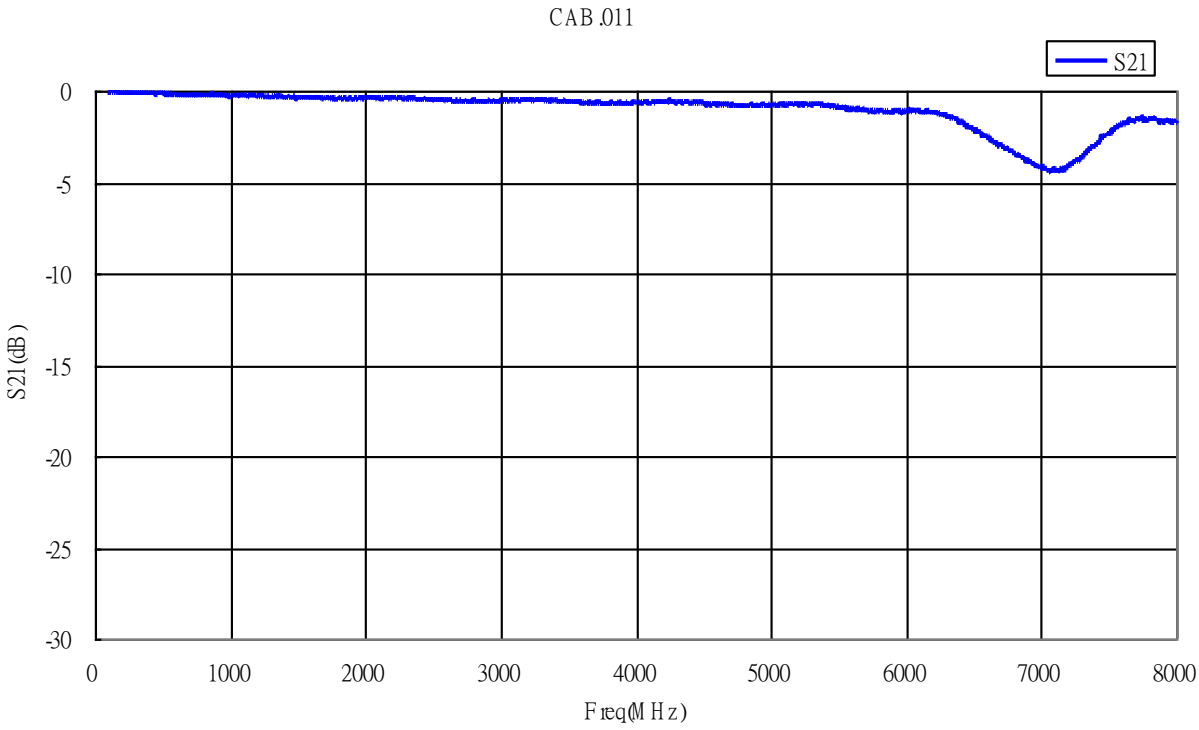

2. 1.13 Cable Specification

2.1 Drawing – Cross Section

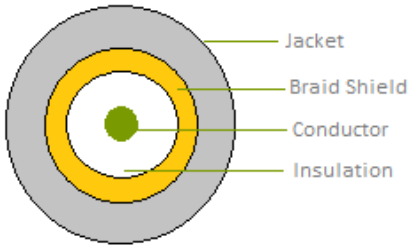

2.2 Structure and Dimensions



Conductor	Insulation	Braid Shield	Jacket
• Material – Silver Coated Copper	• Material – FEP	• Material–Tinned-Coated Copper	• Material – FEP
• 32AWG(7/0.080mm)	• Avg. Thickness- 0.22mm	• Structure – 16/4/0.050mm±0.003	• Avg. Thickness- 0.13mm
• Diameter - 0.24mm	• Diameter – 0.68 ± 0.02mm	• Coverage – 90%	• Diameter – 1.13 ± 0.05mm
	• Colour - Clear	• Diameter – 0.90 ± 0.02mm	• Colour – Grey GY-08

2.3 Electrical & Physical Specification

1	Item:			32 AWG
2	Rating Temp Voltage:			105°C 30V UL 1979
3	Insulation Resistance:			1000 MEGA OHM-KM Min.
4	Conductor Resistance:			545 OHM/KM/20°C Max.
5	Dielectric Strength:			AC 1.0 KV/minute
6	Spark test:			2.5 KV
7	Insulation	Unaged	Tensile Strength	2500 PSI Min.(1.76Kg/mm²)
			Elongation	200% min.
		Aged	Tensile Strength	Unaged Min 75%(168HRS*232°C)
			Elongation	Unaged Min 75%(168HRS*232°C)
8	Jacket	Unaged	Tensile Strength	2500 PSI Min.(1.76Kg/mm²)
			Elongation	200% min.
		Aged	Tensile Strength	Unaged Min 75%(168HRS*232°C)
			Elongation	Unaged Min 75%(168HRS*232°C)
9	Nom. Impedance			50 ± 3 Ohms
10	Nom. Capacitance			96 ± 3 pF/m
11	Nom. Vel. Of Prop.			69%
12	VSWR (0-6GHz)			Max 1.3
13	Flame Test			VW-1 OK
14	Attenuation (dB/1M)			2.0GHz 2.80
				2.4GHz 3.10
				3.0GHz 3.50
				4.0GHz 4.00
				5.0GHz 4.60
				6.0GHz 5.10

3. Technical Drawing

3.1 CAB.011

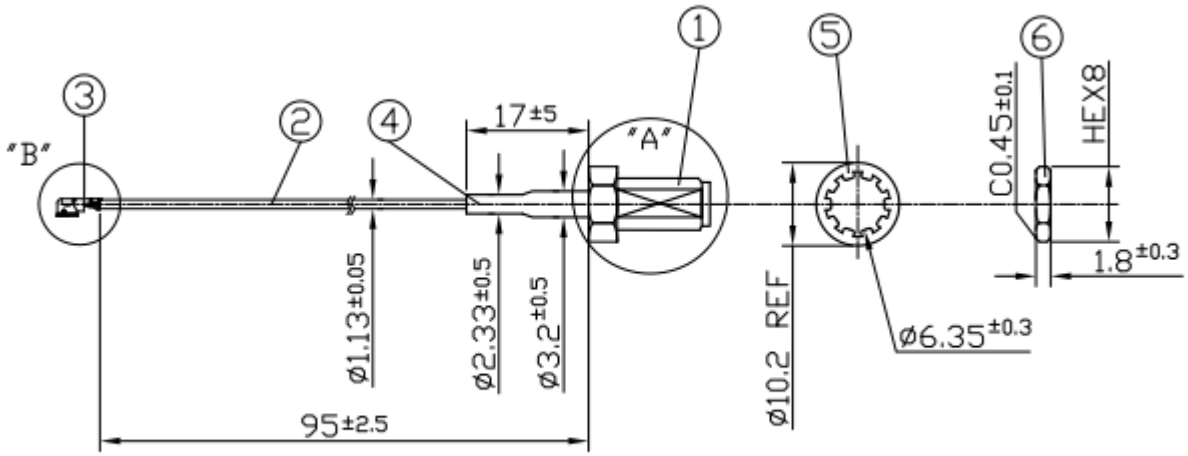

	Name	Material	Finish	QTY
1	SMA(F) Bulk Head ST	Brass	Gold	1
2	1.13 Coaxial Cable	FEP Jacket	Black	1
3	IPEX MHF1	Brass	Gold	1
4	Heat Shrink Tube	PE	Black	1
5	Washer	Brass	Gold	1
6	Nut	Brass	Gold	1

3.2 Connectors

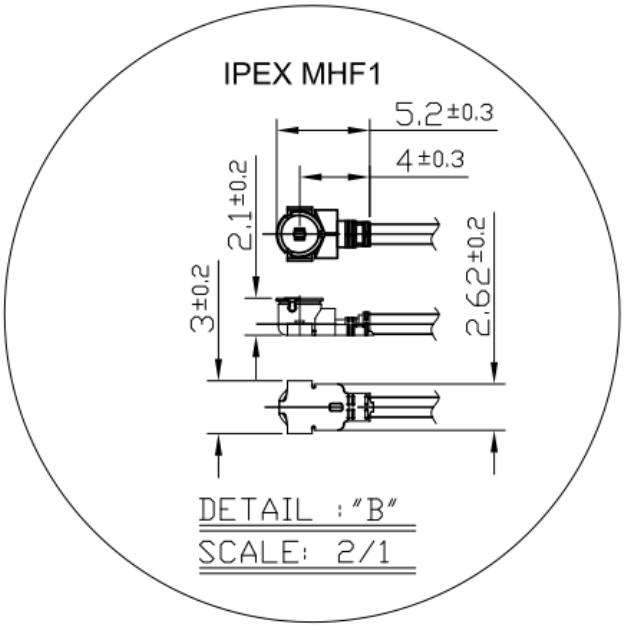

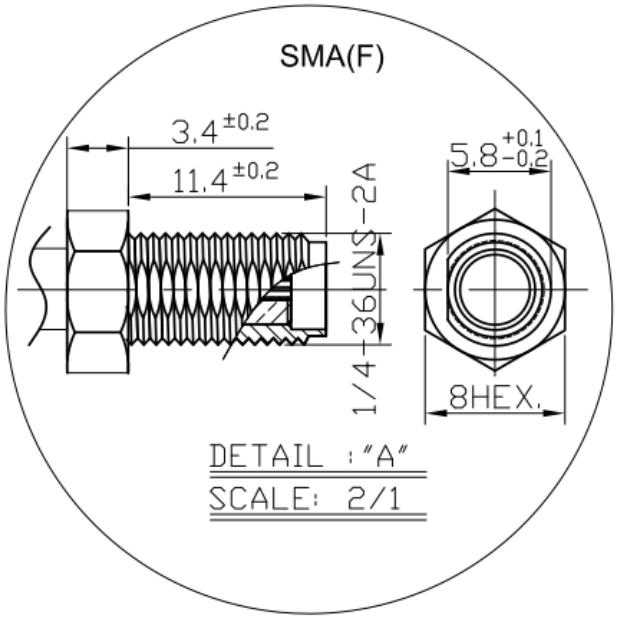

3.3 Recommended Mounting Hole – SMA(F) Bulkhead

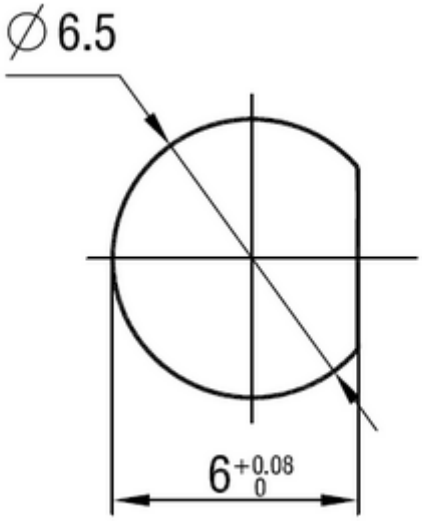

4. Packaging

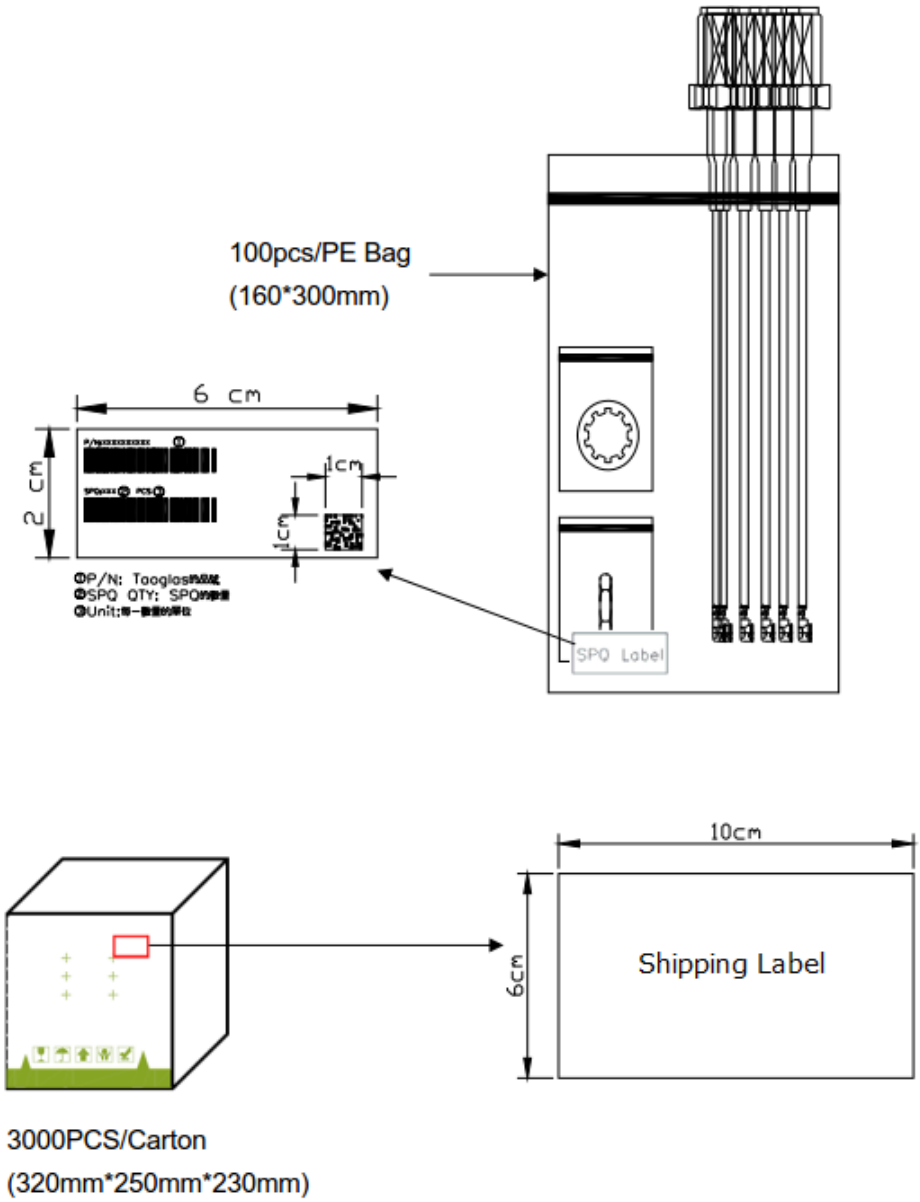

3000PCS/Carton
(320mm*250mm*230mm)