CA3080, CA3080A

2MHz, Operational Transconductance Amplifier (OTA)

FN475
Rev.6.00
Jan 13, 2017

The CA3080 and CA3080A types are Gatable-Gain Blocks which utilize the unique operational-transconductance-amplifier (OTA) concept described in Application Note AN6668, “Applications of the CA3080 and CA3080A High-Performance Operational Transconductance Amplifiers”.

The CA3080 and CA3080A types have differential input and a single-ended, push-pull, class A output. In addition, these types have an amplifier bias input which may be used either for gating or for linear gain control. These types also have a high output impedance and their transconductance (g_M) is directly proportional to the amplifier bias current (I_{ABC}).

The CA3080 and CA3080A types are notable for their excellent slew rate (50V/μs), which makes them especially useful for multiplexer and fast unity-gain voltage followers. These types are especially applicable for multiplexer applications because power is consumed only when the devices are in the “ON” channel state.

The CA3080A’s characteristics are specifically controlled for applications such as sample-hold, gain-control, multiplexing, etc.

Part Number Information

PART NUMBER (BRAND)	TEMP. RANGE (^oC)	PACKAGE	PKG. NO.
CA3080AE	-55 to 125	8 Ld PDIP	E8.3
CA3080AM (3080A)	-55 to 125	8 Ld SOIC	M8.15
CA3080AM96 (3080A)	-55 to 125	8 Ld SOIC Tape and Reel	M8.15
CA3080E	0 to 70	8 Ld PDIP	E8.3
CA3080M (3080)	0 to 70	8 Ld SOIC	M8.15
CA3080M96 (3080)	0 to 70	8 Ld SOIC Tape and Reel	M8.15

Features

- Slew Rate (Unity Gain, Compensated) 50V/μs
- Adjustable Power Consumption . . . . . 10μW to 30μW
- Flexible Supply Voltage Range . . . . . ±2V to ±15V
- Fully Adjustable Gain . . . . . .0 to $g_M R_L$ Limit
- Tight g_M Spread:
  - CA3080. . . . . 2:1
  - CA3080A 1.6:1
- Extended g_M Linearity . . . . . 3 Decades

Applications

- Sample and Hold
- Multiplexer
- Voltage Follower
- Multiplier
- Comparator

Pinouts

CA3080
(PDIP, SOIC)
TOP VIEW

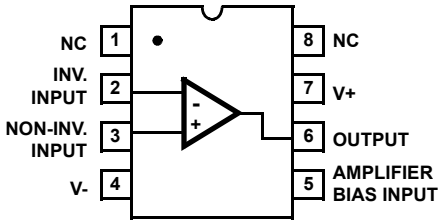

Absolute Maximum Ratings

Supply Voltage (Between V+ and V- Terminal) 36V
Differential Input Voltage 5V
Input Voltage . . . . . V+ to V-
Input Signal Current 1mA
Amplifier Bias Current (I_{ABC}) 2mA
Output Short Circuit Duration (Note 1) . . . . . No Limitation

Thermal Information

Thermal Resistance (Typical, Note 2)	θ_{JA} (^{o}C/W)	θ_{JC} (^{o}C/W)
PDIP Package	130	N/A
SOIC Package	170	N/A

Maximum Junction Temperature (Plastic Package) . . . . . 150°C
Maximum Storage Temperature Range . . . . . -65°C to 150°C
Maximum Lead Temperature (Soldering 10s) . . . . . 300°C
(SOIC - Lead Tips Only)

Operating Conditions

Temperature Range
CA3080 . . . . . 0°C to 70°C
CA3080A . . . . . -55°C to 125°C

CAUTION: Stresses above those listed in "Absolute Maximum Ratings" may cause permanent damage to the device. This is a stress only rating and operation of the device at these or any other conditions above those indicated in the operational sections of this specification is not implied.

NOTES:

1. Short circuit may be applied to ground or to either supply.
2. θ_{JA} is measured with the component mounted on an evaluation PC board in free air.

Electrical Specifications

For Equipment Design, $V_{SUPPLY} = \pm 15V$, Unless Otherwise Specified

PARAMETER		TEST CONDITIONS	TEMP	CA3080			CA3080A			UNITS
				MIN	TYP	MAX	MIN	TYP	MAX	
Input Offset Voltage		$I_{ABC} = 5\mu A$	25	-	0.3	-	-	0.3	2	mV
		$I_{ABC} = 500\mu A$	25	-	0.4	5	-	0.4	2	mV
			Full	-	-	6	-	-	5	mV
Input Offset Voltage Change		$I_{ABC} = 500\mu A$ to $5\mu A$	25	-	0.2	-	-	0.1	3	mV
Input Offset Voltage Temp. Drift		$I_{ABC} = 100\mu A$	Full	-	-	-	-	3.0	-	$\mu V/^{o}C$
Input Offset Voltage Sensitivity	Positive	$I_{ABC} = 500\mu A$	25	-	-	150	-	-	150	$\mu V/V$
	Negative		25	-	-	150	-	-	150	$\mu V/V$
Input Offset Current		$I_{ABC} = 500\mu A$	25	-	0.12	0.6	-	0.12	0.6	μA
Input Bias Current		$I_{ABC} = 500\mu A$	25	-	2	5	-	2	5	μA
			Full	-	-	7	-	-	15	μA
Differential Input Current		$I_{ABC} = 0$, $V_{DIFF} = 4V$	25	-	0.008	-	-	0.008	5	nA
Amplifier Bias Voltage		$I_{ABC} = 500\mu A$	25	-	0.71	-	-	0.71	-	V
Input Resistance		$I_{ABC} = 500\mu A$	25	10	26	-	10	26	-	$k\Omega$
Input Capacitance		$I_{ABC} = 500\mu A$, f = 1MHz	25	-	3.6	-	-	3.6	-	pF
Input-to-Output Capacitance		$I_{ABC} = 500\mu A$, f = 1MHz	25	-	0.024	-	-	0.024	-	pF
Common-Mode Input-Voltage Range		$I_{ABC} = 500\mu A$	25	12 to -12	13.6 to -14.6	-	12 to -12	13.6 to -14.6	-	V
Forward Transconductance (Large Signal)		$I_{ABC} = 500\mu A$	25	6700	9600	13000	7700	9600	12000	μS
			Full	5400	-	-	4000	-	-	μS
Output Capacitance		$I_{ABC} = 500\mu A$, f = 1MHz	25	-	5.6	-	-	5.6	-	pF
Output Resistance		$I_{ABC} = 500\mu A$	25	-	15	-	-	15	-	$M\Omega$
Peak Output Current		$I_{ABC} = 5\mu A$, $R_L = 0\Omega$	25	-	5	-	3	5	7	μA
		$I_{ABC} = 500\mu A$, $R_L = 0\Omega$	25	350	500	650	350	500	650	μA
			Full	300	-	-	300	-	-	μA

Electrical Specifications For Equipment Design, $V_{SUPPLY} = \pm 15V$, Unless Otherwise Specified **(Continued)**

PARAMETER		TEST CONDITIONS	TEMP	CA3080			CA3080A			UNITS
				MIN	TYP	MAX	MIN	TYP	MAX	
Peak Output Voltage	Positive	$I_{ABC} = 5\mu A$, $R_L = \infty$	25	-	13.8	-	12	13.8	-	V
	Negative		25	-	-14.5	-	-12	-14.5	-	V
	Positive	$I_{ABC} = 500\mu A$, $R_L = \infty$	25	12	13.5	-	12	13.5	-	V
	Negative		25	-12	-14.4	-	-12	-14.4	-	V
Amplifier Supply Current		$I_{ABC} = 500\mu A$	25	0.8	1	1.2	0.8	1	1.2	mA
Device Dissipation		$I_{ABC} = 500\mu A$	25	24	30	36	24	30	36	mW
Magnitude of Leakage Current		$I_{ABC} = 0$, $V_{TP} = 0$	25	-	0.08	-	-	0.08	5	nA
		$I_{ABC} = 0$, $V_{TP} = 36V$	25	-	0.3	-	-	0.3	5	nA
Propagation Delay		$I_{ABC} = 500\mu A$	25	-	45	-	-	45	-	ns
Common-Mode Rejection Ratio		$I_{ABC} = 500\mu A$	25	80	110	-	80	110	-	dB
Open-Loop Bandwidth		$I_{ABC} = 500\mu A$	25	-	2	-	-	2	-	MHz
Slew Rate		Uncompensated	25	-	75	-	-	75	-	V/µs
		Compensated	25	-	50	-	-	50	-	V/µs

Schematic Diagram

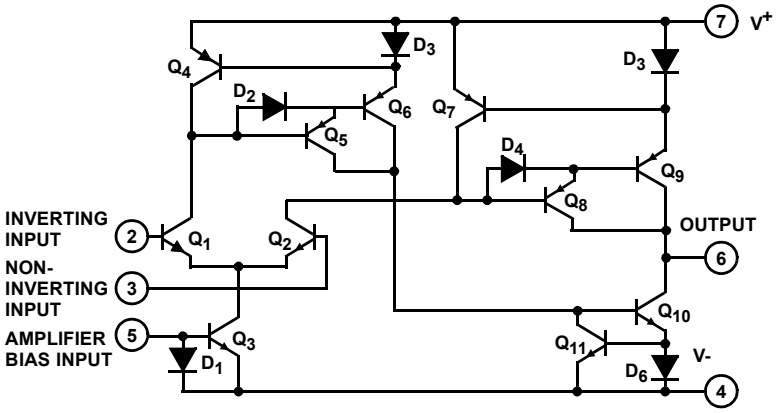

Typical Applications

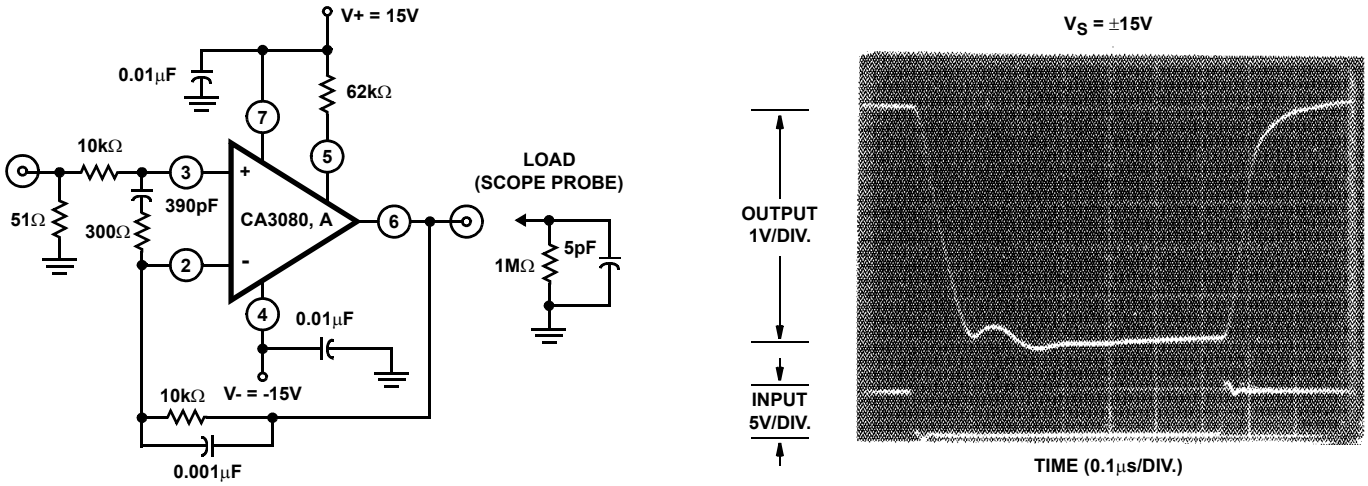

FIGURE 1. SCHEMATIC DIAGRAM OF THE CA3080 AND CA3080A IN A UNITY-GAIN VOLTAGE FOLLOWER CONFIGURATION AND ASSOCIATED WAVEFORM

Typical Applications (Continued)

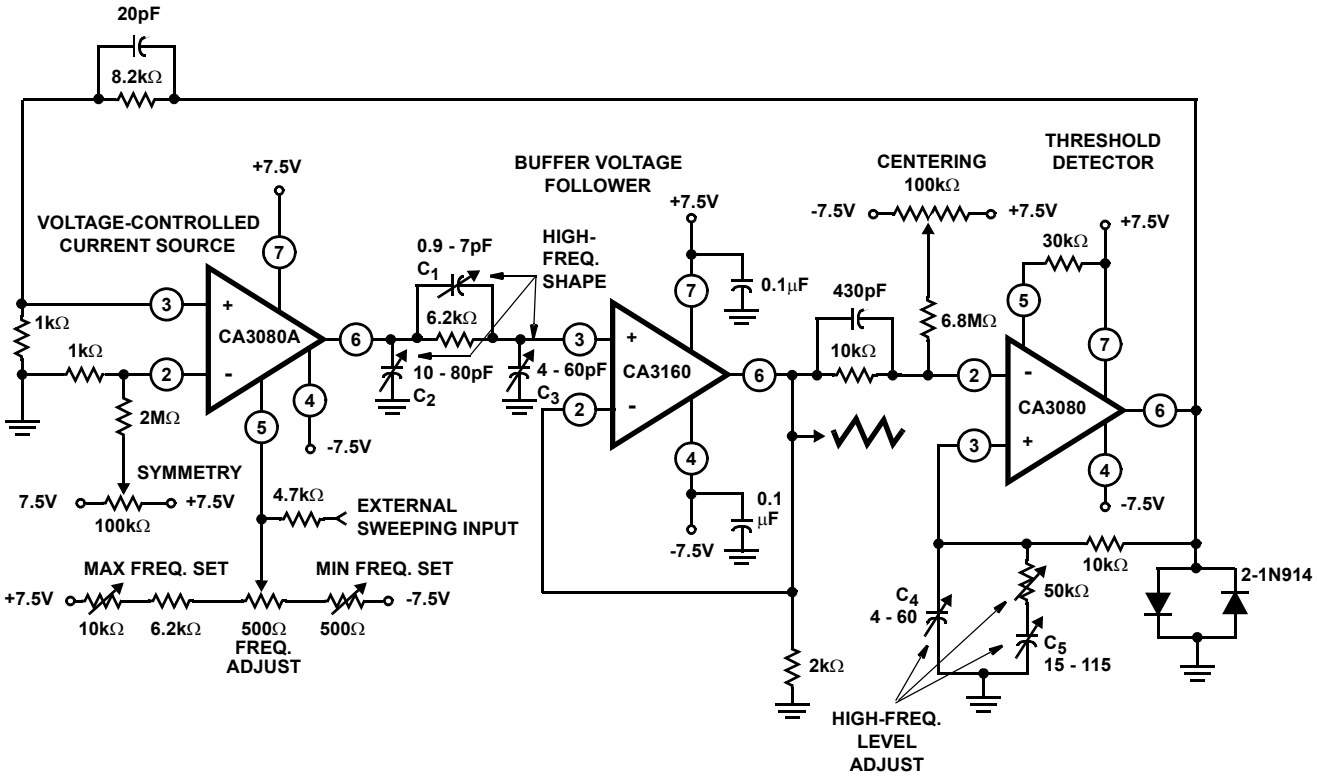

FIGURE 2. 1,000,000/1 SINGLE-CONTROL FUNCTION GENERATOR - 1MHz TO 1Hz

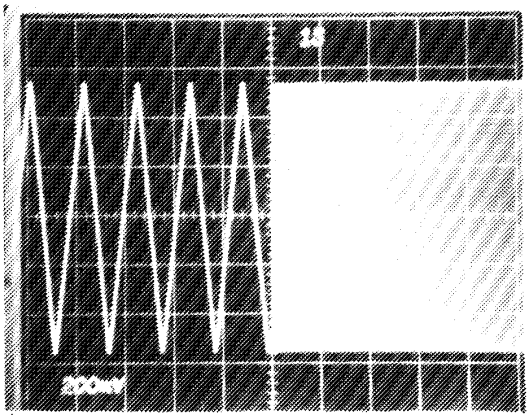

NOTE: A Square-Wave Signal Modulates The External Sweeping Input to Produce 1Hz and 1MHz, showing the 1,000,000/1 frequency range of the function generator.

FIGURE 3A. TWO-TONE OUTPUT SIGNAL FROM THE FUNCTION GENERATOR

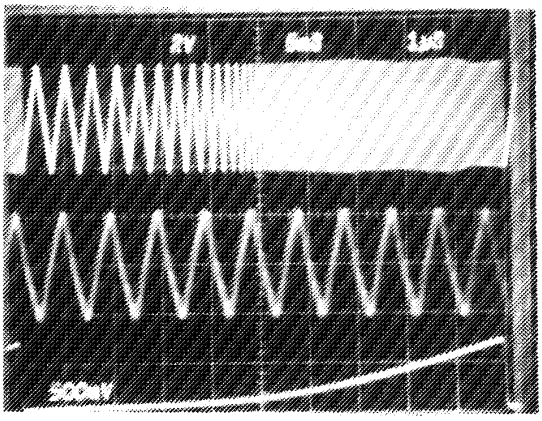

NOTE: The bottom trace is the sweeping signal and the top trace is the actual generator output. The center trace displays the 1MHz signal via delayed oscilloscope triggering of the upper swept output signal.

FIGURE 3B. TRIPLE-TRACE OF THE FUNCTION GENERATOR SWEEPING TO 1MHz

FIGURE 3. FUNCTION GENERATOR DYNAMIC CHARACTERISTICS WAVEFORMS

Typical Applications (Continued)

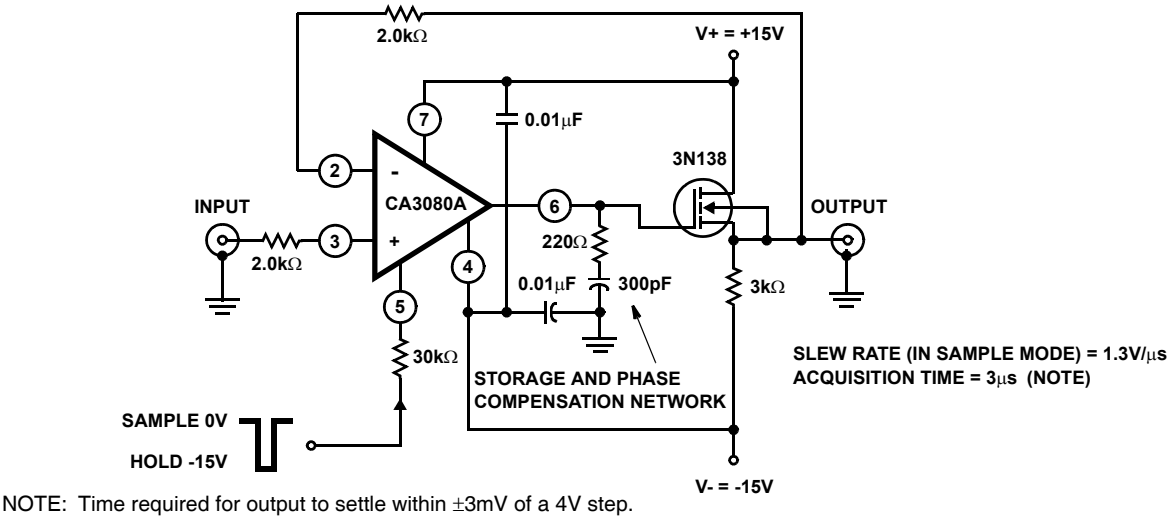

NOTE: Time required for output to settle within ±3mV of a 4V step.

FIGURE 4. SCHEMATIC DIAGRAM OF THE CA3080A IN A SAMPLE-HOLD CONFIGURATION

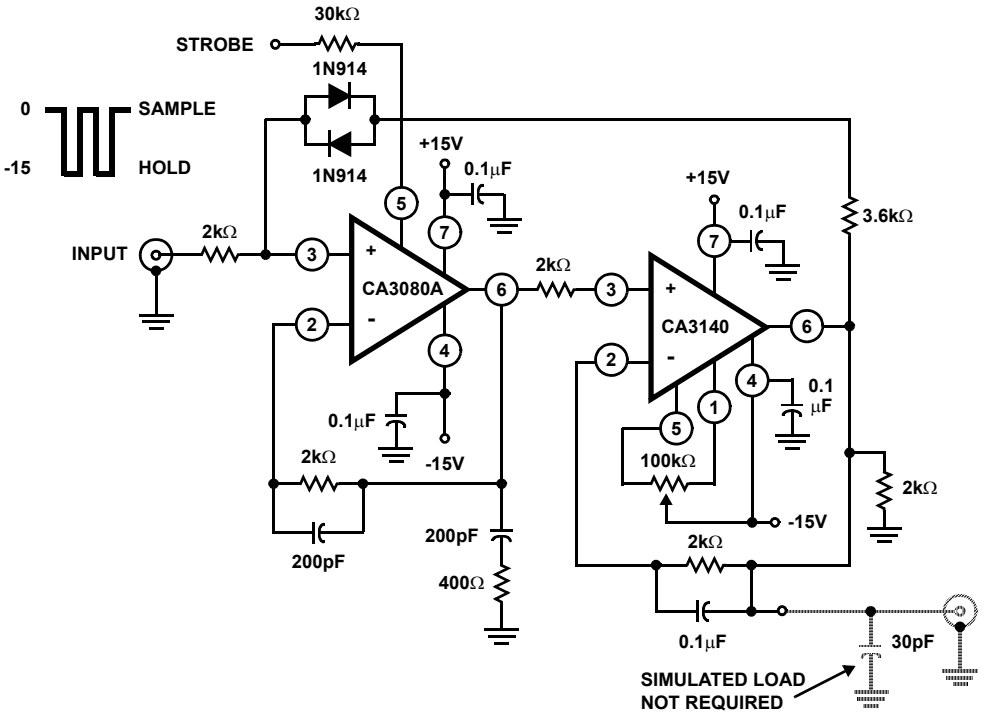

FIGURE 5. SAMPLE AND HOLD CIRCUIT

Typical Applications (Continued)

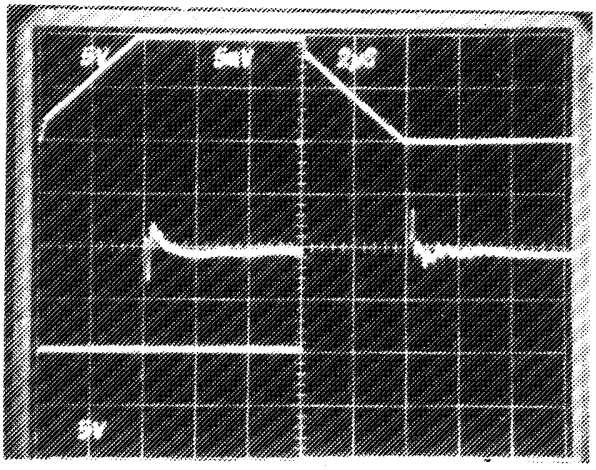

Top Trace: Output Signal
5V/Div., 2μs/Div.
Bottom Trace: Input Signal
5V/Div., 2μs/Div.
Center Trace: Difference of Input and Output Signals Through Tektronix Amplifier 7A13
5mV/Div., 2μs/Div.

FIGURE 6. LARGE SIGNAL RESPONSE AND SETTLING TIME FOR CIRCUIT SHOWN IN FIGURE 5

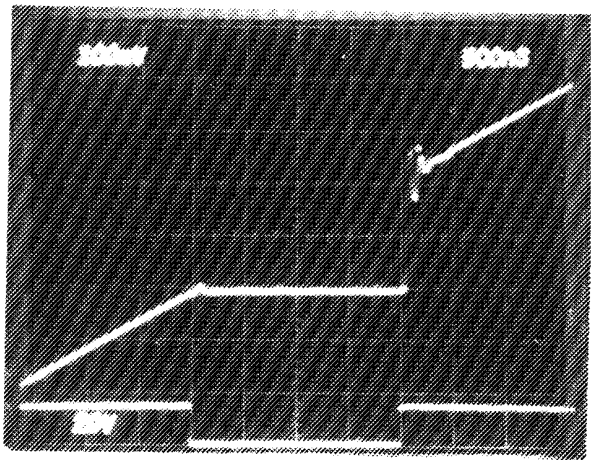

Top Trace: System Output; 100mV/Div., 500ns/Div.
Bottom Trace: Sampling Signal; 20V/Div., 500ns/Div.

FIGURE 7. SAMPLING RESPONSE FOR CIRCUIT SHOWN IN FIGURE 5

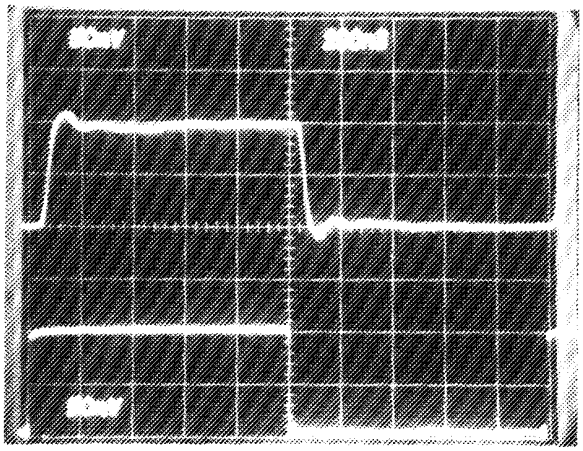

Top Trace: Output; 50mV/Div., 200ns/Div.
Bottom Trace: Input; 50mV/Div., 200ns/Div.

FIGURE 8. INPUT AND OUTPUT RESPONSE FOR CIRCUIT SHOWN IN FIGURE 5

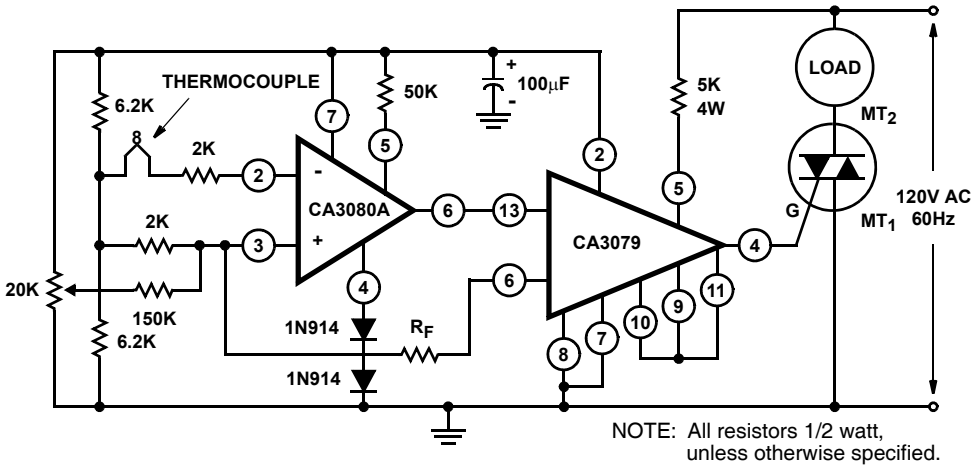

FIGURE 9. THERMOCOUPLE TEMPERATURE CONTROL WITH CA3079 ZERO VOLTAGE SWITCH AS THE OUTPUT AMPLIFIER

Typical Applications (Continued)

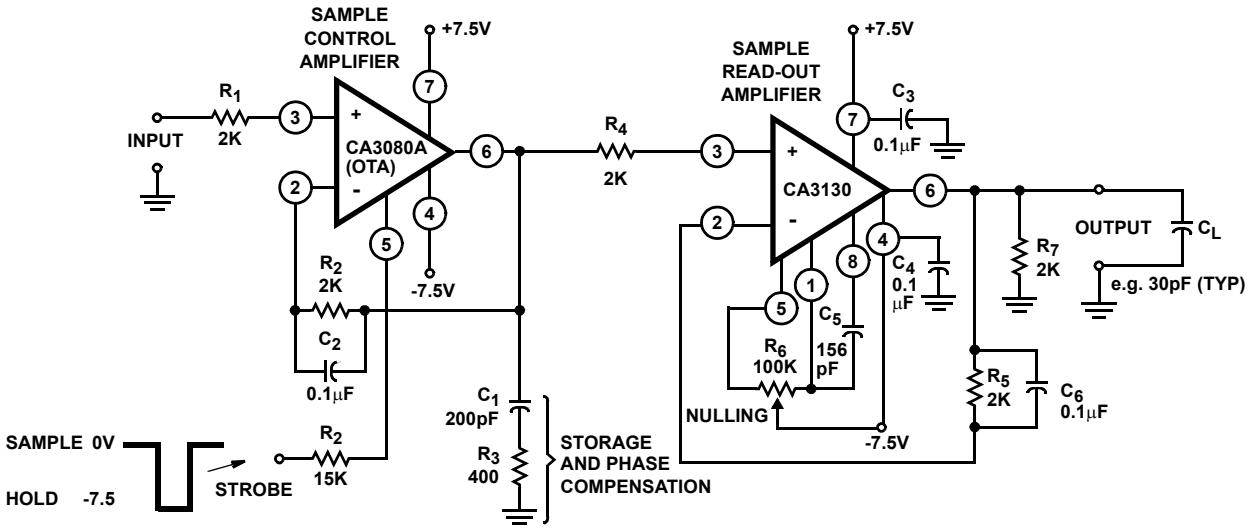

FIGURE 10. SCHEMATIC DIAGRAM OF THE CA3080A IN A SAMPLE-HOLD CIRCUIT WITH BIMOS OUTPUT AMPLIFIER

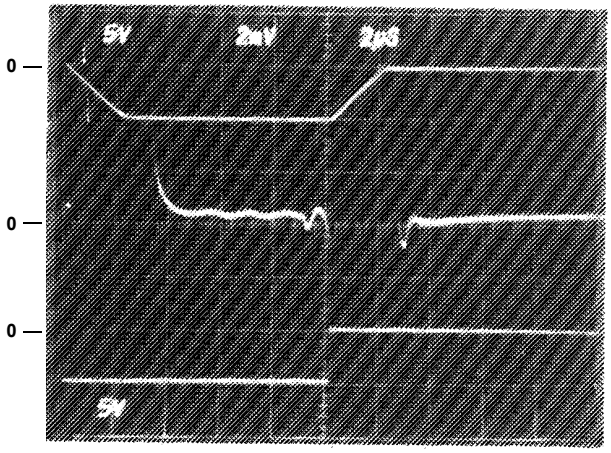

Top Trace: Output; 5V/Div., 2μs/Div.
Center Trace: Differential Comparison of Input and Output 2mV/Div., 2μs/Div.
Bottom Trace: Input; 5V/Div., 2μs/Div.

FIGURE 11. LARGE-SIGNAL RESPONSE FOR CIRCUIT SHOWN IN FIGURE 10

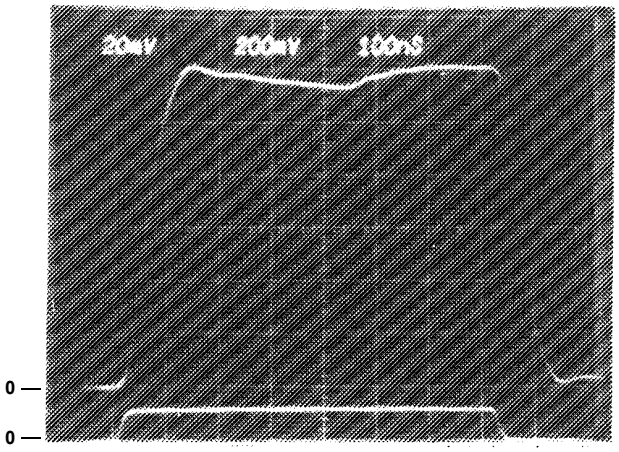

Top Trace: Output 20mV/Div., 100ns/Div.
Bottom Trace: Input 200mV/Div., 100ns/Div.

FIGURE 12. SMALL-SIGNAL RESPONSE FOR CIRCUIT SHOWN IN FIGURE 10

Typical Applications (Continued)

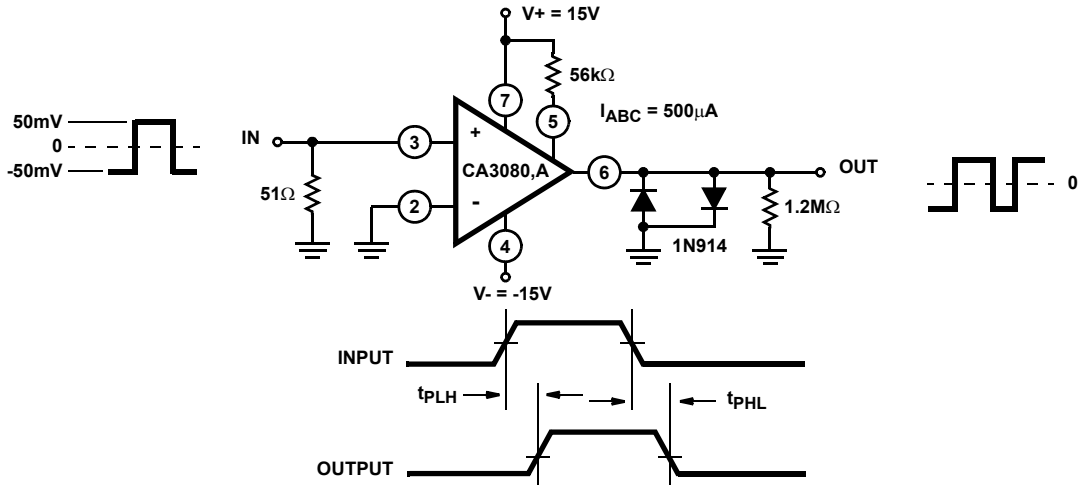

FIGURE 13. PROPAGATION DELAY TEST CIRCUIT AND ASSOCIATED WAVEFORMS

Typical Performance Curves

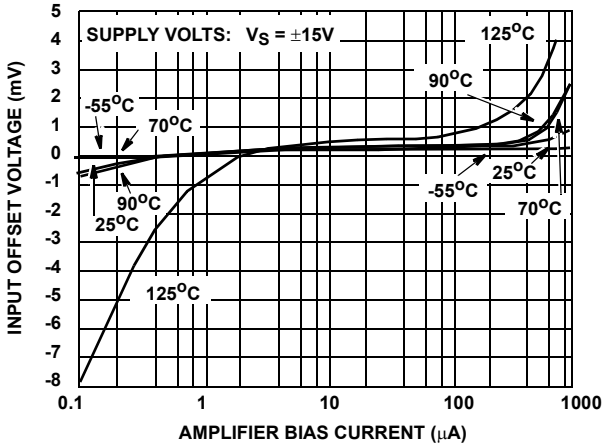

FIGURE 14. INPUT OFFSET VOLTAGE vs AMPLIFIER BIAS CURRENT

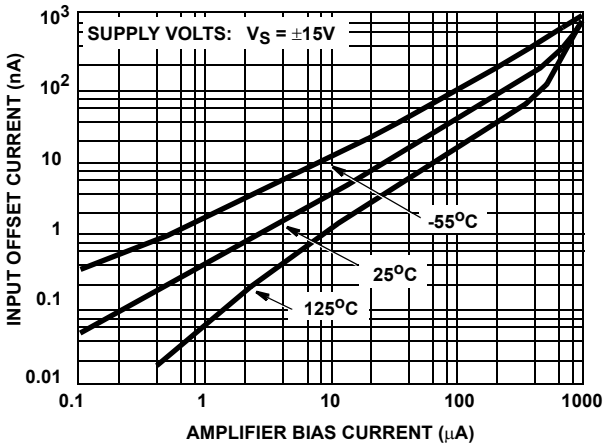

FIGURE 15. INPUT OFFSET CURRENT vs AMPLIFIER BIAS CURRENT

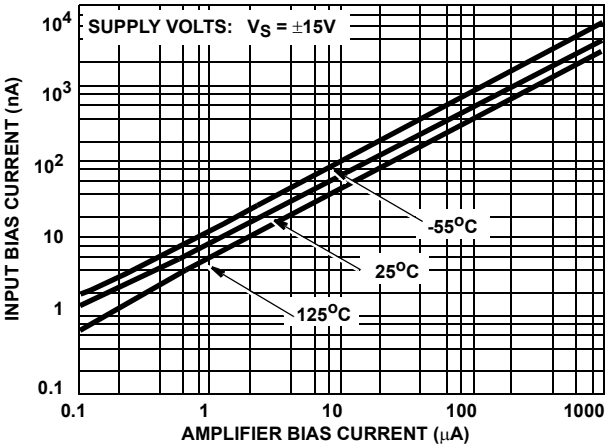

FIGURE 16. INPUT BIAS CURRENT vs AMPLIFIER BIAS CURRENT

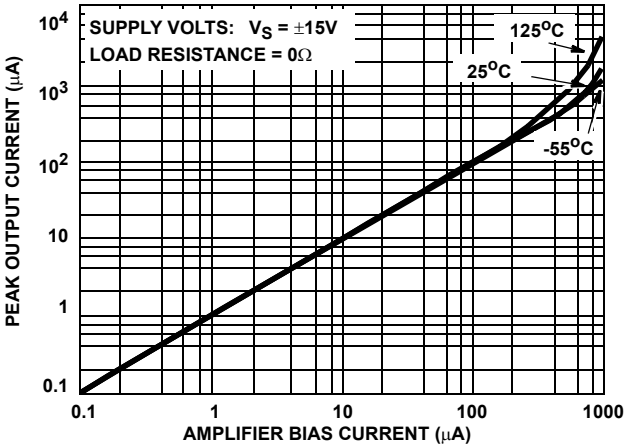

FIGURE 17. PEAK OUTPUT CURRENT vs AMPLIFIER BIAS CURRENT

Typical Performance Curves (Continued)

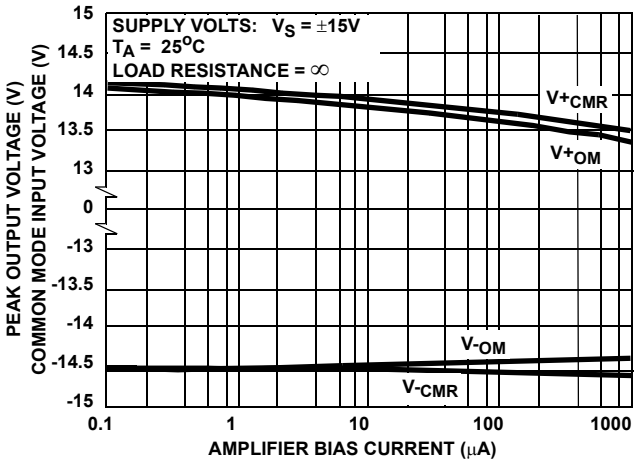

FIGURE 18. PEAK OUTPUT VOLTAGE vs AMPLIFIER BIAS CURRENT

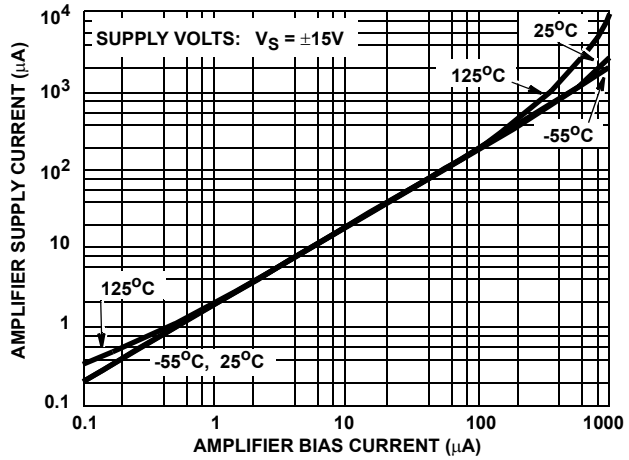

FIGURE 19. AMPLIFIER SUPPLY CURRENT vs AMPLIFIER BIAS CURRENT

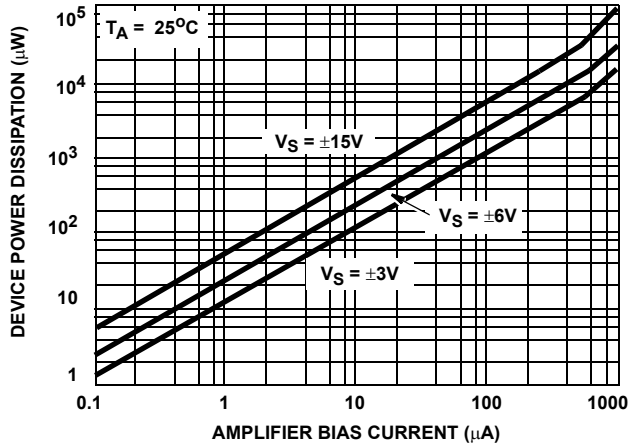

FIGURE 20. TOTAL POWER DISSIPATION vs AMPLIFIER BIAS CURRENT

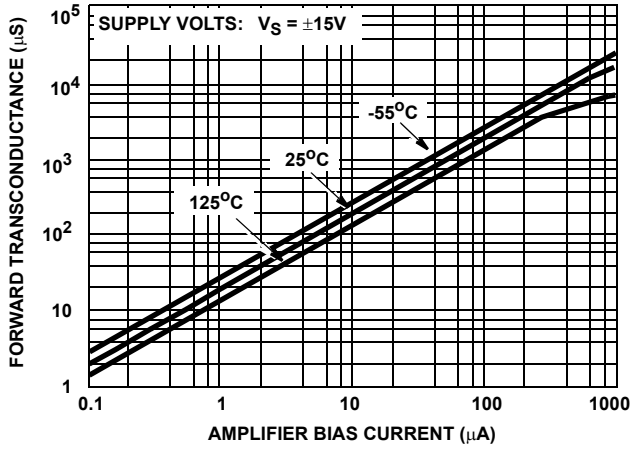

FIGURE 21. TRANSCONDUCTANCE vs AMPLIFIER BIAS CURRENT

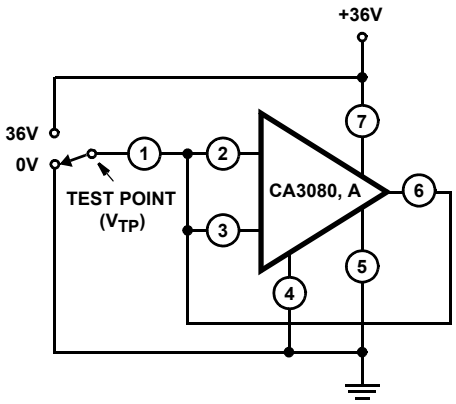

FIGURE 22. LEAKAGE CURRENT TEST CIRCUIT

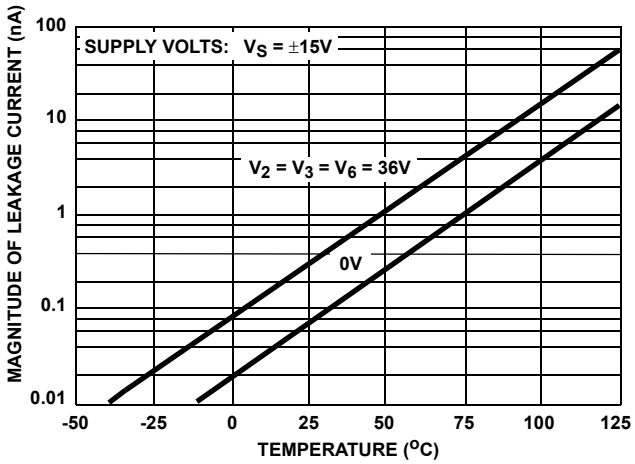

FIGURE 23. LEAKAGE CURRENT vs TEMPERATURE

Typical Performance Curves (Continued)

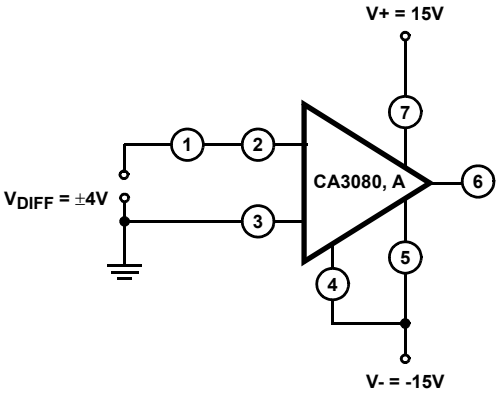

FIGURE 24. DIFFERENTIAL INPUT CURRENT TEST CIRCUIT

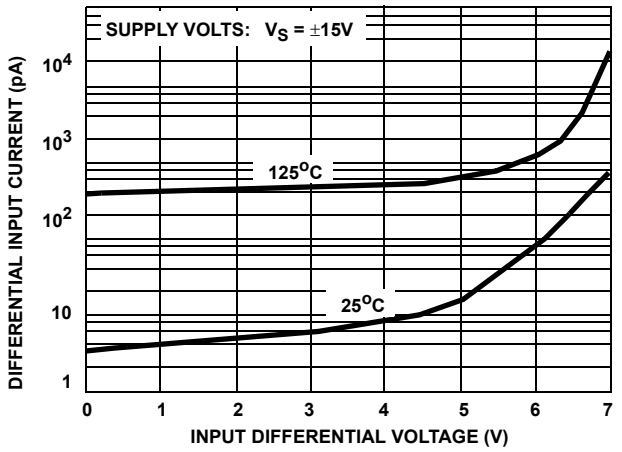

FIGURE 25. INPUT CURRENT vs INPUT DIFFERENTIAL VOLTAGE

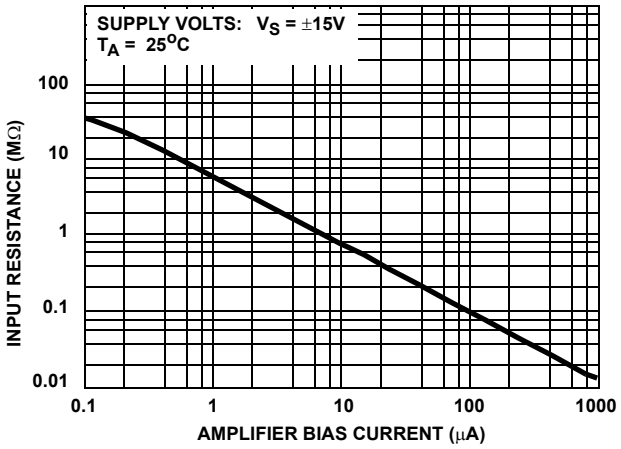

FIGURE 26. INPUT RESISTANCE vs AMPLIFIER BIAS CURRENT

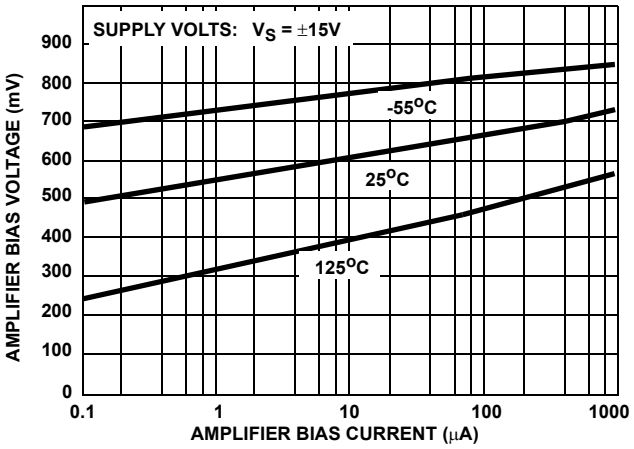

FIGURE 27. AMPLIFIER BIAS VOLTAGE vs AMPLIFIER BIAS CURRENT

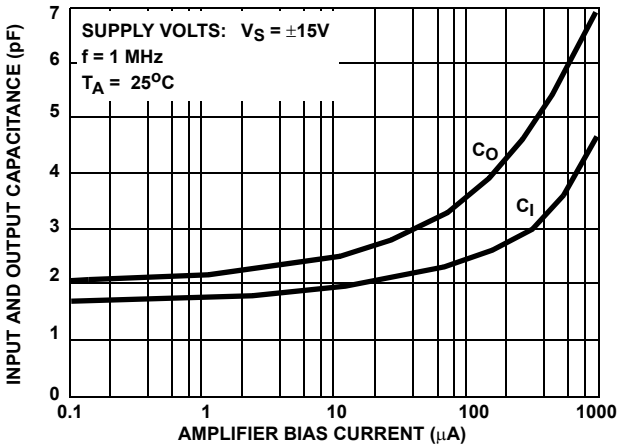

FIGURE 28. INPUT AND OUTPUT CAPACITANCE vs AMPLIFIER BIAS CURRENT

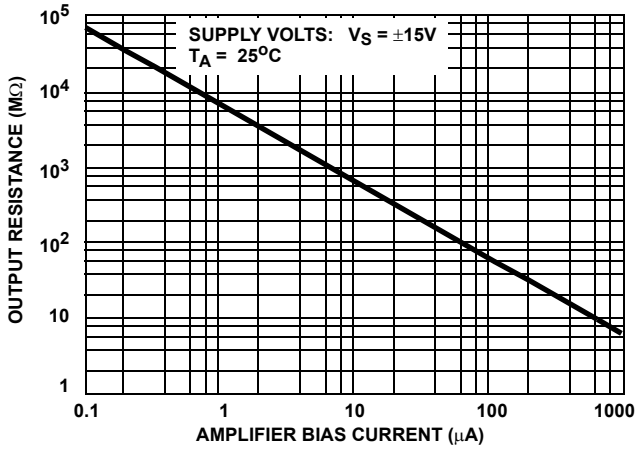

FIGURE 29. OUTPUT RESISTANCE vs AMPLIFIER BIAS CURRENT

Typical Performance Curves (Continued)

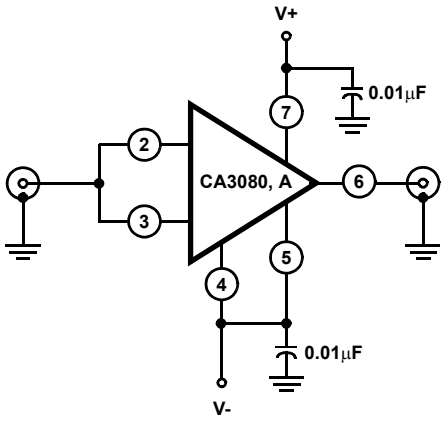

FIGURE 30. INPUT-TO-OUTPUT CAPACITANCE TEST CIRCUIT

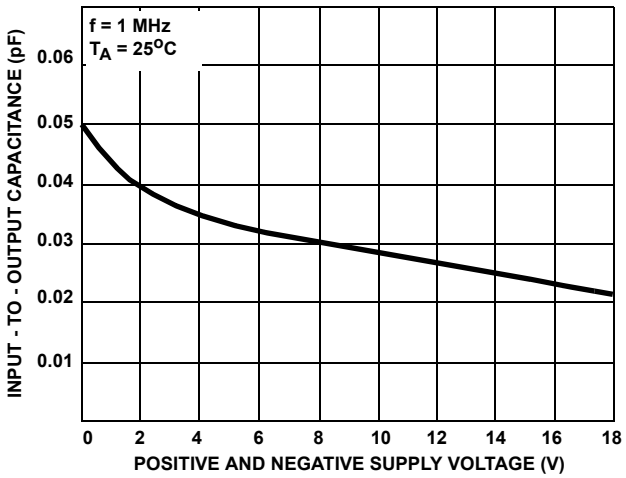

FIGURE 31. INPUT-TO-OUTPUT CAPACITANCE vs SUPPLY VOLTAGE

© Copyright Intersil Americas LLC 2001-2004. All Rights Reserved.
All trademarks and registered trademarks are the property of their respective owners.

For additional products, see www.intersil.com/en/products.html

Intersil products are manufactured, assembled and tested utilizing ISO9001 quality systems as noted in the quality certifications found at www.intersil.com/en/support/qualandreliability.html

Intersil products are sold by description only. Intersil may modify the circuit design and/or specifications of products at any time without notice, provided that such modification does not, in Intersil's sole judgment, affect the form, fit or function of the product. Accordingly, the reader is cautioned to verify that datasheets are current before placing orders. Information furnished by Intersil is believed to be accurate and reliable. However, no responsibility is assumed by Intersil or its subsidiaries for its use; nor for any infringements of patents or other rights of third parties which may result from its use. No license is granted by implication or otherwise under any patent or patent rights of Intersil or its subsidiaries.

For information regarding Intersil Corporation and its products, see www.intersil.com