C8051F96x

Ultra-Low-Power, High-Efficiency, Battery-Powered Metering MCU

Ultra-Low Power @ 3.6 V
- 110 µA/MHz, Low-Power Active, DC-DC enabled
- 110 nA sleep current with data retention; POR monitor enabled
- 400 nA sleep current with smaRTClock (internal LFO)
- 700 nA sleep current with smaRTClock (external XTAL)
- 2 µs wake-up from any sleep mode

12-Bit; 16 ch. Analog to Digital Converter
- Up to 75 ksps, 12-bit mode or 300 ksps 10-bit mode
- External pin or internal VREF (no external capacitor required)
- On-chip PGA allows measuring voltages up to twice the reference voltage
- Autonomous burst mode with 16-bit automatic averaging accumulator
- Integrated temperature sensor

Two Low Current Comparators
- Programmable hysteresis and response time
- Configurable as interrupt or reset source

Internal 6-Bit Current Reference
- Up to ±500 µA; source and sink capability
- Enhanced resolution via PWM interpolation

Integrated LCD Controller
- Supports up to 128 segments (32x4)
- Integrated charge pump for contrast control

Metering-Specific Peripherals
- DC-DC buck converter allows dynamic voltage scaling for maximum efficiency (250 mW output)
- Sleep-mode pulse accumulator with programmable switch de-bounce and pull-up control interfaces directly to metering sensor
- Data Packet Processing Engine (DPPE) includes hardware AES, DMA, CRC, and encoding blocks for acceleration of wireless protocols
- Manchester and Three-out-of-Six encoder hardware for power-efficient implementation of the wireless M-bus specification

High-Speed Enhanced 8051 µC Core
- Pipe-lined instruction architecture executes 70% of instructions in 1 or 2 system clocks

Memory
- Up to 128 kB Flash; In-system programmable; Full read/write/erase functionality over the entire supply range
- Up to 8 kB data retention RAM

Digital Peripherals
- Up to 57 port I/O; All 5 V tolerant with programmable drive strength
- Hardware enhanced UART, 2 SPI and I^2C serial ports available concurrently
- Four general-purpose 16-bit counter/timers
- 16-bit programmable counter array (PCA) with six capture/compare/PWM modules and watchdog timer

Clock Sources
- Precision internal oscillators: 24.5 MHz with ±2% accuracy supports UART operation; spread-spectrum mode for reduced EMI
- Low power internal oscillator: 20 MHz
- External oscillator: Crystal, RC, C, CMOS clock
- SmaRTClock oscillator: 32.768 kHz crystal or 16.4 kHz internal LFO with three independent alarms

On-Chip Debug
- On-chip debug circuitry facilitates full speed, non-intrusive in-system debug (no emulator required)
- Provides four breakpoints, single stepping

Package Options
- 76-pin DQFN (6x6 mm), RoHS compliant
- 40-pin QFN (6x6 mm), RoHS compliant
- 80-pin QFP (12x12 mm), RoHS compliant

Development Kit: C8051F960DK

Supply Voltage: 1.8 to 3.8 V

Temperature Range: –40 to +85 °C

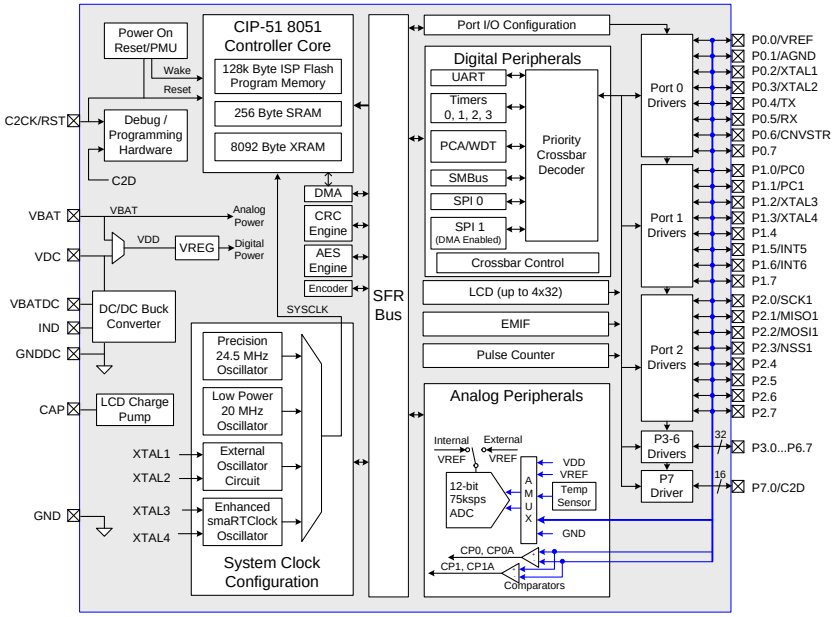

Copyright © 2011 by Silicon Laboratories

Selected Electrical Specifications

Parameter	Symbol	Conditions	Min	Typ	Max	Units
Active mode current	IBAT	VBAT = 3.6 V, F = 20 MHz	—	110	—	uA/MHz
Active mode current	IBAT	F = 20 MHz LFO; DC-DC enabled executing code from FLASH; PCLKACT = 0x00; VBAT = 3.6 V	—	2.2	—	mA
Sleep mode current	IDD	Sleep Mode, SmaRTClock running, internal LFO; 3.6 V	—	0.4	—	uA
Sleep mode current	IDD	Sleep Mode, SmaRTClock running, 32.768 kHz crystal; 3.6 V	—	0.7	—	uA
Buck regulator efficiency		3.6 V input voltage	—	80	—	%
LCD refresh current 1		Internal LFO, LCD charge pump disabled; 60 Hz; non-multiplexed operation (static mode); 3.6 V	—	0.4	—	uA
LCD refresh current 2		Internal LFO, LCD charge pump disabled; 60 Hz; multiplexed operation; 3.6 V	—	0.8	—	uA
Supply input voltage	VBAT		1.8	3.6	3.8	V

Product Family

Part Number	Memory (Flash/RAM)	I/O	LCD	Package (mm)
C8051F960-A-GM	128 kB / 8 kB	57	32x4	DQFN76 (6x6)
C8051F960-A-GQ	128 kB / 8 kB	57	32x4	QFP80 (12x12)
C8051F961-A-GM	128 kB / 8 kB	34	9x4	QFN40 (6x6)
C8051F962-A-GM	128 kB / 8 kB	57	—	DQFN76 (6x6)
C8051F962-A-GQ	128 kB / 8 kB	57	—	QFP80 (12x12)
C8051F963-A-GM	128 kB / 8 kB	34	—	QFN40 (6x6)
C8051F964-A-GM	64 kB / 8 kB	57	32x4	DQFN76 (6x6)
C8051F964-A-GQ	64 kB / 8 kB	57	32x4	QFP80 (12x12)
C8051F965-A-GM	64 kB / 8 kB	34	9x4	QFN40 (6x6)
C8051F966-A-GM	32 kB / 8 kB	57	32x4	DQFN76 (6x6)
C8051F966-A-GQ	32 kB / 8 kB	57	32x4	QFP80 (12x12)
C8051F967-A-GM	32 kB / 8 kB	34	9x4	QFN40 (6x6)
C8051F968-A-GM	16 kB / 4 kB	57	32x4	DQFN76 (6x6)
C8051F968-A-GQ	16 kB / 4 kB	57	32x4	QFP80 (12x12)
C8051F969-A-GM	16 kB / 4 kB	34	9x4	QFN40 (6x6)

Copyright © 2011 by Silicon Laboratories

Silicon Laboratories and Silicon Labs are trademarks of Silicon Laboratories Inc.
Other products or brandnames mentioned herein are trademarks or registered trademarks of their respective holders