COMPARATOR

- Programmable Hysteresis and Response Time
- Configurable as Wake-up or Reset Source
- Low Current (0.4uA)

ON-CHIP DEBUG

- On-Chip Debug Circuitry Facilitates Full Speed, Non-Intrusive In-System Debug (No Emulator Required!)
- Provides Breakpoints, Single Stepping, Watchpoints
- Inspect/Modify Memory, Registers, and Stack
- Superior Performance to Emulation Systems Using ICE-Chips, Target Pods, and Sockets
- Low Cost, **Complete** Development Kit

SUPPLY VOLTAGE ..... 2.7V to 3.6V

- Typical Operating Current: 5.8mA @ 25MHz
  11uA @ 32kHz
- Typical Stop Mode Current: <0.1uA

Temperature Range: –40°C to +85°C

HIGH SPEED 8051 µC Core

- Pipe-lined Instruction Architecture; Executes 70% of Instructions in 1 or 2 System Clocks
- Up to 25MIPS Throughput with 25MHz Clock
- Expanded Interrupt Handler

MEMORY

- 256 Bytes Internal Data RAM
- 8k Bytes FLASH; In-System Programmable in 512 byte Sectors

DIGITAL PERIPHERALS

- 8 Port I/O; All 5V tolerant with High Sink Current
- Enhanced Hardware UART and SMBus™ Serial Ports
- Three General Purpose 16-Bit Counter/Timers
- 16-bit Programmable Counter Array with Three Capture/Compare Modules, WDT
- Real Time Clock Mode using PCA or Timer and External Clock Source

CLOCK SOURCES

- Internal Oscillator: 20MHz Nominal
- External Oscillator: Crystal, RC, C, or Clock (1 or 2 Pin Modes)
- Can Switch Between Clock Sources on-the-fly; Useful in Power Saving Modes

11-Pin Micro Lead Package

- 3 x 3mm PCB Footprint; Actual MLP Size

SMBus is a trademark of Intel Corp.

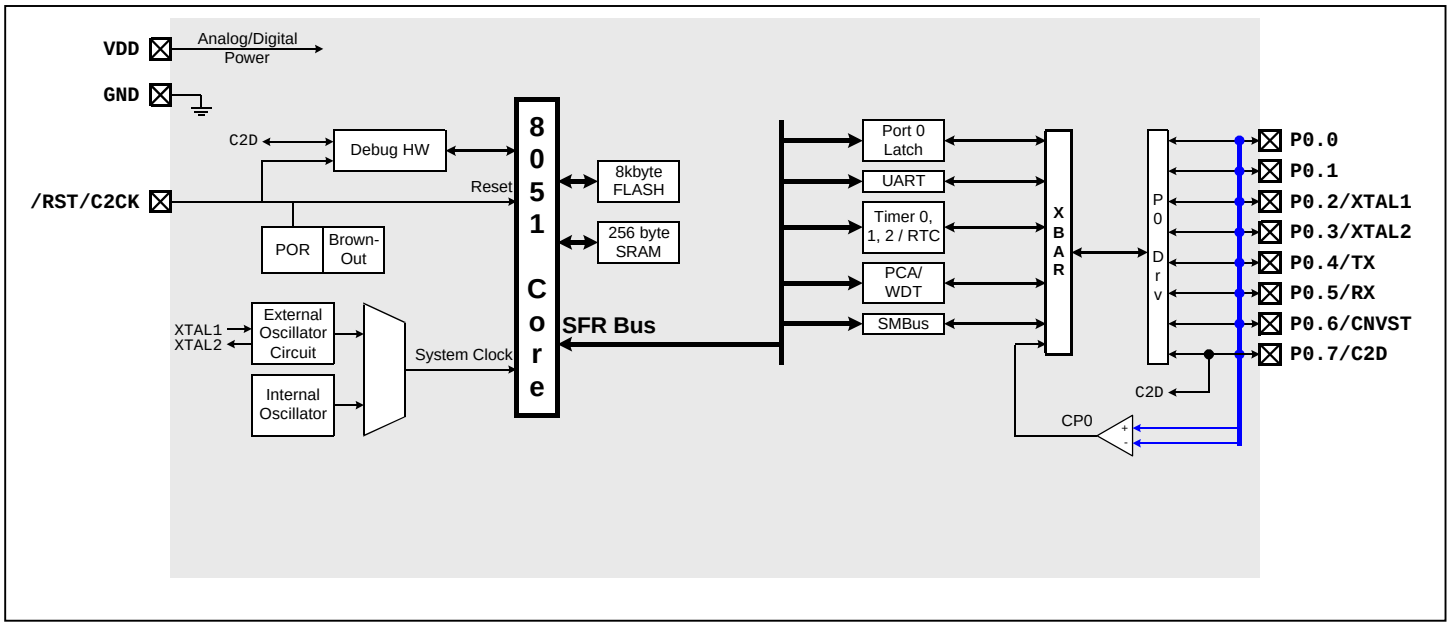

SELECTED ELECTRICAL SPECIFICATIONS T_A = -40°C to +85°C, VDD = 2.7V unless otherwise specified.

PARAMETER	CONDITIONS	MIN	TYP	MAX	UNITS
GLOBAL CHARACTERISTICS					
Supply Voltage		2.7		3.6	V
Supply Current with CPU active	Clock=25MHz Clock=1MHz Clock=32kHz; VDD Monitor Disabled		5.8 0.34 11		mA mA µA
Supply Current (shutdown)	Oscillator off; VDD Monitor Enabled Oscillator off; VDD Monitor Disabled		10 <0.1		µA µA
CPU & DIGITAL I/O PORTS					
Clock Frequency Range		DC		25	MHz
Port Output High Voltage	I_{OH} = -3mA, Port I/O push-pull	VDD – 0.7			V
Port Output Low Voltage	I_{OL} = 8.5mA			0.6	V
Input High Voltage		0.7 x VDD			V
Input Low Voltage				0.3 x VDD	V
INTERNAL OSCILLATOR					
Frequency		15.0	20.0	25.0	MHz
COMPARATOR					
Response Time Mode0	(CP+) – (CP-) = 100mV		0.1		µs
Current Consumption Mode0			7.6		µA
Response Time Mode1	(CP+) – (CP-) = 100mV		0.18		µs
Current Consumption Mode1			3.2		µA
Response Time Mode2	(CP+) – (CP-) = 100mV		0.32		µs
Current Consumption Mode2			1.3		µA
Response Time Mode3	(CP+) – (CP-) = 100mV		1		µs
Current Consumption Mode3			0.4		µA

PACKAGE INFORMATION

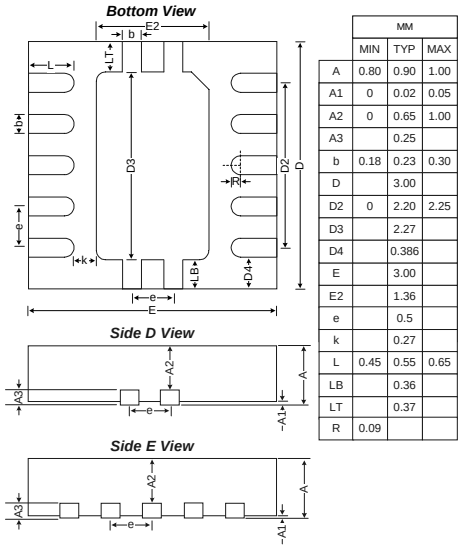

	MM		
	MIN	TYP	MAX
A	0.80	0.90	1.00
A1	0	0.02	0.05
A2	0	0.65	1.00
A3		0.25	
b	0.18	0.23	0.30
D		3.00	
D2	0	2.20	2.25
D3		2.27	
D4		0.386	
E		3.00	
E2		1.36	
e		0.5	
k		0.27	
L	0.45	0.55	0.65
LB		0.36	
LT		0.37	
R	0.09		

C8051F300DK DEVELOPMENT KIT

