Driver circuit for NMOS linear image sensor
C7884 series

High-precision driver circuit for current-output type NMOS linear image sensor

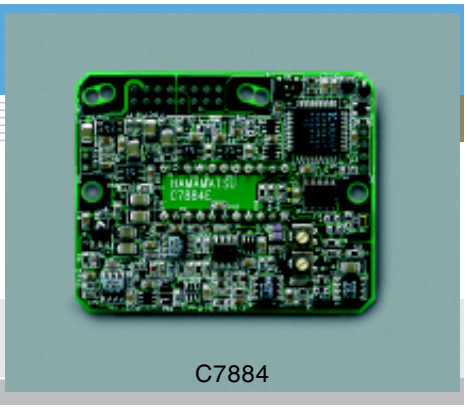
C7884

C7884 series is a driver circuit specifically designed for the Hamamatsu current-output type NMOS linear image sensors (S3901 to S3904 series, S8380/S8381 series). NMOS linear image sensors are self-scanning photodiode arrays integrated with a scanning circuit of N-channel MOS transistors.
C7884 series supplies start pulses and 2-phase clock pulses necessary for image sensor operation. C7884 series also includes a signal processing circuit to read out video signals from an image sensor in the electric charge accumulation mode.
C7884 series operates by input of a master start pulse, master clock pulse and connection to double power supply (±12 V or ±15 V).
C7884-20 and C7884-21 are multichannel detector heads incorporating driver circuit (C7884, C7884-01) developed for Hamamatsu NMOS linear image sensor. C7884-20 and C7884-21 are designed especially for compactness, having an overall length as short as 40 mm or less. The housing case also provides a shielding effect against external noise. As useful options, peripheral devices are available for driving C7884-20 and C7884-21, and for the output signal processing.

Features

- High-precision operation (compared to C7883 series)
- Low noise (compared to C7883 series)
- Compact (compared to conventional type C4070)
- Double power supply (±12 V or ±15 V) operation

■ Selection guide

Type No.	Product name	Feature
C7884	Driver circuit	High precision driver circuit for current-output type NMOS linear image sensors. Has no input/output connector.
C7884G	C7884 + Pulse generator	A dedicated pulse generator is pre-mounted on C7884 driver circuit board. Has no input/output connector.
C7884-01	Low noise driver circuit	Low noise driver circuit for current-output type NMOS linear image sensors. Has no input/output connector.
C7884G-01	C7884-01 + Pulse generator	A dedicated pulse generator is pre-mounted on C7884-01 driver circuit board. Has no input/output connector.
C7884-20	Multichannel detector head	C7884 driver circuit board is installed in a shield case.
C7884-21	Multichannel detector head	C7884-01 driver circuit board is installed in a shield case.

Note)
1: Standard input/output connector is FAP-16-07#2 (made by Yamaichi, sold separately). Equivalent connectors are available from other manufacturers.
2: Custom products with an input/output connector pre-mounted are available on request. Please consult our sales office.
3: When ordering along with a dedicated cable (A8226), C7884 series will be shipped with a mating connector pre-mounted.
4: We welcome custom requests (e.g. different supply voltage or gain). Feel free to contact our sales office.
5: When high-speed measurements are required, refer to C7883 series data sheet.
6: When using voltage-output type NMOS linear image sensors, refer to C7885 series data sheet.

SOLID STATE DIVISION

■ Specifications (Ta=25 °C)

Parameter			Symbol	Condition	Min.	Typ.	Max.	Unit
Supply voltage	Positive power supply		+Vs		+11.5	+12.0	+15.5	V
	Negative power supply		-Vs		+11.5	+12.0	+15.5	V
Current consumption	C7884	Positive power supply	+Is	+12 V	-	30	40	mA
		Negative power supply	-Is	-12 V	-	10	20	mA
	C7884G	Positive power supply	+Is	+12 V	-	60	80	mA
		Negative power supply	-Is	-12 V	-	10	20	mA
	C7884-01	Positive power supply	+Is	+12 V	-	20	30	mA
		Negative power supply	-Is	-12 V	-	10	20	mA
	C7884G-01	Positive power supply	+Is	+12 V	-	45	60	mA
		Negative power supply	-Is	-12 V	-	10	20	mA
	C7884-20	Positive power supply	+Is	+12 V	-	30	40	mA
		Negative power supply	-Is	-12 V	-	10	20	mA
	C7884-21	Positive power supply	+Is	+12 V	-	20	30	mA
		Negative power supply	-Is	-12 V	-	10	20	mA
Operation frequency		C7884 C7884-20	-	S3902/S3903 series, master clock frequency: 4 MHz	-	-	1	MHz
				S3901/S3904 series, master clock frequency: 2 MHz	-	-	500	kHz
		C7884-01 C7884-21	-	master clock frequency: 250 kHz	-	-	62.5	kHz
Gain			G		0.3			V/pC
Operating temperature			Topr		0 to +50 *			°C
Storage temperature			Tstg		-10 to +60 *			°C

* No condensation

■ Timing chart

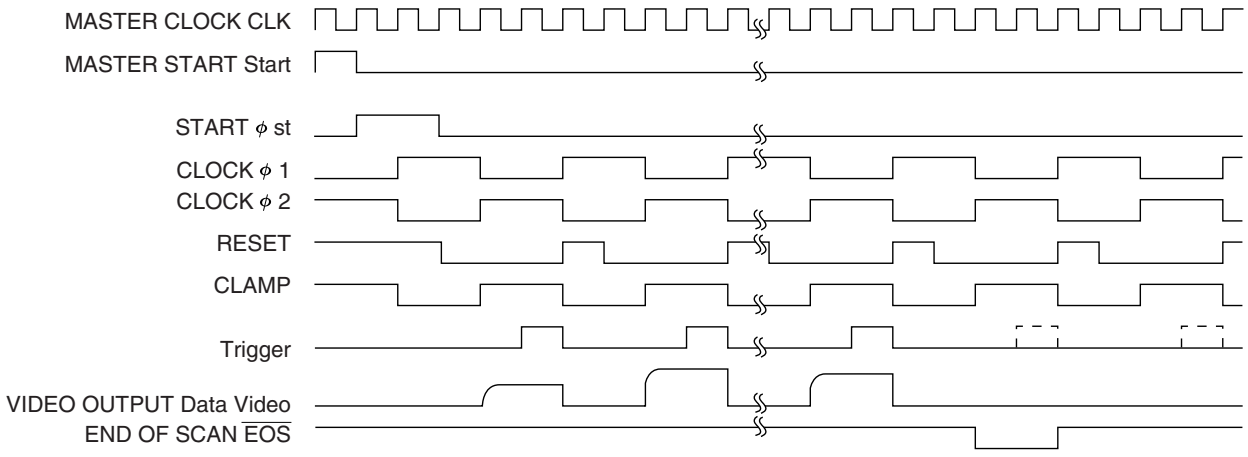

KACCC0119EA

■ Dimensional outlines and input/output signal descriptions (unit: mm)

C7884, C7884-01

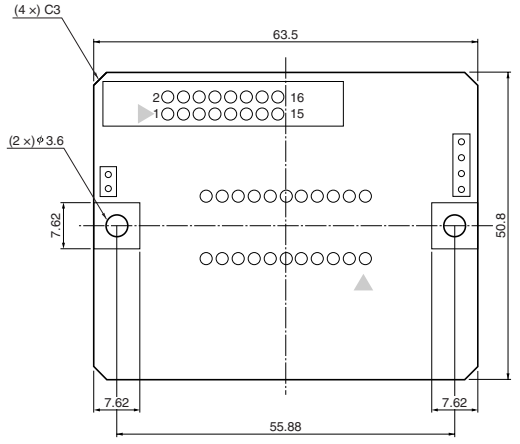

KACCA0086EA

C7884G, C7884G-01

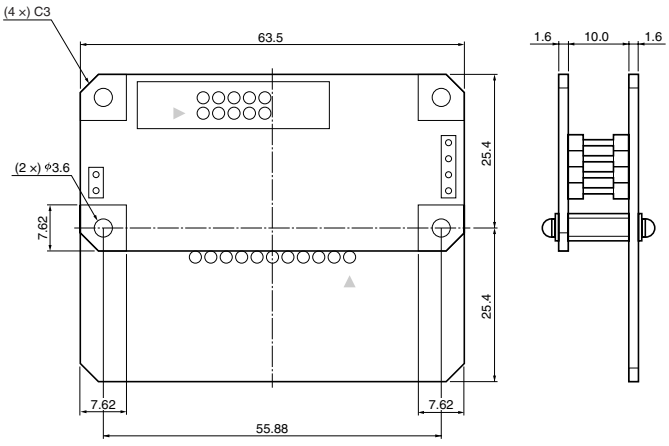

KACCA0106EA

Terminal No.	Terminal name	Description
1	A. GND	Analog ground
2	+12 V or +15 V	Power supply
3	A. GND	Analog ground
4	-12 V or -15 V	Power supply
5	A. GND	Analog ground
6	Data Video	Analog video signal output; positive polarity
7	A. GND	Analog ground
8	A. GND	Analog ground
9	D. GND	Digital ground
10	$\overline{\text{EOS}}$	Digital output signal indicating end of scan; negative logic
11	D. GND	Digital ground
12	Trigger	Digital output signal for A/D conversion; positive logic
13	D. GND	Digital ground
14	CLK	Digital input signal for operating the circuit at the rising edge (in case of C7884G, C7884G-01, output signal)
15	D. GND	Digital ground
16	Start	Digital input signal for initializing the circuit; positive logic. (in case of C7884G, C7884G-01, output signal) Interval of these pulses equals the integration time of the sensor.

C7884-20/-21

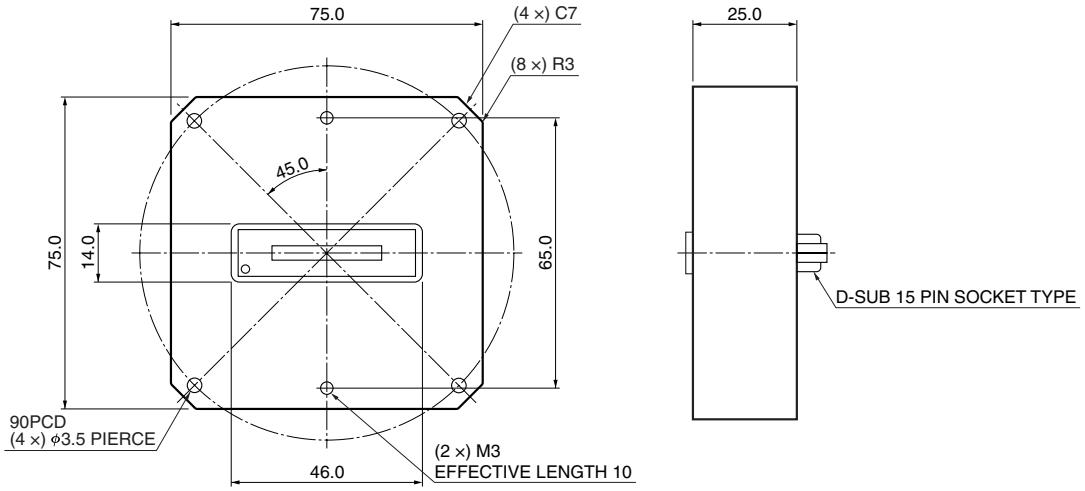

KACCA0112EA

Terminal No.	Terminal name	Description
1	NC	No connection
2	Data video	Analog video signal output; positive polarity
3	+12 V (+15 V)	Positive power supply
4	-12 V (-15 V)	Negative power supply
5	NC	No connection
6	Start	Digital input signal for initializing the current; positive logic
7	CLK	Digital input signal for operating the circuit at the rising edge
8	$\overline{\text{EOS}}$	Digital output signal indicating end of scan; negative logic
9	A. GND	Analog ground
10	A. GND	Analog ground
11	Shield	Case shield
12	D. GND	Digital ground
13	D. GND	Digital ground
14	D. GND	Digital ground
15	Trigger	Digital output signal for A/D conversion; positive logic

■ Pin assignment of “Signal I/O” connector (C7884-20/-21, 15 pin D-sub socket type)

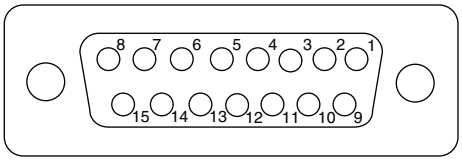

KACCC0069EA

Dedicated cable A8226

Connector on board: UFS-16B-01
Input/output signal connector: BNC (Start, CLK, Trigger, EOS, Data Video)
Power supply: lose wire cable
Cable length: 1 m

Note) When making a simple in-circuit evaluation of NMOS linear image sensors without any troublesome soldering, use C7883G, C7884G, C7884G-01 or G7885G in combination with A8226.
All you have to do is just insert an NMOS linear image sensor into the socket and connect the cables to an oscilloscope, power supply and AD converter. Note that NMOS linear image sensors are sold separately.

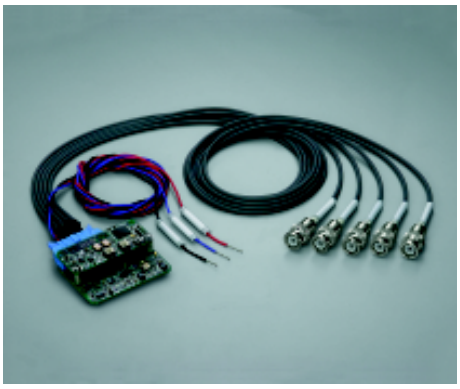

C7884G used in combination with A8226

HAMAMATSU Information furnished by HAMAMATSU is believed to be reliable. However, no responsibility is assumed for possible inaccuracies or omissions.
Specifications are subject to change without notice. No patent rights are granted to any of the circuits described herein. ©2002 Hamamatsu Photonics K.K.

HAMAMATSU PHOTONICS K.K., Solid State Division
1126-1 Ichino-cho, Hamamatsu City, 435-8558 Japan, Telephone: (81) 053-434-3311, Fax: (81) 053-434-5184, http://www.hamamatsu.com
U.S.A.: Hamamatsu Corporation: 360 Foothill Road, P.O.Box 6910, Bridgewater, N.J. 08807-0910, U.S.A., Telephone: (1) 908-231-0960, Fax: (1) 908-231-1218
Germany: Hamamatsu Photonics Deutschland GmbH: Arzbergerstr. 10, D-82211 Herrsching am Ammersee, Germany, Telephone: (49) 08152-3750, Fax: (49) 08152-2658
France: Hamamatsu Photonics France S.A.R.L.: 8, Rue du Saule Trapu, Parc du Moulin de Massy, 91882 Massy Cedex, France, Telephone: 33-(1) 69 53 71 00, Fax: 33-(1) 69 53 71 10
United Kingdom: Hamamatsu Photonics UK Limited: 2 Howard Court, 10 Tewin Road, Welwyn Garden City, Hertfordshire AL7 1BW, United Kingdom, Telephone: (44) 1707-294888, Fax: (44) 1707-325777
North Europe: Hamamatsu Photonics Norden AB: Smidesvägen 12, SE-171 41 Solna, Sweden, Telephone: (46) 8-509-031-00, Fax: (46) 8-509-031-01
Italy: Hamamatsu Photonics Italia S.R.L.: Strada della Moia, 1/E, 20020 Arese, (Milano), Italy, Telephone: (39) 02-935-81-733, Fax: (39) 02-935-81-741

Cat. No. KACC1075E01
Apr. 2002 DN