T-BERD®/MTS-4000 Multiple Services Test Platform

Triple-Play Services Software Option



Key Features

- **Video service (IPTV) testing**
  - **IP Multicast test (broadcast video service): Generate IGMP Join and Leave requests to verify the functionality of stream flows, channel changes, and multi-cast communications**
  - **IP Unicast test (video on demand [VoD] service): Generate RTSP client requests for access to VoD media server to verify the functionality of program stream flows and uni-cast communications**
  - **Decode and display I-Frame**
- **Voice service (VoIP) testing**
  - **Emulate a VoIP phone for service turn-up and troubleshooting**
  - **Supports Cisco SCCP, SIP, MGCP, H.323, and Nortel Unistim signaling protocols**
- **Data services testing**
  - **Provides a fully integrated Web browser**
  - **Offers Throughput testing (FTP, HTTP)**

Applications

- Tests IPTV video quality, including analysis of video streams and packet statistics on up to 10 streams in Monitor Mode and 6 streams in Terminate Mode, including video mean opinion score (VMOS)
- Assesses VoIP packet quality and voice quality rating using MOS and R-Factor
- Tests data services, including ping, trace route, and Web browser functions from a 10/100/1000 Ethernet port or optional xDSL modules
- Scans the virtual local area network (VLAN) for current configuration and activity

The JDSU T-BERD/MTS-4000 equipped with the Triple-Play Software option delivers comprehensive Internet Protocol (IP) service-level testing in a rugged, handheld, battery-operated platform that is ideal for Access and Home network turn-up, troubleshooting, and maintenance.

The growth of triple-play services has changed the landscape of the telecommunications industry through the creation of new opportunities, while also introducing significant challenges for service providers. To remain competitive, providers must efficiently deploy bundled voice, video, and data to the exacting demands of customers—delivering on both quality of service (QoS) and experience (QoE), while reducing operating expenses.

The T-BERD/MTS-4000 meets these challenges and more as the first multi-application platform with fully integrated copper and fiber functionality that addresses the complete set of requirements for triple-play, such as turn-up, troubleshooting, and maintenance. The T-BERD/MTS-4000 Triple-Play Services Software gives field service technicians who install and maintain triple-play service over leading-edge fiber- and copper-based digital subscriber line (DSL) Access networks a complete suite of essential testing tools in one unit.

Flexible connectivity, including universal serial bus (USB), high-speed 10/100/Gigabit Ethernet (GigE), Wireless Fidelity (WiFi), and Bluetooth, interfaces make downloading software and offloading captured test data easier, thus increasing productivity and baseline network performance.

Architecture

The T-BERD/MTS-4000 is designed for skilled field technicians who install and maintain various next-generation fiber (FTTx) networks delivering triple-play services that often require advanced troubleshooting, including in-depth physical layer tests on copper or fiber—or increasingly both.

Layered Graphical User Interface

The figure below shows the JDSU Quality Layer Model integrated into the T-BERD/MTS-4000 graphical user interface (GUI) to enhance root-cause analysis. Technicians can use it to locate IP service problems more easily and quickly.

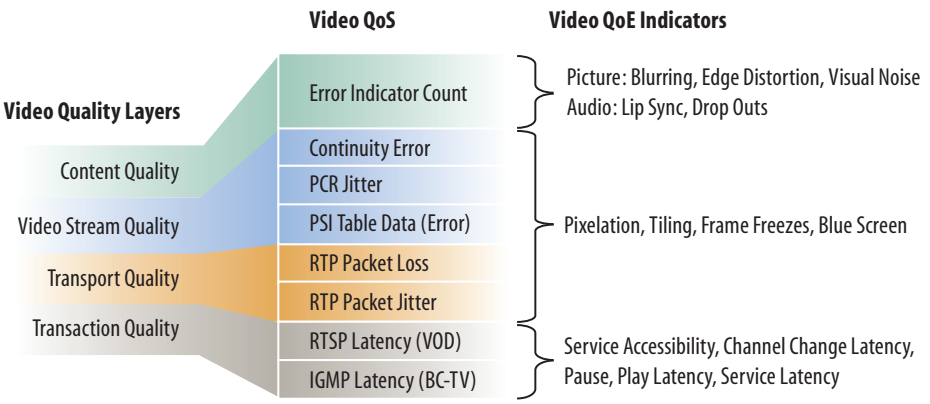

Figure 1: JDSU Quality Layer Model

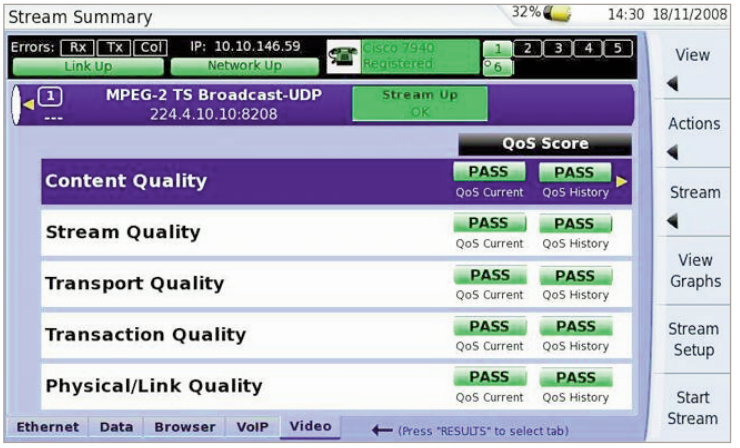

Figure 2: Example of Video test results using the T-BERD/MTS-4000 GUI with the JDSU Quality Layer Model

3

The Triple-Play Software Option for the T-BERD/MTS-4000 installed on the base unit can be used with the resident Ethernet (10/100/Gig E) port. It is compatible with field-swappable T-BERD/MTS-4000 xDSL interface modules.

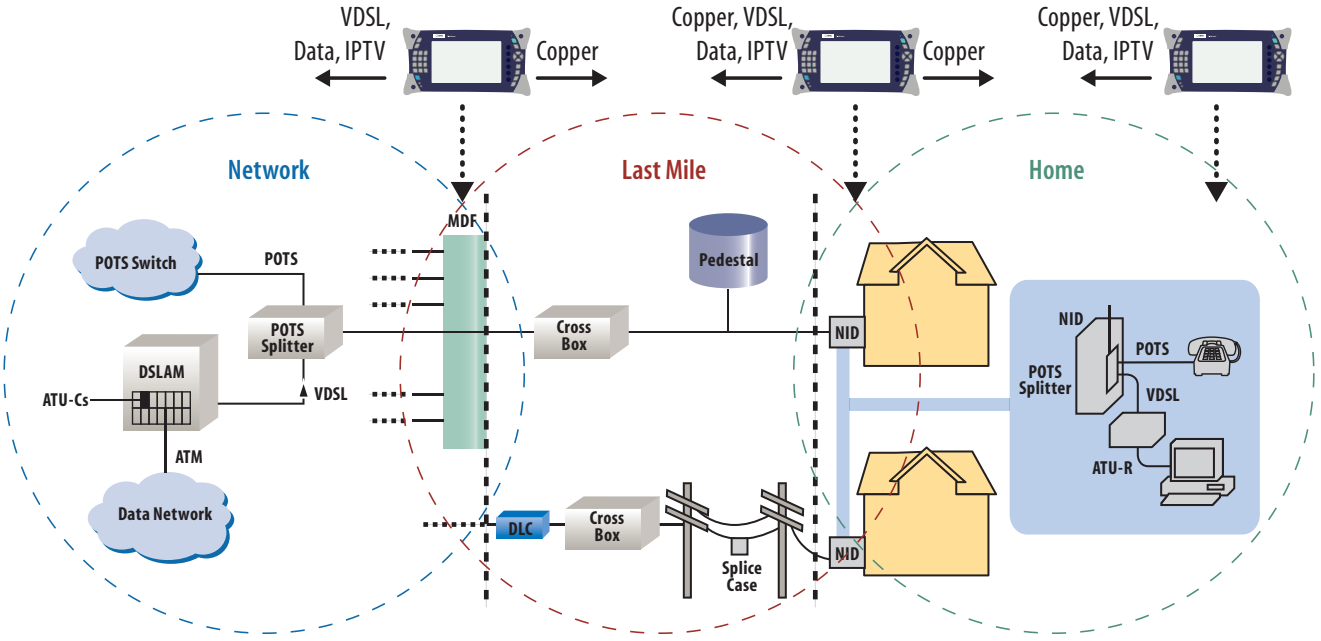

Figure 3: Example of a typical DSL architecture

Applications

The T-BERD/MTS-4000 provides the full range of capabilities needed to test today's leading-edge FTTx and copper access networks plus the expandability needed to test next-generation networks. The wide range of testing technologies offered by the T-BERD/MTS-4000 provide all of the testing functions that technicians need at every stage of the network lifecycle, from the physical layer to the application layer, in a single handheld and rugged unit.

The T-BERD/MTS-4000 delivers an integrated approach to field testing with test support for specific application use cases. Field-swappable modules are available for multi-service testing and two modules can run simultaneously.

IP Video Testing

The T-BERD/MTS-4000 enables analysis of the video service (IPTV) stream anywhere in the Access network using a DSL or Ethernet interface. With its advanced performance monitoring features, the T-BERD/MTS-4000 accurately measures video QoS and QoE using built-in tests for content, transport, transaction, and physical link quality.



Figure 4: Example of IPTV Video Stream test



Figure 5: Example of IPTV Summary test screen

VoIP Testing

Technicians can use the T-BERD/MTS-4000 to turn up and troubleshoot voice service (voice over IP [VoIP]) connectivity, feature availability, and voice quality. They can also conduct IP ping, packet statistic, and trace route analysis to identify, diagnose, and sectionalize VoIP network and equipment problems.

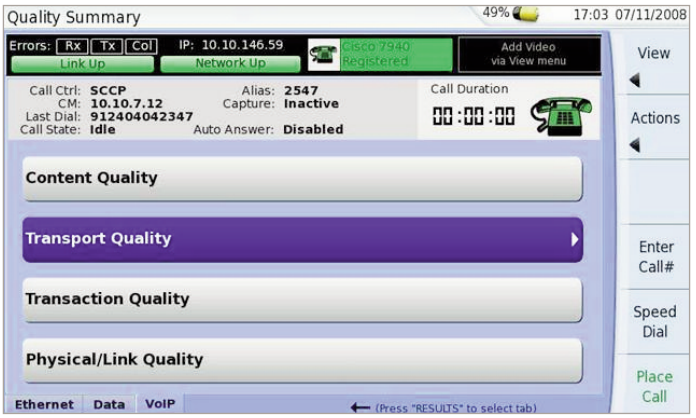

Figure 6: VoIP test interface

IP Data Testing

The T-BERD/MTS-4000 enables Internet connectivity testing using an integrated Web browser and also performs required IP data tests (such as IP ping delay) to verify bandwidth requirements for real-time applications and services (such as online gaming and streaming video).



Figure 7: IP Ping test interface

CoS Testing

With its advanced test capabilities that address each triple-play application QoS metric, the T-BERD/MTS-4000 let carriers focus on effective Class of Service (CoS) testing to ensure priority mapping for IP services. All three applications can be run at the same time simulating mixed traffic flows. Interactions that violate CoS rules can be identified quickly.

The Right Tool for Today's Triple-Play Tests

The lightweight, rugged, and battery-operated T-BERD/MTS-4000 cost-effectively scales to provide an all-in-one solution for field installation, maintenance, and troubleshooting across a wide range of test applications for copper, fiber, and triple-play services. With automation features, such as auto tests, custom scripts, work flow ticket support, and flexible connectivity that improve workforce efficiency, the T-BERD/MTS-4000 is ideally suited to optimize even the most complex and advanced FTTx networks.



7

Specifications

Test Ports/Interface Support

10/100/1GigE (configurable—half/full duplex auto detect), RJ45

Optional ADSL1/2/2+, VDSL1/2 (modem port 8-pin modular—line on center pins, Tip-Ring connections)

Cable Test CAT 3/5

TDR Results

Fault type open/short

Distance to fault

GigE Results

Polarity

Skew

Ethernet Data

Media Type

Auto, 10/100/1000 Mb/s full, half duplex

Data Modes

IPoE, PPoE, data off

IP Mode

DHCP, static

MAC Setting

Factory default, user-defined

VLAN

Tag on/off

ID selection 0–4095

Priority selection 0–7

Web Browser

On/Off

Reported Results—Ethernet TE

Ethernet Statistics

Link status, link speed, link duplex detection

TX collisions, TX/RX (bytes, frames, errors, dropped frames)

LAN/WAN Results

IP address, Net mask, gateway, DNS, MAC address

PING ICMP and UDP Statistics

Echoes sent/received, PING delay (Cur/Avg/Max/Min), lost count/percentage

Supports IP address or DNS name destination

Trace Route ICMP and UDP Statistics

Hop count, name lookup, and IP address of hops

Supports IP address and DNS address destination

FTP/HTTP

Upload/download rate, transfer count, time

VLAN scan

VLAN, priority, frame count, last seen

VoIP Specifications

Supported Signaling Protocols

H.323 ITU-T H.323 version 3 Fast Connect

H.323 ITU-T H.323 version 3 Full Connect (MSD, CAPSET, OLC exchange)

Skinny Cisco Client Protocol (SCCP)

SIP RFC 3621

Nortel Unistim

MGCP

Supported Codec Configuration

ITU-T G.711 u-law/A-law (PCM/64 kb/s)

ITU-T G.723.1 (ACELP/5.3, 6.3 kb/s)

ITU-T G.726 (ADPCM/32 kb/s)

ITU-T G.729a (GS-ACELP/8 kb/s)

ITU-T G.722 64K

ITU-T H.261 video conferencing

ITU T H.263 video conferencing

User-selectable silence suppression, jitter buffer, and voice packet size

User-selectable transmit source (live voice conversation, tone transmit (200-5 kHz), pre-recorded wave file (up to 2 Mb)

LAN Settings

User-selectable calling alias

User-selectable IP address, static or DHCP

User-selectable subnet mask, gateway, and DNS server

User-selectable or default MAC address VLAN configurable—IEEE.802.1p/q

Configurable IP TOS

Gatekeeper Settings

User-selectable static/auto discovery, or no gatekeeper direct connect mode

Supports inbound and outbound calls with or without gatekeeper support

Reported Results—VoIP

Call Stats

Full incoming call statistics, including IP address, far-end alias, far-end name, RTCP availability/ports, codec and rate, call signaling support, silence suppression enabled, and call duration

Throughput Audio/Video

Sent/received in bytes and packets, out-of-sequence packets, remote packets

Voice Stream Timeline

Packet delay, packet jitter, packet loss, overall QoS

Incoming Delay

Network, encoding, packetization, buffering, and total delay

Content Quality

Call quality R-Factor	Current/Min/Max/Average
Line quality R-Factor	Current/Min/Max/Average
R-Factor G.107	Current/Min/Max/Average
R-Factor burst	Current/Min/Max/Average
R-Factor gap	Current/Min/Max/Average
CQ MOS	Current/Min/Max/Average
LQ MOS	Current/Min/Max/Average
PQ MOS	Current/Min/Max/Average

Transport Quality

Audio jitter	Current/Min/Max/QoS History
Audio packets lost	Current/Min/Max/QoS History
Audio overall QoS	Current/Min/Max/QoS History

Voice and video quality rating based on packet metrics thresholds set by user MOS rating, R-Factor, and voice degradation factors support packet capture and filtering (save internally or to USB mass memory storage)

JDSU

T-BERD/MTS-4000 TRIPLE-PLAY SERVICES SOFTWARE OPTION

Specifications

IP Video Specifications

Modes
Terminate, Monitor, Through

Set Top Box Emulation
IGMPv2 and v3 emulation client
IGMP message status/decode status/error message
RTSP emulation client

Service Selection
Broadcast video-UDP
Broadcast video-RTP
VOD-RTSP-UDP
ISMA broadcast
ISMA VOD (RTSP-UDP)
ISMA VOD (TTSP-TCP)
Rolling stream-R-RTP/UDP

Video Source Address Selection
IP address and port number
IP address, port number, and VOD URL extension
RTSP port select
RTSP vendor select

Multiple ATM VC Setup Selection
Virtual channels with simultaneous usage
Selectable TX peak cell rate (PCR) for signaling channel

Video Analysis is Per Video Stream
Simultaneous stream support — 6 Terminate, 10 Monitor

IP Packet Analysis
Total packets RX count
Jitter current/max
RTP packets lost, count
RTP OOS, count
RTP errors, count

PID Analysis (each stream)
PID number
PID type (video, audio, data, unknown)
PID description

Summary Statistics

Terminate active stream count	1-6
Monitor active stream count	1-10
Data rates combined	Current/Ave/Min/Max

QoS

Error indicator count	
Continuity error event count	Current/Max
Continuity error event percentage	Current/Max
PCR jitter	
Current/Max ms	
IGMP latency	ms
RSTP latency	ms
QoS score	
(Pass/Fail threshold selections)	

Graphs
Packet loss
QoS timeline
Jitter

Content Quality
PID, class, description
Error indicator count
Service name
Program name
Video MOS
R-Factor
Degradation (loss, discard, codec)

Stream Quality

Sync errors	Count
Continuity errors	Current/Average/Min/Max
Continuity errors %	Current/Average/Min/Max
PCR jitter	Count
PID timeouts	Count
PAT errors	Count
PMT errors	Count

Video Stream Data Rates

Total	Current/Average/Min/Max
IP	Current/Average/Min/Max
Video	Current/Average/Min/Max
Audio	Current/Average/Min/Max
Data	Current/Average/Min/Max
Unknown	Current/Average/Min/Max
All streams	Current/Average/Min/Max

Transport Quality

MDI delay factor	Current/Average/Max
MDI MLR	Current/Average/Max/Total
MDI buffer size	Current/Average/Max
RTP jitter	Current/Max
Lost packets	Current/Average/Max
RTP packet loss	Distance Errors Threshold/Current/Max/Total
	Period Errors Threshold/Current/Max/Total

Error Logging
Timestamp for error events

QoS state changes	Pass to Fail, Fail to Pass

Signaling Protocol Message Decode:
IGMP Messages
RTSP Messages
500 Message FIFO Buffer Storage—File Export

Standards

RFC2236, IGMP	RFC2326, RTSP
ISO (IEC 13818), Video Transport Steam and Analysis	ETSI TR 10-290 V2.1, Video Measurements
TFC-1483; 2684, ATM AAL5	RFC2364, PPPoAAL5
RFC4445, Media Delivery Index (MDI)	

Ordering Information

Triple-Play Software Options

C4000-VOIP	Standard VOIP
C4000-VOIP-CISCO	Cisco Call Manager
C4000-VOIP-UNISTIM	Nortel Unistim Call Manager
C4000-IPTV	Standard IPTV
C4000-CABLDIAG	Cable Diagnostics

Test & Measurement Regional Sales

NORTH AMERICA
TOLL FREE: 1 866 228 3762
FAX: +1 301 353 9216

LATIN AMERICA
TEL: +1 954 688 5660
FAX: +1 954 345 9216

ASIA PACIFIC
TEL: +852 2892 0990
FAX: +852 2892 0770

EMEA
TEL: +49 7121 86 2222
FAX: +49 7121 86 1222

www.jdsu.com/test

Product specifications and descriptions in this document subject to change without notice. © 2009 JDS Uniphase Corporation
30162663 000 0109 4000TPS.DS.TFS.TM.AE January 2009