Power Inductors
CZ Series

Coils, Transformers

OUTLINE

Low-height, and high current power inductor used in digital devices and mobile phones. Several dimensions are available.

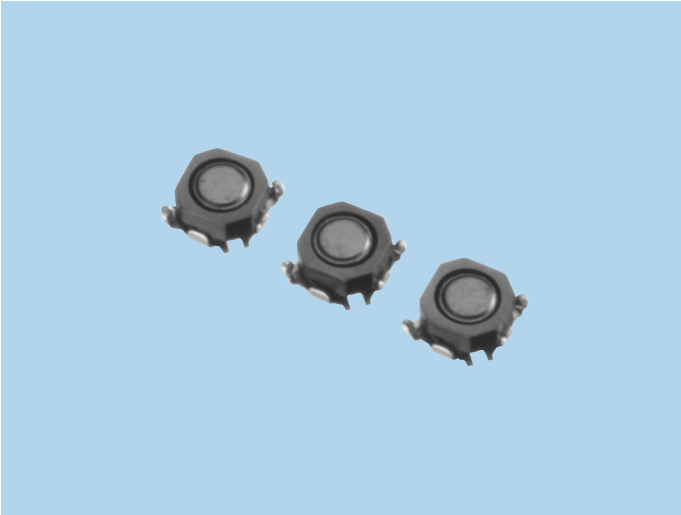

FEATURES

1. Non-solder product by laser welding.
2. Impact-resistant structure with wider terminals.
3. High current performance.

APPLICATIONS

For digital equipment (DSC, DVC, PDA) and mobile phones.

• Any products mentioned in this catalog are subject to any modification in their appearance and others for improvements without prior notification.
• The details listed here are not a guarantee of the individual products at the time of ordering. When using the products, you will be asked to check their specifications.

SPECIFICATIONS

Type	Size (mm)	Height (mm)	Inductance (μH)	DC Resistance (mΩ)	Rated DC Current (A) typ.	
					L=-10%	⊿T=25K
C3-Z1.2R	3.0×3.0	1.2max.	1.2～10	90～450	0.33～0.85	0.55～1.05
C3-Z1.5R		1.5max.	2.2～22	90～800	0.25～0.80	0.30～1.00
C3-Z1.8R		1.8max.	2.2～47	85～1,150	0.23～1.00	0.25～1.10

* 3,000Pcs/Reel

DATA LIST (C3-Z Series)

C3-Z1.2R (Height : 1.2mm max.)

Item	Stamp	Inductance			DCR (mΩ) typ.	Rated DC Current (A) typ.	
		(μH)	Tolerance (%)	(kHz)		L=-10%	⊿T=25K
DB	1R	1.2	±30	1kHz	90	0.85	1.05
DE	2R	2.2	±30	1kHz	130	0.70	0.90
DG	3R	3.3	±30	1kHz	160	0.60	0.82
DJ	4R	4.7	±30	1kHz	240	0.50	0.72
DK	5R	5.6	±30	1kHz	300	0.46	0.67
DL	6R	6.8	±30	1kHz	375	0.43	0.62
DM	8R	8.2	±30	1kHz	400	0.38	0.58
EA	10	10	±20	1kHz	450	0.33	0.55

• Any products mentioned in this catalog are subject to any modification in their appearance and others for improvements without prior notification.
• The details listed here are not a guarantee of the individual products at the time of ordering. When using the products, you will be asked to check their specifications.

C3-Z1.5R (Height : 1.5mm max.)

Item	Stamp	Inductance			DCR (mΩ) typ.	Rated DC Current (A) typ.	
		(μH)	Tolerance (%)	(kHz)		L=-10%	⊿T=25K
DE	2R	2.2	±30	1kHz	90	0.80	1.00
DG	3R	3.3	±30	1kHz	140	0.70	0.90
DJ	4R	4.7	±30	1kHz	200	0.60	0.85
DK	5R	5.6	±30	1kHz	220	0.55	0.80
DL	6R	6.8	±30	1kHz	240	0.52	0.77
DM	8R	8.2	±30	1kHz	350	0.48	0.72
EA	10	10	±20	1kHz	400	0.45	0.70
EB	12	12	±20	1kHz	450	0.40	0.65
EC	15	15	±20	1kHz	600	0.35	0.50
ED	18	18	±20	1kHz	680	0.30	0.40
EE	22	22	±20	1kHz	800	0.25	0.30

C3-Z1.8R (Height : 1.8mm max.)

Item	Stamp	Inductance			DCR (mΩ) typ.	Rated DC Current (A) typ.	
		(μH)	Tolerance (%)	(kHz)		L=-10%	⊿T=25K
DE	2R	2.2	±30	1kHz	85	1.00	1.10
DG	3R	3.3	±30	1kHz	120	0.90	1.00
DJ	4R	4.7	±30	1kHz	170	0.75	0.90
DK	5R	5.6	±30	1kHz	195	0.70	0.85
DL	6R	6.8	±30	1kHz	210	0.65	0.82
DM	8R	8.2	±30	1kHz	265	0.55	0.78
EA	10	10	±20	1kHz	290	0.50	0.75
EB	12	12	±20	1kHz	420	0.48	0.65
EC	15	15	±20	1kHz	465	0.45	0.55
ED	18	18	±20	1kHz	550	0.40	0.50
EE	22	22	±20	1kHz	630	0.38	0.45
EF	27	27	±20	1kHz	770	0.33	0.40
EG	33	33	±20	1kHz	930	0.30	0.33
EH	39	39	±20	1kHz	1,050	0.25	0.28
EJ	47	47	±20	1kHz	1,150	0.23	0.25

• Any products mentioned in this catalog are subject to any modification in their appearance and others for improvements without prior notification.
• The details listed here are not a guarantee of the individual products at the time of ordering. When using the products, you will be asked to check their specifications.

DIMENSIONS

C3-Z1.2R

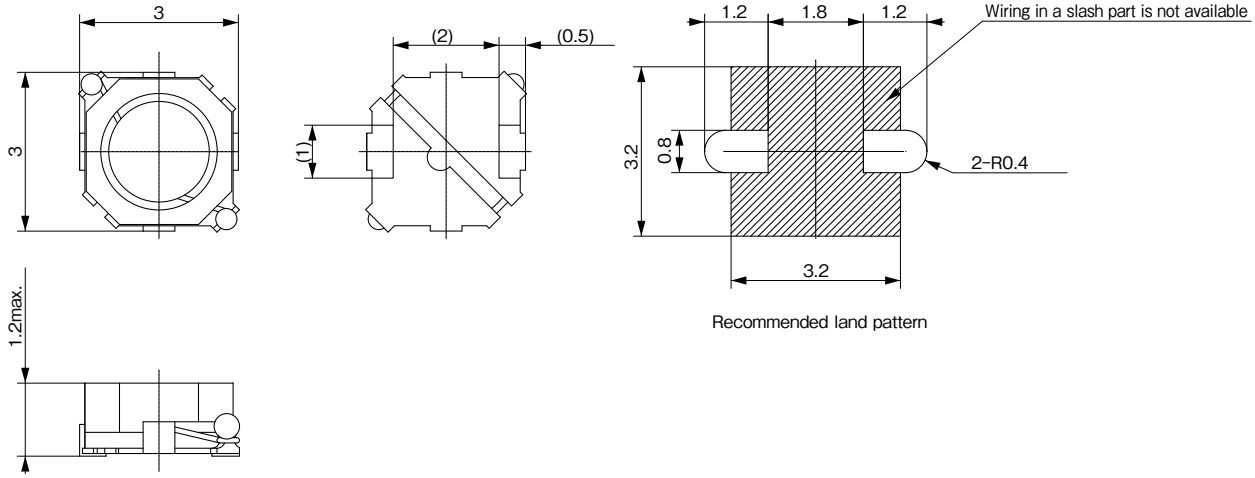

Recommended land pattern

C3-Z1.5R

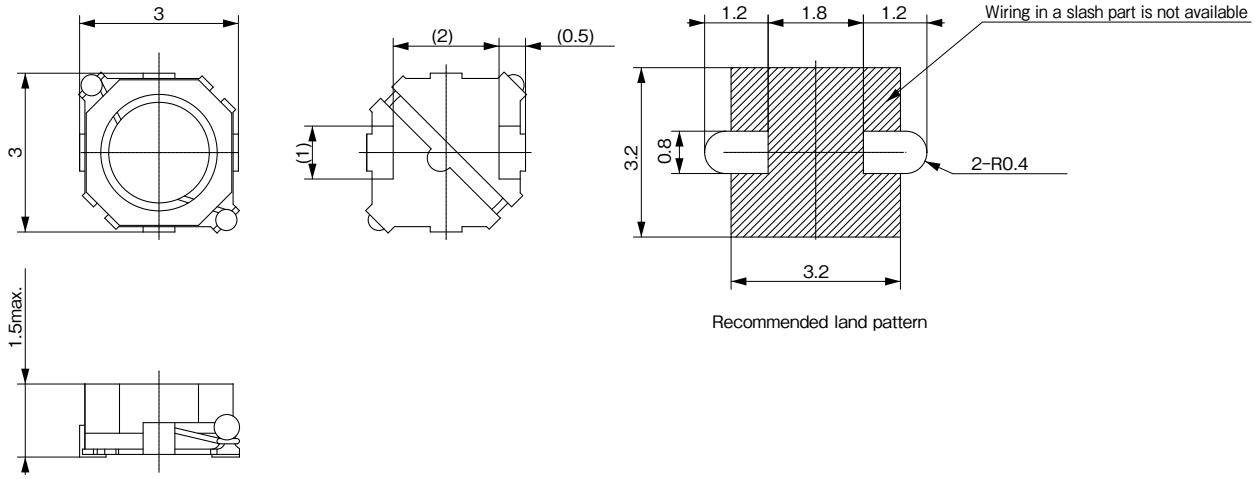

Recommended land pattern

C3-Z1.8R

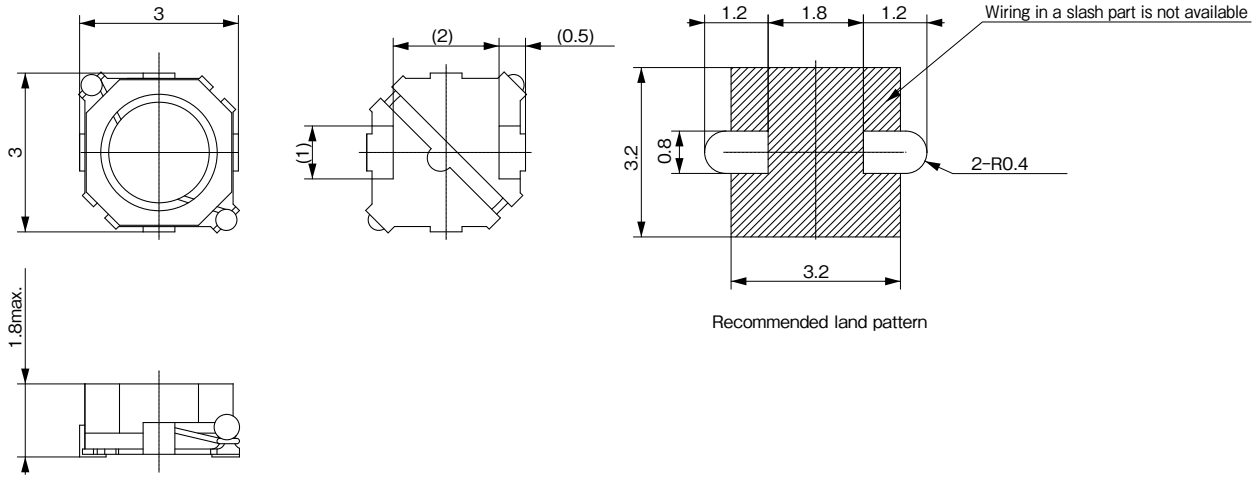

Recommended land pattern

Unit : mm
Tolerance : ±0.2

• Any products mentioned in this catalog are subject to any modification in their appearance and others for improvements without prior notification.
• The details listed here are not a guarantee of the individual products at the time of ordering. When using the products, you will be asked to check their specifications.